30. Hot Stack Flashing Curb

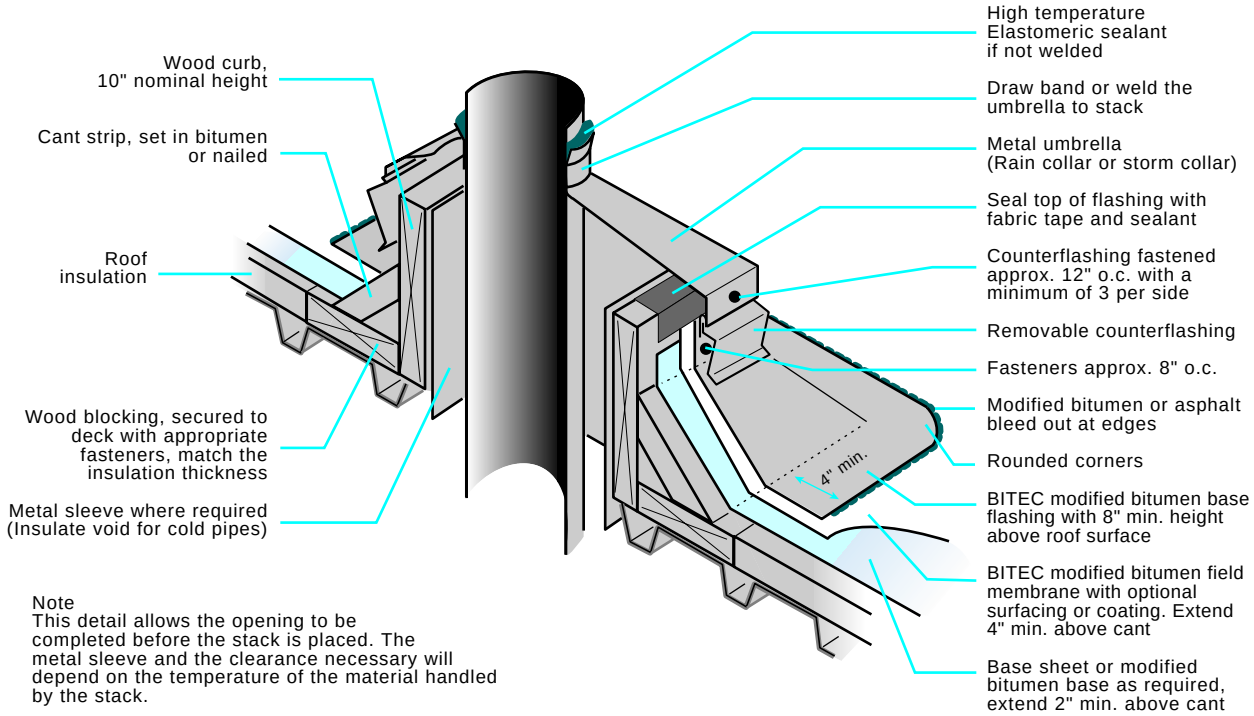

Note
This detail allows the opening to be completed before the stack is placed. The metal sleeve and the clearance necessary will depend on the temperature of the material handled by the stack.

31. Piping Through Roof Deck

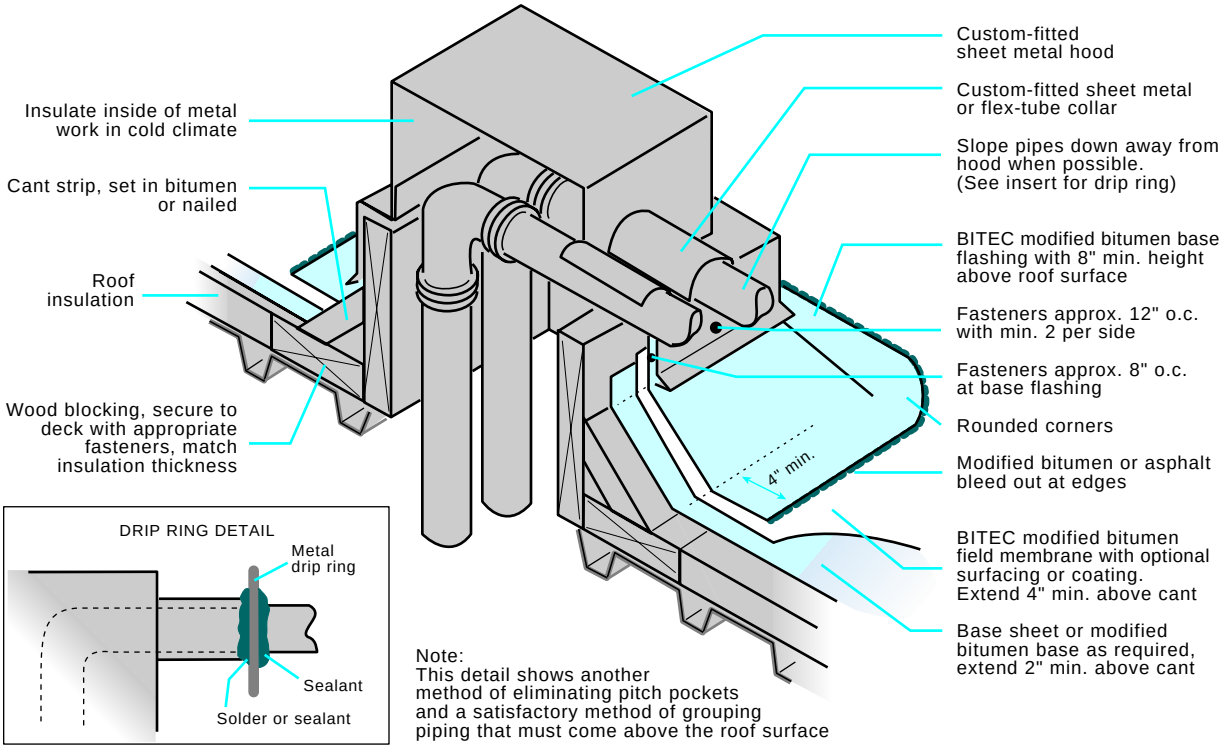

Note:
This detail shows another method of eliminating pitch pockets and a satisfactory method of grouping piping that must come above the roof surface