CEMCO™

Steel Framing and Metal Lath

STEEL FRAMING AND ACCESSORIES CATALOG

ICC ES™ *ICC ES ESR-3016*

2009 & 2012 IBC, IRC

www.cemcosteel.com

CSSA Certified Steel Stud Association

CEMCO™
Steel Framing and Metal Lath

Section	Pages

Introduction to CEMCO 3

Product Identification 4-5

LEED Certification 6

General Product Information 7-8

Section Properties for Structural Studs and Tracks 9-14

Allowable Heights for Curtain Walls 15-19

Wall Bracing Options 20

Combined Axial and Lateral Load Tables 21-64

Floor Joist Bridging and Bracing Notes 65

Floor Joist Span Tables 66-70

Web Crippling Notes 71

Web Crippling Load Tables 72

Ceiling Span Tables 73-74

Header Loads 75-77

Section Properties and Ceiling Spans for U-Channels 78

Section Properties, Ceiling Spans for Hat Channels 79

Map of CEMCO Facilities ..... Back Cover

CEMCO™

Steel Framing and Metal Lath

California Expanded Metal Products Co. Inc., commonly known as CEMCO, was founded in 1974. CEMCO is the leader in quality, service, and product development, always striving to deliver the cutting-edge solutions that save both time and money during the entire construction process. Our commitment to quality control and the use of mill-certified prime steel ensures stellar product performance long after the project is finished.

CEMCO manufactures all of our products in the USA in each of our four state-of-the-art facilities located in City of Industry, CA, Pittsburg, CA, Denver, CO, and Ft. Worth, TX.

CEMCO is one of the few manufacturers to produce all of our products from high quality mill-certified PRIME hot-dipped galvanized steel. Our products are manufactured to the stringent tolerances established by the American Iron and Steel Institute, and the most recent IBC, IRC, and CBC Building Codes.

We are proud to offer one of the broadest product lines available in the cold-formed steel-framing industry. Each of our products has been manufactured here in the USA, and typically qualifies for credits in the Leadership in Energy and Environmental Design program, commonly known as LEED. Our metal lath, plastering accessories, and water management products are manufactured to handle both interior and exterior applications. Like all CEMCO products, they're produced from high-quality, mill-certified hot-dipped galvanized PRIME steel to guarantee proper performance long after the finish coat is applied.

With our state-of-the-art facilities, CEMCO can handle any size construction project. We distribute products throughout the United States, Canada, Mexico, and the Pacific Rim. Our products are available only through building material dealers, who work closely with contractors on technical assistance, specifications and submittals.

All of our CEMCO literature, product data, and catalog information are located on our website at www.cemcosteel.com.

DISCLAIMER

All data, specifications, and details contained in this publication are intended as a general guide for using CEMCO cold-formed steel framing products and accessories. These products are not to be used in design or construction without an independent evaluation by a licensed and qualified engineer or architect to verify the suitability of a particular product for use in a specific application. CEMCO and its entities assume no liability for failure resulting from the use or misapplication of computations, detail drawings, and specifications contained herein. This publication contains the latest information available at the time of printing. CEMCO and its entities reserve the right to make changes or modifications to the materials of any of its products without out prior notice or obligation. Contact CEMCO at 800-775-2362 or www.cemcosteel.com for the latest information on these or any other CEMCO products.

CEMCO™
Steel Framing and Metal Lath

Introduction To CEMCO Nomenclature

CEMCO and other industry leaders have developed a four part identification code which identifies the size (both depth, and flange width), style, and material thickness of each member.

Example:

MEMBER DEPTH:
(Example: 6" = 600 x 1/100 inches)
All member depths are taken in 1/100 inches.
For all "T" sections, member depth is the Inside to inside dimension.

FLANGE WIDTH:
(Example: 1 5/8" = 162 x 1/100 inches)
All flange widths are taken in 1/100 inches.

600 S 162 - 54

STYLE:
(Example: Stud or Joist Section = S)
The four alpha characters utilized by the Designator system:

Designator system:
S = Stud or Joist Sections
T = Track Sections
U = Channel Sections
F = Furring Channels Section

MATERIAL THICKNESS:
(Example: 0.054 in. = 54 mils; 1 mil = 1/1000 in.)
Material thickness is thickness in mils. Minimum base metal thickness represents 95% of the design thickness.

Note: For those sections where two different yield strengths (33 ksi and 50 ksi) are shown, the yield strength used in the design, if greater than 33 ksi, needs to be identified on the design and ordering of steel. (i.e. 600S162-54 (50 ksi))

Stud/Track
S-sections

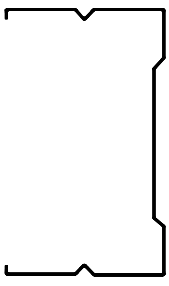

C-Stud/Joist
S-Sections

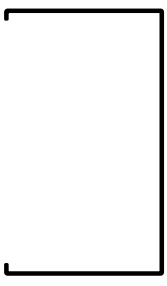

Track
T-Sections

Channel
U-Sections

Furring Channel
F-Sections

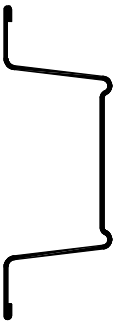

Code Approvals

Products manufactured by CEMCO are recognized by the ICC Evaluation Services' ICC ES ESR-3016 and under the tolerances of a code compliance program. Code approvals include 2009 IBC, 2012 IBC, 2010 CBC, 2009 IRC.

Material Specifications

Products manufactured by CEMCO are formed from hot-dipped galvanized steel meeting or exceeding the following ASTM, AISI standards, UL, Intertek, and additional code approval agencies.

Structural members are coated to meet the minimum code requirements, higher corrosion protection coating such as G90 are available upon request.

Product Type	Material Specifications	Min. Yield	Min. Tensile	Min. Metallic Coating Designation
Non-Strutural ASTM C645	ASTM A653, SS Grade 33	33 ksi	45 ksi	G40[1]
	ASTM A1003, Grade 33 (NS33)	33 ksi	…[6]	G40[1], A40[1], AZ50[2], GF30[3], T1-25[4], T2-100[4], 60G/60G[5]
Structural Products ASTM C955 (CP60 Coatings)	ASTM A653, SS Grade 33	33 ksi	45 ksi	G60[1], A60[1]
	ASTM A653, SS GRADE 50 Class 1	33 ksi	65 ksi	G60[1], A60[1]
	ASTM A1003, Grade 33 Type H (ST33H)	33 ksi	45 ksi	G60[1], A60[1], AZ50[2], GF30[3]
	ASTM A1003, Grade 50 Type H (ST50H)	33 ksi	65 ksi	G60[1], A60[1], AZ50[2], GF30[3]

1. A653 Standard for steel sheet, zinc coated (galvanized)or zinc-iron alloy (galvannealed) by the hot-dip process
2. A792 Standard for steel sheet, 55% aluminum-zinc alloy-coated by the hot-dip process
3. A875 Standard for steel sheet, zinc-5% aluminum coated by the hot-dip process
4. A463 Standard for steel sheet, aluminum coated by the hot-dip process
5. A879 Standard for steel sheet, zinc coated by the electrolytic process for application requiring designation of the coating mss on each surface
6. A No tensile strength for NS steels

- ASTM C955 (Structural Product)
- ASTM C1007 (Structural Installation)
- ASTM A924/A924M (Coating)
- ASTM A653/A653M (Steel)
- ASTM A1003/A1003M
- ASTM C645 (Non-Structural Product)
- ASTM C754 (Non-Structural Installation)

CEMCO Steel framing products are manufactured according to the AISI specification for the Design of Cold-Formed Steel Structural Member, AISI S100-2007. The 2010 CBC is acceptable for use in fire and sound rated assemblies listed in the Code and Gypsum Association Fire Resistance Design Manual.

UL® testing Standards and UL® Certified Products and Follow-Up Service.

Intertek Fire Endurance Test Program.

LEED® Credits for Cold-Formed Steel Framing Products:

- MR 2.1 & 2.2: Waste Management (2 points).
- EQ Credit 3.1: Construction Indoor Air Quality Management (1 point).
- MR 4.1 & 4.2: Recycled Content (2 points).
- MR 5.1 & 5.2: Regional Materials (2 points).
- SS Credit 1: Site Selection (1 point).

Earn LEED Certification with help from CEMCO

California Expanded Metal Products Co. is proud to be a member of the U.S. Green Building Council and support its LEED program, which aims to improve environmental and economic performance of commercial and residential buildings.

LEED (Leadership in Energy & Environmental Design) certifies buildings that meet the standards utilizing energy, environmental design and products, as defined in the LEED rating system. The use of CEMCO products can help projects accumulate points in specific categories, including Recycled Content and Local/Regional Materials.

Recycled Content

Recycled steel content used in the fabrication of CEMCO cold-formed-steel products are in compliance with the Requirement for Environmental and Recycled Content Materials. CEMCO steel suppliers have indicated that their steel contains 30% to 35% recycled steel. The steel products are manufactured from steel consisting of the following contents:

- 36.9% Recycled Steel
- 19.8% Post-Consumer
- 14.4% Pre-Consumer

Local/Regional Materials

CEMCO serves the Western United States through its primary locations in the City of Industry and Pittsburg, Calif., Ft. Worth, TX and Denver, Colo.

For all the information you need about becoming LEED-certified using steel-framing materials, download a copy of CEMCO's LEED Certification at www.cemcosteel.com or call (800) 775-2362.

CEMCO™
Steel Framing and Metal Lath

Thickness Table

Minimum Thickness (mils)	Design Thickness (in.)	Minimum Thickness (in.)	Inside Corner Radii	Gauge No.	Color Code
18	0.0188	0.0179	0.0843	25	None
27	0.0283	0.0269	0.0796	22	Black
30	0.0312	0.0296	0.0781	20-Non-Structural	Pink
33	0.0346	0.0329	0.0764	20-Structural	White
43	0.0451	0.0428	0.0712	18	Yellow
54	0.0566	0.0538	0.0849	16	Green
68	0.0713	0.0677	0.1069	14	Orange
97	0.1017	0.0966	0.1525	12	Red

Design Stiffening Lip Length

Section	Flange Width	Design Stiffening Lip Length (in)
S125	1-1/4"	0.188
S137	1-3/8"	0.375
S162	1-5/8"	0.500
S200	2"	0.625
S250	2-1/2"	0.625
S300	3"	0.875

1. Minimum Thickness represents 95% of the design thickness and is the minimum acceptable thickness delivered to the job site based on A2.4 of the AISI S100-2007.
2. The tables in this catalog are calculated based on the inside corner radii listed on this table.
3. The inside corner radius is the maximum of 3/32-t/2, or 1.5t

General Notes for All Tables

1. The values in this catalog are based on the 2007 edition of the North American Specification for the Design of Cold-Formed Steel Structural Members, AISI S100-07 as referenced by 2009 International Building Code (IBC) and AISI S100-07 with Supplement S2-10 as referenced by 2012 IBC.
2. Where AISI S100 is referenced, it is the “North American Specification for the Design of Cold-Formed Steel Structural Members”, S100-07 and AISI S100-07 with supplement S2-10 as applicable with US provisions.
3. The structural properties included in this catalog have been computed based on allowable strength design (ASD) method.
4. Distortional buckling calculations are based on the $K\Phi = 0$.
5. The effective moment of inertia for deflection is calculated at a stress which results in a section modulus such that the stress times the section modulus at that stress is equal to the allowable moment AISI S100 Procedure 1 for serviceability determination has been used.
6. Various sections may be manufactured with yield strength of either 33 or 50 ksi. The yield strength used for calculations is indicated in the tables.
7. Conditions with loads that exceed the 10 psf limit for nonstructural members require an approved CP60 coating.
8. When provided, factory punchouts will be located along the centerline of the webs of the members and will have a minimum center-to-center spacing of 24 inches. Punchouts for members greater than 2.5 inches deep are a maximum of 1.5 inches wide x 4.0 inches long. Members with depths of 2.5 inches and smaller are maximum of ¾” wide x 2 inches long. Any configuration or combination of holes that fit within the punchout width and length limitations mentioned above shall be permitted; other punchout configurations and locations not in compliance with limitations listed above is permitted provided it is approved by a design professional.

CEMCO™
Steel Framing and Metal Lath

DEFINITIONS OF STRUCTURAL PROPERTY SYMBOLS

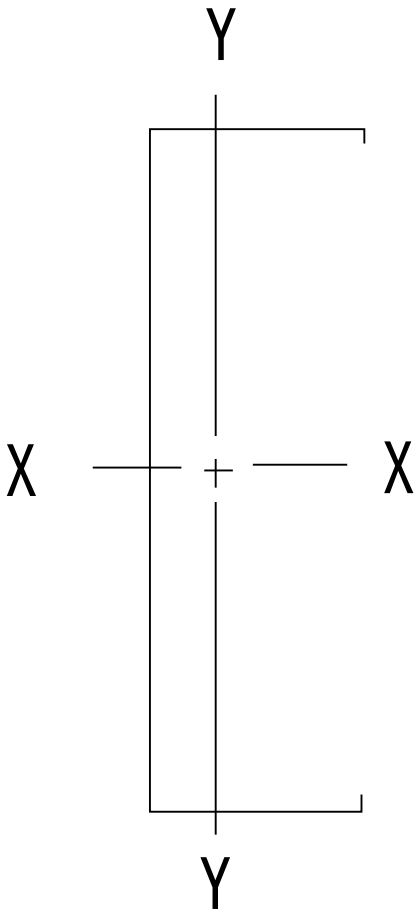

Gross Section Properties

Ix Moment of Inertia of the cross section about the X-axis.

Sx Section modulus about the X-axis.

Rx Radius of gyration of cross section about the X-axis.

Iy Moment of inertia of cross section about the Y-axis.

Ry Radius of gyration of cross section about the Y-axis.

Effective Section Properties

Ixe Effective moment of inertia about the X-axis.

Sxe Effective section modulus about the X-axis.

Mal Allowable moment based on local buckling.

Mnd Nominal moment based on distortional buckling, assuming $K\Phi = 0$.

Mad Allowable moment based on distortional buckling, assuming $K\Phi = 0$. Mad = Mnd/Ω ($\Omega = 1.67$ for members).

Ma Allowable moment for track and channel members, based on local buckling only.

Vag Allowable strong axis shear away from punchout, calculated in accordance with AISI S100 section C3.2.1.

Vanet Allowable strong axis shear at the punchout, calculated in accordance with AISI S100 C3.2.1.

Torsional and Other Properties

J St. Venant torsional constant. The numbers shown in tables for J, have been multiplied by 1000. The actual values can be obtained by dividing the listed numbers by 1000.

Cw Torsional warping constant.

Xo Distance from the shear center to the centroid along the principal X-axis.

m Distance from shear center to mid-plane of web.

Ro Polar radius of gyration of cross section about the shear center.

ß $1 - (Xo/Ro)^2$

Lu Critical unbraced length for lateral-torsional buckling. Members are considered fully braced when unbraced length is less than Lu.

KΦ Distortional buckling moment (Mad) is calculated without the beneficial effect of Sheathing to rotational stiffness, $K\Phi = 0$.

Web Depth-to-Thickness (h/t) Ratios [2,3,4]

Mil Thickness	18 mil		27 m il		30 mil		33 mil		43 mil		54 mil		68 mil		97 mil	
Design Thickness (in)	0.0188		0.0283		0.0312		0.0346		0.0451		0.0566		0.0713		0.1017	
Inside Bend Radius	0.0843		0.0796		0.0781		0.0764		0.0712		0.0849		0.1069		0.1525	
Design Thickness (in)	h (in)	h/t	h (in)	h/t	h (in)	h/t	h (in)	h/t	h (in)	h/t	h (in)	h/t	h (in)	h/t	h (in)	h/t
1.625	1.419	75	1.409	50	1.406	45	1.403	41	1.392	31	1.342	24	1.269	18	1.117	11
2.5	2.294	122	2.284	81	2.281	73	2.278	66	2.267	50	2.217	39	2.144	30	1.992	20
3.5	3.294	175	3.284	116	3.281	105	3.278	95	3.267	72	3.217	57	3.144	44	2.992	29
3.625	3.419	182	3.409	120	3.406	109	3.403	98	3.392	75	3.342	59	3.269	46	3.117	31
4	3.794	202[1]	3.784	134	3.781	121	3.778	109	3.767	84	3.717	66	3.664	51	3.492	34
5.5	5.294	-	5.284	187	5.281	169	5.278	153	5.267	117	5.217	92	5.144	72	4.992	49
6	5.794	-	5.784	204[1]	5.781	185	5.778	167	5.767	128	5.717	101	5.644	79	5.492	54
8	7.794	-	7.784	-	7.781	249[1]	7.778	225[1]	7.767	172	7.717	136	7.644	107	7.492	74
10	9.794	-	9.784	-	9.781	-	9.778	-	9.767	217[1]	9.717	172	9.644	135	9.492	93
12	11.794	-	11.784	-	11.781	-	11.778	-	11.767	-	11.717	207[1]	11.644	164	11.492	113
14	13.794	-	13.784	-	13.781	-	13.778	-	13.767	-	13.717	242[1]	13.644	192	13.492	133

Notes:
1. h/t exceeds 200
2. h value used for h/t calculation is the flat width of the web. For (S) members, this is the out-to-out member size, minus twice the thickness, minus twice the inside bend radius
3. h/t values exceeding 260 are marked with a dash (-)
4. h/t values in this table apply to S (studs and joists) members only, and do not apply to tracks and channels

Section Property Table Notes

1. Web depth for track sections equals nominal depth plus 2 times the design thickness plus bend radius.
2. The centerline bend radius is based on inside corner radii shown in the Steel Thickness table found in this catalog.
3. Effective properties include the strength increase from cold-work of forming per AISI S100 section A7.2 where applicable.
4. Tabulated gross properties are based on full, unreduced section away from punchouts.
5. Effective properties for all “S” sections based on punched sections. Track sections are considered unpunched.
6. Allowable moment is the lesser of Mal and Mad. Stud distortional buckling is based on an assumed $K\Phi = 0$.
7. For deflection determination, use the effective moment of inertia.
8. For sections with properties listed for both 33ksi and 50 ksi yield point, the required yield point should be specified in the design documents.
9. Where effective properties are not listed for a section at 33 ksi or 50 ksi, web-to-thickness limits from the AISI S100 are exceeded, only gross properties are available.

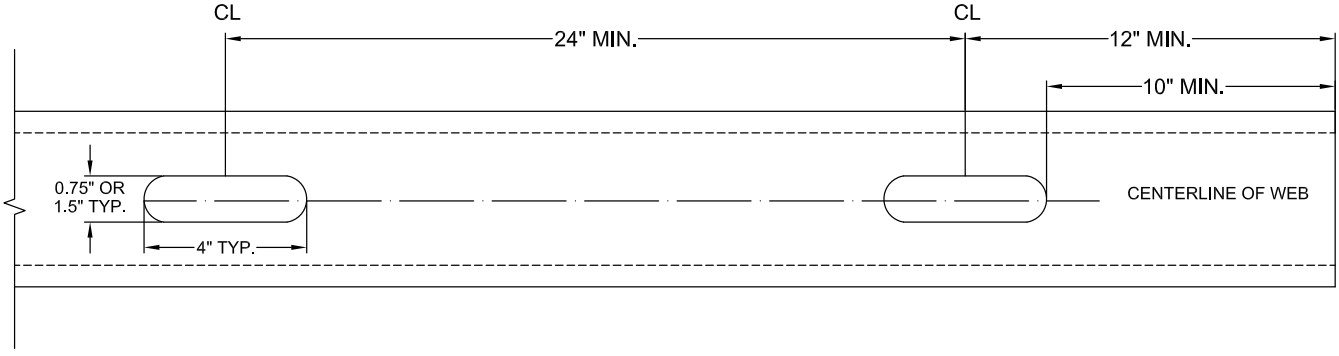

Structural Section Properties for Studs

Member	Design Thickness (in)	Gross							Effective Properties (Fy=33 ksi)								Effective Properties (Fy=50 ksi)								Torsional Properties					
		Area (in2)	Weight (lb/ft)	Ix (in4)	Sx (in3)	Rx (in)	Iy (in4)	Ry (in)	Ixe (in4)	Sxe (in3)	Mal (in-k)	Vag (lb)	Vanet (lb)	Fya (ksi)	Lu (in)	Mnd (in-k)	Ixe (in4)	Sxe (in3)	Mal (in-k)	Vag (lb)	Vanet (lb)	Fya (ksi)	Lu (in)	Mnd (in-k)	Jx1000 (in4)	Cw (in6)	Xo (in)	m (in)	Ro (in)	β
250S137-33	0.0346	0.197	0.67	0.203	0.163	1.015	0.052	0.515	0.203	0.158	3.11	975	399	33.0	35.5	5.18									0.079	0.076	-1.141	0.677	1.612	0.499
250S137-43	0.0451	0.255	0.87	0.261	0.208	1.010	0.067	0.511	0.261	0.205	4.53	1265	394	36.9	33.7	7.68									0.173	0.096	-1.129	0.670	1.599	0.501
250S137-54	0.0566	0.316	1.07	0.318	0.255	1.004	0.080	0.504									0.318	0.244	8.22	2353	565	56.3	27.1	13.96	0.337	0.115	-1.115	0.663	1.583	0.504
250S137-68	0.0713	0.390	1.33	0.386	0.309	0.994	0.095	0.495									0.386	0.308	10.65	2866	519	57.7	26.8	17.83	0.661	0.138	-1.096	0.653	1.561	0.507
250S137-97	0.1017	0.533	1.81	0.506	0.405	0.975	0.120	0.475									0.506	0.405	14.75	3798	429	60.8	26.5	24.62	1.839	0.176	-1.057	0.633	1.514	0.513
250S162-33	0.0346	0.223	0.76	0.235	0.188	1.027	0.087	0.624	0.235	0.180	3.55	975	399	33.0	44.1	5.95									0.089	0.146	-1.470	0.859	1.898	0.401
250S162-43	0.0451	0.289	0.98	0.302	0.242	1.022	0.111	0.620	0.302	0.240	5.22	1265	394	36.3	42	8.78									0.196	0.184	-1.457	0.852	1.885	0.402
250S162-54	0.0566	0.358	1.22	0.370	0.296	1.016	0.135	0.613									0.370	0.284	9.42	2353	565	55.4	33.9	15.84	0.383	0.223	-1.443	0.845	1.868	0.403
250S162-68	0.0713	0.443	1.51	0.450	0.360	1.007	0.162	0.605									0.450	0.357	12.11	2866	519	56.6	33.7	20.39	0.752	0.268	-1.424	0.835	1.846	0.405
250S162-97	0.1017	0.610	2.07	0.596	0.477	0.989	0.209	0.586									0.596	0.477	16.93	3798	429	59.2	33.5	28.24	2.102	0.346	-1.386	0.815	1.801	0.408
350S137-33	0.0346	0.232	0.79	0.441	0.252	1.380	0.059	0.503	0.441	0.223	4.41	1024	487	33.0	34.8	7.58									0.093	0.153	-1.016	0.621	1.786	0.676
350S137-43	0.0451	0.300	1.02	0.568	0.324	1.375	0.075	0.498	0.568	0.307	6.07	1739	631	33.0	34.7	10.65									0.204	0.193	-1.005	0.615	1.774	0.679
350S137-54	0.0566	0.372	1.27	0.696	0.398	1.367	0.090	0.492									0.696	0.366	10.95	3372	947	50	28	19.09	0.398	0.233	-0.991	0.607	1.759	0.683
350S137-68	0.0713	0.461	1.57	0.849	0.485	1.357	0.107	0.482									0.849	0.472	14.12	4202	897	50	27.9	24.25	0.782	0.280	-0.973	0.598	1.738	0.687
350S137-97	0.1017	0.635	2.16	1.130	0.646	1.334	0.136	0.462									1.130	0.629	22.9	5704	775	50	27.9	39.23	2.189	0.361	-0.935	0.579	1.693	0.695
350S162-33	0.0346	0.258	0.88	0.508	0.290	1.404	0.098	0.617	0.508	0.257	5.08	1024	487	33.0	42.8	8.70									0.103	0.277	-1.324	0.796	2.026	0.573
350S162-43	0.0451	0.334	1.14	0.654	0.374	1.400	0.125	0.612	0.654	0.357	7.05	1739	631	33.0	42.6	12.21									0.227	0.350	-1.312	0.789	2.014	0.575
350S162-54	0.0566	0.415	1.41	0.804	0.460	1.392	0.152	0.606									0.804	0.426	12.74	3372	947	50	34.5	21.83	0.443	0.426	-1.298	0.782	1.998	0.578
350S162-68	0.0713	0.515	1.75	0.985	0.563	1.383	0.184	0.597									0.985	0.549	16.44	4202	897	50	34.5	28.15	0.872	0.514	-1.280	0.772	1.977	0.581
350S162-97	0.1017	0.711	2.42	1.320	0.754	1.362	0.238	0.578									1.320	0.738	26.18	5704	775	50	34.7	44.70	2.452	0.672	-1.242	0.752	1.932	0.587
362S137-33	0.0346	0.236	0.80	0.479	0.264	1.424	0.059	0.501	0.479	0.232	4.59	1024	521	33.0	34.7	7.89									0.094	0.165	-1.003	0.615	1.813	0.694
362S137-43	0.0451	0.306	1.04	0.616	0.340	1.419	0.075	0.497	0.616	0.320	6.32	1739	676	33.0	34.6	11.11									0.207	0.208	-0.991	0.608	1.801	0.697
362S137-54	0.0566	0.379	1.29	0.756	0.417	1.411	0.091	0.490									0.756	0.381	11.42	3372	1016	50	27.9	19.88	0.405	0.251	-0.978	0.601	1.785	0.700
362S137-68	0.0713	0.470	1.60	0.922	0.509	1.401	0.109	0.480									0.922	0.493	14.77	4370	1004	50	27.8	25.45	0.797	0.302	-0.959	0.592	1.764	0.704
362S137-97	0.1017	0.648	2.20	1.229	0.678	1.377	0.137	0.460									1.229	0.662	24.1	5943	875	50	27.8	41.21	2.233	0.390	-0.922	0.573	1.720	0.713
362S162-33	0.0346	0.262	0.89	0.551	0.304	1.450	0.099	0.616	0.551	0.268	5.29	1024	521	33.0	42.6	9.07									0.105	0.297	-1.308	0.789	2.048	0.592
362S162-43	0.0451	0.340	1.16	0.710	0.392	1.445	0.127	0.611	0.710	0.372	7.34	1739	676	33.0	42.5	12.73									0.230	0.376	-1.297	0.782	2.036	0.594
362S162-54	0.0566	0.422	1.44	0.873	0.481	1.438	0.154	0.604									0.873	0.444	13.28	3372	1016	50	34.4	22.65	0.451	0.457	-1.283	0.774	2.020	0.597
362S162-68	0.0713	0.524	1.78	1.069	0.590	1.429	0.186	0.596									1.069	0.574	17.18	4370	1004	50	34.3	29.50	0.887	0.552	-1.264	0.765	1.998	0.600
362S162-97	0.1017	0.724	2.46	1.435	0.792	1.408	0.241	0.577									1.435	0.776	27.52	5943	875	50	34.5	46.90	2.496	0.723	-1.226	0.745	1.954	0.606
362S200-33	0.0346	0.297	1.01	0.648	0.358	1.478	0.177	0.772	0.647	0.294	5.81	1024	521	33.0	53.5	10.34									0.118	0.577	-1.741	1.030	2.411	0.478
362S200-43	0.0451	0.385	1.31	0.836	0.461	1.474	0.227	0.767	0.836	0.427	8.43	1739	676	33.0	53.5	14.53									0.261	0.734	-1.729	1.024	2.398	0.480
362S200-54	0.0566	0.479	1.63	1.030	0.568	1.467	0.277	0.761									1.030	0.49	14.66	3372	1016	50	43.3	25.83	0.511	0.896	-1.715	1.016	2.382	0.482
362S200-68	0.0713	0.595	2.02	1.265	0.698	1.458	0.337	0.753									1.265	0.666	19.95	4370	1004	50	43.4	34.26	1.008	1.089	-1.696	1.006	2.360	0.484
362S200-97	0.1017	0.826	2.81	1.711	0.944	1.440	0.446	0.735									1.711	0.928	32.03	5943	875	50	43.7	54.40	2.847	1.441	-1.658	0.986	2.315	0.487
362S250-43	0.0451	0.430	1.46	0.980	0.541	1.510	0.385	0.946	0.980	0.449	8.88	1739	676	33.0	64.1	15.63									0.292	1.230	-2.199	1.277	2.830	0.396
362S250-54	0.0566	0.535	1.82	1.210	0.668	1.504	0.473	0.940									1.205	0.514	15.4	3372	1016	50	52	27.64	0.571	1.506	-2.184	1.269	2.813	0.397
362S250-68	0.0713	0.666	2.27	1.490	0.822	1.496	0.578	0.931									1.490	0.689	20.63	4370	1004	50	52	37.01	1.129	1.837	-2.165	1.259	2.791	0.398
362S250-97	0.1017	0.927	3.16	2.027	1.118	1.478	0.772	0.912									2.027	1.046	35.17	5943	875	50	52.5	61.67	3.197	2.452	-2.126	1.239	2.746	0.400
362S300-54	0.0566	0.592	2.01	1.390	0.767	1.533	0.734	1.114									1.312	0.5288	15.83	3372	1016	50	60.2	28.96	0.632	2.316	-2.659	1.522	3.265	0.337
362S300-68	0.0713	0.738	2.51	1.716	0.947	1.525	0.900	1.105									1.684	0.716	21.44	4370	1004	50	60.4	39.11	1.250	2.833	-2.640	1.512	3.243	0.337
362S300-97	0.1017	1.029	3.50	2.343	1.292	1.509	1.213	1.086									2.320	1.1496	57.48	5943	875	50	67.3	60.80	3.548	3.803	-2.600	1.491	3.196	0.338
400S137-33	0.0346	0.249	0.85	0.603	0.301	1.556	0.061	0.496	0.603	0.259	5.12	976	595	33.0	34.5	8.81									0.099	0.204	-0.965	0.597	1.897	0.741
400S137-43	0.0451	0.323	1.10	0.776	0.388	1.551	0.078	0.491	0.776	0.359	7.09	1739	810	33.0	34.4	12.47									0.219	0.257	-0.954	0.591	1.885	0.744
400S137-54	0.0566	0.401	1.36	0.953	0.477	1.542	0.094	0.484									0.953	0.428	12.82	3372	1223	50	27.7	22.36	0.428	0.311	-0.940	0.583	1.870	0.747
400S137-68	0.0713	0.497	1.69	1.165	0.582	1.531	0.112	0.475									1.165	0.558	16.7	4871	1356	50	27.6	29.10	0.842	0.375	-0.922	0.574	1.849	0.751
400S137-97	0.1017	0.686	2.33	1.557	0.779	1.507	0.142	0.454									1.557	0.764	27.81	6658	1207	50	27.5	47.32	2.365	0.486	-0.885	0.555	1.806	0.760
400S162-33	0.0346	0.275	0.94	0.692	0.346	1.586	0.103	0.611	0.692	0.299	5.91	976	595	33.0	42.3	10.13									0.110	0.363	-1.263	0.768	2.118	0.644
400S162-43	0.0451	0.357	1.21	0.892	0.446	1.581	0.131	0.606	0.892	0.417	8.23	1739	810	33.0	42.2	14.27									0.242	0.460	-1.252	0.761	2.106	0.647
400S162-54	0.0566	0.443	1.51	1.098	0.549	1.574	0.159	0.600									1.098	0.498	14.9	3372	1223	50	34.1	25.47	0.473	0.560	-1.238	0.754	2.090	0.649
400S162-68	0.0713	0.550	1.87	1.346	0.673	1.564	0.192	0.591									1.346	0.648	19.41	4871	1356	50	34	33.65	0.933	0.677	-1.220	0.745	2.069	0.653
400S162-97	0.1017	0.762	2.59	1.812	0.906	1.542	0.249	0.572									1.812	0.892	31.64	6658	1207	50	34	53.69	2.628	0.889	-1.182	0.725	2.025	0.659
400S200-33	0.0346	0.310	1.05	0.812	0.406	1.619	0.183	0.769	0.812	0.328	6.49	976	595	33.0	53.1	11.52									0.124	0.697	-1.688	1.007	2.462	0.530
400S200-43	0.0451	0.402	1.37	1.047	0.524	1.615	0.235	0.764	1.047	0.478	9.45	1739	810	33.0	53	16.27									0.272	0.886	-1.676	1.000	2.449	0.532
400S200-54	0.0566	0.500	1.70	1.292	0.646	1.608	0.287	0.758									1.292	0.549	16.43	3372	1223	50	42.9	28.88	0.534	1.083	-1.662	0.993	2.433	0.534
400S200-68	0.0713	0.622	2.12	1.589	0.795	1.599	0.349	0.750									1.589	0.751	22.48	4871	1356	50	42.9	38.47	1.054	1.318	-1.643	0.983	2.412	0.536
400S200-97	0.1017	0.864	2.94	2.155	1.077	1.579	0.462	0.731									2.155	1.063	36.68	6658	1207	50	43	62.07	2.978	1.749	-1.605	0.963	2.368	0.540
400S250-43	0.0451	0.447	1.52	1.224	0.612	1.655	0.399	0.945	1.224	0.503	9.93	1739	810	33.0	63.7	17.40									0.303	1.486	-2.139	1.252	2.864	0.443
400S250-54	0.0566	0.556	1.89	1.512	0.756	1.649	0.490	0.938									1.506	0.576	17.24	3372	1223	50	51.6	30.77	0.594	1.821	-2.124	1.244	2.848	0.444
400S250-68	0.0713	0.693	2.36	1.864	0.932	1.640	0.599	0.929									1.864	0.775	23.19	4871	1356	50	51.6	41.35	1.174	2.225	-2.105	1.235	2.826	0.445
400S250-97	0.1017	0.966	3.29	2.541	1.271	1.622	0.801	0.911									2.541	1.191	40.06	6658	1207	50	51.9	69.25	3.329	2.978	-2.066	1.214	2.780	0.448
400S300-54	0.0566	0.613	2.09	1.732	0.866	1.681	0.760	1.114									1.637	0.529	17.72	3372	1223	50	59.9	32.15	0.655	2.802	-2.594	1.496	3.285	0.377
400S300-68	0.0713	0.764	2.60	2.139	1.070	1.673	0.933	1.105									2.099	0.805	24.09	4871	1356	50	60	43.51	1.295	3.432	-2.574	1.486	3.263	0.378
400S300-97	0.1017	1.118	3.80	3.007	1.504	1.640	1.420	1.127									3.007	1.43	42.81	6658	1207	50	66.2	68.00	3.855	6.317	-2.735	1.583	3.383	0.346
550S137-33	0.0346	0.301	1.02	1.283	0.467	2.064	0.067	0.472	1.283	0.453	8.95	699	699	33.0	33.7	12.51									0.120	0.411	-0.841	0.536	2.278	0.864
550S137-43	0.0451	0.391	1.33	1.655	0.602	2.059	0.085	0.467	1.655	0.592	13.08	1550	1199	36.9	31.7	19.38									0.265	0.520	-0.830	0.530	2.268	0.866
550S137-54	0.0566	0.486	1.65	2.039	0.741	2.049	0.103	0.460									2.039	0.714	24.03	3093	1881	56.2	25.5	34.83	0.519	0.632	-0.817	0.523	2.254	0.868
550S137-68	0.0713	0.604	2.05	2.503	0.910	2.036	0.123	0.451									2.503	0.909	31.42	5350	2532	57.7	24.9	48.21	1.023	0.764	-0.801	0.514	2.234	0.871
550S137-97	0.1017	0.838	2.85	3.380	1.229	2.008	0.155	0.430									3.380	1.229	44.72	9518	3026	60.8	23.8	74.69	2.891	0.997	-0.766	0.497	2.192	0.878
550S162-33	0.0346	0.327	1.11	1.458	0.530	2.112	0.113	0.589	1.458	0.512	10.11	699	699	33.0	41.4	14.39									0.130	0.713	-1.114	0.697	2.459	0.795
550S162-43	0.0451	0.424	1.44	1.883	0.685	2.107	0.145	0.584	1.883	0.681	14.79	1550	1199	36.3	39.2	21.95									0.288	0.905	-1.103	0.691	2.448	0.797
550S162-54	0.0566	0.528	1.80	2.324	0.845	2.098	0.176	0.577									2.324	0.811	26.86	3093	1881	55.3	31.6	39.27	0.564	1.105	-1.090	0.684	2.434	0.800
550S162-68	0.0713	0.657	2.24	2.861	1.040	2.086	0.212	0.568									2.861	1.031	34.94	5350	2532	56.6	31.1	58.86	1.114	1.342	-1.072	0.675	2.414	0.803
550S162-97	0.1017	0.915	3.11	3.886	1.413	2.061	0.276	0.549									3.886	1.413	50.13	9518	3026	59.2	30	83.71	3.154	1.775	-1.037	0.656	2.372	0.809

Notes:

1. h/t exceeds 200
2. h value used for h/t calculation is the flat width of the web. For (S) members, this is the out-to-out member size, minus twice the thickness, minus twice the inside bend radius
3. h/t values exceeding 260 are marked with a dash (-)
4. h/t values in this table apply to S (studs and joists) members only, and do not apply to tracks and channels

Structural Section Properties for Studs

Member	Design Thickness (in)	Gross							Effective Properties (Fy=33 ksi)								Effective Properties (Fy=50 ksi)								Torsional Properties					
		Area (in2)	Weight (lb/ft)	Ix (in4)	Sx (in3)	Rx (in)	Iy (in4)	Ry (in)	Ixe (in4)	Sxe (in3)	Mal (in-k)	Vag (lb)	Vanet (lb)	Fya (ksi)	Lu (in)	Mnd (in-k)	Ixe (in4)	Sxe (in3)	Mal (in-k)	Vag (lb)	Vanet (lb)	Fya (ksi)	Lu (in)	Mnd (in-k)	Jx1000 (in4)	Cw (in6)	Xo (in)	m (in)	Ro (in)	β
600S137-33	0.0346	0.318	1.08	1.582	0.527	2.229	0.069	0.464	1.548	0.455	8.98	638	638	33.0	33.5	13.66									0.127	0.500	-0.807	0.519	2.416	0.889
600S137-43	0.0451	0.413	1.41	2.042	0.681	2.223	0.087	0.459	2.041	0.645	12.74	1416	1240	33.0	33.2	19.76									0.280	0.633	-0.796	0.513	2.406	0.890
600S137-54	0.0566	0.514	1.75	2.518	0.839	2.213	0.105	0.452									2.518	0.777	23.26	2823	1947	50	26.8	35.47	0.549	0.769	-0.784	0.506	2.391	0.893
600S137-68	0.0713	0.640	2.18	3.094	1.031	2.200	0.125	0.443									3.094	1.03	30.84	5350	2879	50	26.5	48.20	1.084	0.930	-0.768	0.497	2.371	0.895
600S137-97	0.1017	0.889	3.03	4.188	1.396	2.170	0.159	0.422									4.188	1.396	50.8	10472	3805	60.8	23.6	84.88	3.066	1.216	-0.734	0.480	2.330	0.901
600S162-33	0.0346	0.344	1.17	1.793	0.598	2.282	0.116	0.581	1.793	0.577	11.41	638	638	33.0	41.1	15.82									0.137	0.861	-1.072	0.677	2.587	0.828
600S162-43	0.0451	0.447	1.52	2.316	0.772	2.276	0.148	0.576	2.316	0.767	16.68	1416	1240	36.3	39	24.16									0.303	1.095	-1.062	0.670	2.577	0.830
600S162-54	0.0566	0.556	1.89	2.860	0.953	2.267	0.180	0.570									2.860	0.916	30.33	2823	1947	55.3	31.4	43.25	0.594	1.337	-1.049	0.663	2.562	0.832
600S162-68	0.0713	0.693	2.36	3.525	1.175	2.255	0.218	0.560									3.525	1.164	39.47	5350	2879	56.6	30.8	59.60	1.174	1.626	-1.032	0.655	2.543	0.835
600S162-97	0.1017	0.966	3.29	4.797	1.599	2.229	0.283	0.541									4.797	1.599	56.73	10472	3805	59.2	29.8	94.66	3.329	2.153	-0.997	0.636	2.501	0.841
600S200-33	0.0346	0.379	1.29	2.075	0.692	2.340	0.209	0.743	2.058	0.621	12.28	638	638	33.0	51.6	17.98									0.151	1.593	-1.457	0.901	2.855	0.740
600S200-43	0.0451	0.492	1.67	2.683	0.894	2.335	0.268	0.739	2.683	0.873	17.24	1416	1240	33.0	51.5	25.69									0.334	2.033	-1.446	0.894	2.844	0.742
600S200-54	0.0566	0.613	2.09	3.319	1.106	2.327	0.328	0.732									3.319	1.015	30.4	2823	1947	50	41.6	45.71	0.655	2.493	-1.432	0.887	2.829	0.744
600S200-68	0.0713	0.764	2.60	4.101	1.367	2.316	0.400	0.723									4.101	1.317	43.71	5350	2879	55.4	39.3	66.29	1.295	3.047	-1.415	0.878	2.809	0.746
600S200-97	0.1017	1.067	3.63	5.612	1.871	2.293	0.530	0.705									5.612	1.871	64.53	10472	3805	57.6	38.3	106.31	3.679	4.080	-1.378	0.859	2.767	0.752
600S250-43	0.0451	0.537	1.83	3.082	1.027	2.396	0.458	0.923	3.082	0.918	18.14	1416	1240	33.0	62.4	27.07									0.364	3.411	-1.874	1.136	3.179	0.652
600S250-54	0.0566	0.670	2.28	3.819	1.273	2.388	0.562	0.917									3.766	1.069	32	2823	1947	50	50.5	47.96	0.715	4.194	-1.860	1.129	3.163	0.654
600S250-68	0.0713	0.836	2.84	4.727	1.576	2.378	0.688	0.908									4.723	1.386	41.49	5350	2879	50	50.4	65.26	1.416	5.145	-1.842	1.119	3.142	0.656
600S250-97	0.1017	1.169	3.98	6.496	2.165	2.357	0.923	0.889									6.496	2.063	69.38	10472	3805	56.2	47.3	111.60	4.030	6.947	-1.803	1.100	3.098	0.661
600S300-54	0.0566	0.726	2.47	4.319	1.440	2.439	0.875	1.098									4.014	1.106	33.13	2823	1947	50	59.1	49.47	0.775	6.452	-2.299	1.372	3.527	0.575
600S300-68	0.0713	0.907	3.09	5.354	1.785	2.430	1.075	1.089									5.221	1.446	43.3	5350	2879	50	59	67.69	1.537	7.937	-2.280	1.363	3.505	0.577
600S300-97	0.1017	1.271	4.32	7.381	2.460	2.410	1.454	1.070									7.280	2.247	67.28	10472	3805	50	58.8	108.00	4.381	10.776	-2.241	1.343	3.461	0.581
800S137-33[1]	0.0346	0.388	1.32	3.198	0.799	2.873	0.073	0.435	2.998	0.622	12.30	474	474	33.0	32.5	17.89									0.155	0.957	-0.696	0.460	2.987	0.946
800S137-43	0.0451	0.503	1.71	4.134	1.033	2.866	0.093	0.430	4.001	0.896	17.70	1051	1051	33.0	32.2	26.32									0.341	1.214	-0.687	0.454	2.978	0.947
800S137-54	0.0566	0.627	2.13	5.110	1.277	2.855	0.112	0.423									4.974	1.083	32.42	2091	2091	50	25.9	47.53	0.670	1.478	-0.676	0.448	2.964	0.948
800S137-68	0.0713	0.782	2.66	6.303	1.576	2.839	0.134	0.414									6.285	1.468	43.96	4221	3367	50	25.6	66.14	1.325	1.789	-0.661	0.440	2.944	0.950
800S137-97	0.1017	1.093	3.72	8.597	2.149	2.805	0.169	0.394									8.597	2.149	64.35	10885	5938	50	25	106.71	3.767	2.349	-0.630	0.423	2.902	0.953
800S162-33[1]	0.0346	0.413	1.41	3.582	0.896	2.943	0.125	0.550	3.384	0.710	14.03	474	474	33.0	40.1	21.05									0.165	1.630	-0.936	0.607	3.137	0.911
800S162-43	0.0451	0.537	1.83	4.633	1.158	2.937	0.160	0.546	4.500	1.019	20.14	1051	1051	33.0	39.9	30.61									0.364	2.076	-0.926	0.601	3.128	0.912
800S162-54	0.0566	0.670	2.28	5.736	1.434	2.927	0.194	0.539									5.600	1.229	36.79	2091	2091	50	32.1	54.79	0.715	2.539	-0.914	0.594	3.113	0.914
800S162-68	0.0713	0.836	2.84	7.089	1.772	2.913	0.235	0.530									7.070	1.663	49.8	4221	3367	50	31.9	75.30	1.416	3.093	-0.899	0.586	3.094	0.916
800S162-97	0.1017	1.169	3.98	9.713	2.428	2.883	0.305	0.510									9.713	2.428	72.7	10885	5938	50	31.4	120.09	4.030	4.114	-0.866	0.568	3.053	0.919
800S200-33[1]	0.0346	0.448	1.52	4.096	1.024	3.023	0.227	0.712	4.096	0.816	16.12	474	474	33.0	50.5	24.25									0.179	2.971	-1.288	0.817	3.363	0.853
800S200-43	0.0451	0.582	1.98	5.302	1.325	3.018	0.292	0.708	5.302	1.293	25.54	1051	1051	33.0	50.4	35.03									0.395	3.797	-1.277	0.811	3.353	0.855
800S200-54	0.0566	0.726	2.47	6.573	1.643	3.009	0.357	0.701									6.573	1.499	44.87	2091	2091	50	40.7	62.44	0.775	4.663	-1.265	0.804	3.338	0.856
800S200-68	0.0713	0.907	3.09	8.140	2.035	2.996	0.435	0.692									8.140	1.964	65.21	4221	3367	55.4	38.4	91.22	1.537	5.712	-1.248	0.796	3.319	0.859
800S200-97	0.1017	1.271	4.32	11.203	2.801	2.969	0.576	0.673									11.203	2.801	96.63	10885	5938	57.6	37.2	149.79	4.381	7.684	-1.214	0.777	3.278	0.863
800S250-43	0.0451	0.627	2.13	6.015	1.504	3.097	0.500	0.893	6.015	1.313	25.95	1051	1051	33.0	61.5	36.87									0.425	6.374	-1.675	1.043	3.632	0.787
800S250-54	0.0566	0.783	2.66	7.465	1.866	3.088	0.614	0.886									7.378	1.525	45.66	2091	2091	50	49.8	65.31	0.836	7.850	-1.661	1.036	3.617	0.789
800S250-68	0.0713	0.978	3.33	9.261	2.315	3.077	0.752	0.877									9.240	2.059	61.65	4221	3367	50	49.6	89.66	1.658	9.652	-1.644	1.027	3.597	0.791
800S250-97	0.1017	1.372	4.67	12.789	3.197	3.053	1.009	0.857									12.789	3.054	102.7	10885	5938	56.2	46.4	156.15	4.731	13.091	-1.607	1.008	3.555	0.796
800S300-54	0.0566	0.839	2.86	8.358	2.090	3.156	0.960	1.069									8.017	1.535	45.96	2091	2091	50	58.6	67.17	0.896	12.076	-2.073	1.271	3.924	0.721
800S300-68	0.0713	1.050	3.57	10.382	2.595	3.145	1.179	1.060									10.191	2.145	64.21	4221	3367	50	58.4	92.63	1.779	14.888	-2.055	1.262	3.903	0.723
800S300-97	0.1017	1.474	5.02	14.375	3.594	3.123	1.595	1.040									14.291	3.304	98.92	10885	5938	50	58.1	150.12	5.082	20.304	-2.017	1.243	3.860	0.727
1000S162-43[1]	0.0451	0.627	2.13	8.025	1.605	3.577	0.168	0.518	7.523	1.302	25.74	836	836	33.0	38.8	37.53									0.425	3.430	-0.823	0.545	3.707	0.951
1000S162-54	0.0566	0.783	2.66	9.950	1.990	3.565	0.204	0.511									9.391	1.572	47.07	1661	1661	50	31.3	67.42	0.836	4.198	-0.812	0.538	3.692	0.952
1000S162-68	0.0713	0.978	3.33	12.325	2.465	3.550	0.246	0.502									11.978	2.154	64.51	3345	3345	50	31	94.14	1.658	5.121	-0.798	0.531	3.673	0.953
1000S162-97	0.1017	1.372	4.67	16.967	3.393	3.516	0.320	0.483									16.967	3.269	97.89	9864	7177	50	30.4	154.59	4.731	6.827	-0.768	0.514	3.631	0.955
1000S200-43[1]	0.0451	0.672	2.29	9.085	1.817	3.676	0.309	0.677	8.602	1.470	29.05	836	836	33.0	49.3	43.67									0.456	6.236	-1.147	0.743	3.910	0.914
1000S200-54	0.0566	0.839	2.86	11.278	2.256	3.666	0.378	0.671									10.769	1.705	51.05	1661	1661	50	39.8	77.89	0.896	7.665	-1.135	0.737	3.896	0.915
1000S200-68	0.0713	1.050	3.57	13.994	2.799	3.652	0.460	0.662									13.665	2.42	72.46	3345	3345	50	39.6	107.72	1.779	9.401	-1.120	0.729	3.876	0.917
1000S200-97	0.1017	1.474	5.02	19.336	3.867	3.622	0.609	0.643									19.336	3.741	112	9864	7177	50	39	174.91	5.082	12.679	-1.088	0.711	3.836	0.920
1000S250-43[1]	0.0451	0.717	2.44	10.203	2.041	3.771	0.531	0.860	10.203	1.617	31.95	836	836	33.0	60.7	46.23									0.486	10.481	-1.518	0.965	4.155	0.867
1000S250-54	0.0566	0.896	3.05	12.677	2.535	3.762	0.653	0.854									12.660	1.879	56.26	1661	1661	50	49.1	82.16	0.957	12.922	-1.505	0.958	4.140	0.868
1000S250-68	0.0713	1.121	3.81	15.751	3.150	3.749	0.799	0.844									15.741	2.768	82.89	3345	3345	50	48.8	113.71	1.899	15.909	-1.488	0.950	4.121	0.870
1000S250-97	0.1017	1.576	5.36	21.827	4.365	3.722	1.072	0.825									21.827	4.181	140.63	9864	7177	56.2	45.6	200.54	5.433	21.632	-1.454	0.932	4.080	0.873
1000S300-54	0.0566	0.953	3.24	14.076	2.815	3.844	1.024	1.037									13.766	1.902	56.96	1661	1661	50	58.1	84.65	1.017	19.888	-1.892	1.185	4.408	0.816
1000S300-68	0.0713	1.192	4.06	17.509	3.502	3.832	1.258	1.027									17.262	2.802	83.89	3345	3345	50	57.8	117.57	2.020	24.551	-1.874	1.176	4.388	0.818
1000S300-97	0.1017	1.677	5.71	24.318	4.864	3.808	1.702	1.007									24.318	4.499	134.69	9864	7177	50	57.4	193.09	5.783	33.570	-1.838	1.158	4.346	0.821
1200S162-54[1]	0.0566	0.896	3.05	15.730	2.622	4.190	0.212	0.486									14.298	1.914	57.31	1377	1377	50	30.5	78.11	0.957	6.340	-0.732	0.493	4.281	0.971
1200S162-68	0.0713	1.121	3.81	19.518	3.253	4.173	0.255	0.477									18.390	2.645	79.19	2771	2771	50	30.2	110.35	1.899	7.739	-0.719	0.485	4.261	0.972
1200S162-97	0.1017	1.576	5.36	26.966	4.494	4.137	0.331	0.459									26.735	4.091	122.49	8147	7411	50	29.5	186.03	5.433	10.331	-0.691	0.470	4.219	0.973
1200S200-54[1]	0.0566	0.953	3.24	17.662	2.944	4.306	0.393	0.643									16.334	2.073	62.07	1377	1377	50	39	91.45	1.017	11.550	-1.032	0.681	4.474	0.947
1200S200-68	0.0713	1.192	4.06	21.947	3.658	4.291	0.479	0.634									20.864	2.963	88.71	2771	2771	50	38.7	127.88	2.020	14.176	-1.017	0.673	4.455	0.948
1200S200-97	0.1017	1.677	5.71	30.417	5.069	4.258	0.635	0.615									30.175	4.66	139.51	8147	7411	50	38.1	211.89	5.783	19.150	-0.987	0.656	4.414	0.950
1200S250-54[1]	0.0566	1.009	3.43	19.681	3.280	4.416	0.683	0.823									18.433	2.149	64.34	1377	1377	50	48.3	97.54	1.078	19.505	-1.378	0.892	4.699	0.914
1200S250-68	0.0713	1.263	4.30	24.484	4.081	4.402	0.836	0.813									23.575	3.007	90.04	2771	2771	50	48.1	136.25	2.141	24.034	-1.362	0.884	4.679	0.915
1200S250-97	0.1017	1.779	6.05	34.016	5.669	4.373	1.121	0.794									33.835	5.037	150.82	8147	7411	50	47.5	225.75	6.134	32.734	-1.329	0.867	4.639	0.918
1200S300-54[1]	0.0566	1.066	3.63	21.699	3.617	4.512	1.074	1.004									21.440	2.272	68.04	1377	1377	50	57.4	101.29	1.138	30.051	-1.743	1.111	4.940	0.876
1200S300-68	0.0713	1.335	4.54	27.020	4.503	4.499	1.320	0.994									26.783	3.317	99.32	2771	2771	50	57.2	141.60	2.262	37.126	-1.726	1.103	4.921	0.877
1200S300-97	0.1017	1.881	6.40	37.616	6.269	4.472	1.786	0.974									37.616	5.831	174.57	8147	7411	50	56.7	235.55	6.484	50.853	-1.691	1.085	4.880	0.880

Notes:

1. h/t exceeds 200
2. h value used for h/t calculation is the flat width of the web. For (S) members, this is the out-to-out member size, minus twice the thickness, minus twice the inside bend radius
3. h/t values exceeding 260 are marked with a dash (-)
4. h/t values in this table apply to S (studs and joists) members only, and do not apply to tracks and channels

Structural Section Properties for Tracks

Member (in)	Design Thickness (in2)	Gross							Effective Properties (Fy=33 ksi)					Effective Properties (Fy=50 ksi)					Torsional Properties					
		Area (lb/ft)	Weight (in4)	Ix (in3)	Sx (in)	Rx (in4)	Iy (in)	Ry (in4)	Ixe (in3)	Sxe (in-k)	Mal (lb)	Vag (ksi)	Fya (in4)	Ixe (in3)	Sxe (in-k)	Mal (lb)	Vag (ksi)	Fya (in4)	Jx1000 (in6)	Cw (in)	Xo (in)	m (in)	Ro	β
250T125-33	0.0346	0.173	0.59	0.192	0.145	1.054	0.027	0.397	0.166	0.103	2.03	1024	33.0						0.069	0.033	-0.760	0.456	1.358	0.687
250T125-43	0.0451	0.225	0.77	0.250	0.188	1.055	0.035	0.395	0.231	0.147	2.91	1356	33.0						0.153	0.042	-0.755	0.453	1.356	0.690
250T125-54	0.0566	0.282	0.96	0.318	0.236	1.062	0.043	0.392						0.297	0.188	5.64	2563	50	0.301	0.054	-0.749	0.449	1.357	0.696
250T125-68	0.0713	0.355	1.21	0.408	0.297	1.072	0.054	0.389						0.402	0.262	7.85	3199	50	0.602	0.069	-0.740	0.444	1.360	0.704
250T125-97	0.1017	0.506	1.72	0.604	0.423	1.092	0.074	0.383						0.604	0.423	12.67	4476	50	1.745	0.101	-0.724	0.434	1.365	0.719
250T150-33	0.0346	0.190	0.65	0.221	0.167	1.079	0.045	0.485	0.179	0.107	2.11	1024	33.0						0.076	0.054	-0.973	0.573	1.532	0.596
250T150-43	0.0451	0.248	0.84	0.289	0.217	1.080	0.058	0.483	0.252	0.154	3.03	1356	33.0						0.168	0.070	-0.968	0.570	1.529	0.599
250T150-54	0.0566	0.311	1.06	0.368	0.273	1.088	0.072	0.481						0.325	0.197	5.89	2563	50	0.332	0.089	-0.961	0.566	1.529	0.605
250T150-68	0.0713	0.391	1.33	0.472	0.344	1.099	0.089	0.478						0.445	0.276	8.27	3199	50	0.663	0.114	-0.953	0.561	1.531	0.613
250T150-97	0.1017	0.557	1.90	0.701	0.491	1.121	0.124	0.471						0.701	0.463	13.86	4476	50	1.921	0.168	-0.935	0.550	1.534	0.629
250T200-33	0.0346	0.225	0.76	0.280	0.212	1.117	0.097	0.658	0.203	0.112	2.22	1024	33.0						0.090	0.118	-1.418	0.813	1.921	0.455
250T200-43	0.0451	0.293	1.00	0.366	0.275	1.118	0.126	0.657	0.288	0.163	3.21	1356	33.0						0.198	0.153	-1.413	0.810	1.918	0.457
250T200-54	0.0566	0.367	1.25	0.466	0.346	1.127	0.157	0.654						0.371	0.209	6.25	2563	50	0.392	0.195	-1.405	0.806	1.917	0.462
250T200-68	0.0713	0.462	1.57	0.600	0.437	1.139	0.196	0.652						0.517	0.296	8.86	3199	50	0.783	0.251	-1.396	0.800	1.916	0.469
250T200-97	0.1017	0.659	2.24	0.893	0.626	1.165	0.275	0.646						0.856	0.510	15.27	4476	50	2.271	0.374	-1.376	0.789	1.915	0.484
250T250-43	0.0451	0.338	1.15	0.443	0.333	1.146	0.230	0.826	0.318	0.169	3.34	1356	33.0						0.229	0.283	-1.873	1.053	2.346	0.362
250T250-54	0.0566	0.424	1.44	0.565	0.419	1.155	0.287	0.824						0.410	0.217	6.50	2563	50	0.453	0.361	-1.865	1.049	2.343	0.366
250T250-68	0.0713	0.534	1.82	0.728	0.530	1.168	0.360	0.821						0.576	0.310	9.27	3199	50	0.904	0.466	-1.855	1.043	2.341	0.372
250T250-97	0.1017	0.761	2.59	1.086	0.761	1.195	0.506	0.815						0.972	0.541	16.20	4476	50	2.622	0.696	-1.834	1.031	2.336	0.384
350T125-33	0.0346	0.207	0.71	0.405	0.222	1.397	0.030	0.379	0.354	0.165	3.27	1024	33.0						0.083	0.070	-0.668	0.414	1.594	0.824
350T125-43	0.0451	0.270	0.92	0.528	0.288	1.397	0.038	0.377	0.490	0.233	4.61	1739	33.0						0.183	0.090	-0.663	0.412	1.592	0.826
350T125-54	0.0566	0.339	1.15	0.668	0.361	1.404	0.048	0.375						0.626	0.297	8.89	3372	50	0.362	0.114	-0.658	0.408	1.595	0.830
350T125-68	0.0713	0.427	1.45	0.851	0.454	1.412	0.059	0.372						0.839	0.407	12.18	4536	50	0.723	0.144	-0.650	0.403	1.599	0.835
350T125-97	0.1017	0.608	2.07	1.243	0.645	1.430	0.081	0.366						1.243	0.645	19.30	6383	50	2.096	0.209	-0.636	0.394	1.607	0.844
350T150-33	0.0346	0.225	0.76	0.461	0.253	1.432	0.049	0.469	0.382	0.171	3.39	1024	33.0						0.090	0.114	-0.866	0.527	1.738	0.752
350T150-43	0.0451	0.293	1.00	0.601	0.328	1.433	0.064	0.467	0.531	0.243	4.80	1739	33.0						0.198	0.148	-0.861	0.525	1.736	0.754
350T150-54	0.0566	0.367	1.25	0.761	0.412	1.440	0.079	0.465						0.679	0.310	9.28	3372	50	0.392	0.187	-0.855	0.521	1.738	0.758
350T150-68	0.0713	0.462	1.57	0.972	0.518	1.450	0.099	0.462						0.919	0.428	12.81	4536	50	0.783	0.238	-0.847	0.516	1.741	0.763
350T150-97	0.1017	0.659	2.24	1.422	0.738	1.469	0.136	0.455						1.422	0.701	20.98	6383	50	2.271	0.346	-0.831	0.506	1.748	0.774
350T200-33	0.0346	0.259	0.88	0.574	0.315	1.487	0.108	0.647	0.428	0.181	3.57	1024	33.0						0.103	0.249	-1.285	0.761	2.069	0.614
350T200-43	0.0451	0.338	1.15	0.749	0.409	1.489	0.140	0.645	0.600	0.257	5.09	1739	33.0						0.229	0.323	-1.280	0.758	2.066	0.616
350T200-54	0.0566	0.424	1.44	0.949	0.513	1.496	0.175	0.642						0.770	0.329	9.85	3372	50	0.453	0.409	-1.273	0.754	2.067	0.621
350T200-68	0.0713	0.534	1.82	1.213	0.647	1.508	0.218	0.639						1.054	0.458	13.71	4536	50	0.904	0.522	-1.264	0.749	2.069	0.626
350T200-97	0.1017	0.761	2.59	1.780	0.923	1.530	0.305	0.633						1.708	0.769	23.01	6383	50	2.622	0.765	-1.247	0.738	2.073	0.638
350T250-43	0.0451	0.383	1.30	0.896	0.490	1.530	0.257	0.819	0.659	0.268	5.29	1739	33.0						0.260	0.593	-1.719	0.996	2.443	0.505
350T250-54	0.0566	0.480	1.63	1.137	0.615	1.538	0.321	0.817						0.846	0.343	10.26	3372	50	0.513	0.752	-1.712	0.992	2.442	0.509
350T250-68	0.0713	0.605	2.06	1.454	0.776	1.550	0.401	0.814						1.168	0.479	14.35	4536	50	1.025	0.961	-1.703	0.987	2.443	0.514
350T250-97	0.1017	0.862	2.93	2.139	1.109	1.575	0.563	0.808						1.924	0.815	24.39	6383	50	2.973	1.413	-1.684	0.975	2.443	0.525
362T125-33	0.0346	0.212	0.72	0.438	0.232	1.438	0.030	0.377	0.384	0.174	3.44	1024	33.0						0.085	0.076	-0.658	0.409	1.626	0.836
362T125-43	0.0451	0.276	0.94	0.571	0.302	1.439	0.039	0.375	0.531	0.245	4.84	1739	33.0						0.187	0.098	-0.654	0.407	1.625	0.838
362T125-54	0.0566	0.346	1.18	0.723	0.378	1.445	0.048	0.373						0.678	0.312	9.34	3372	50	0.369	0.123	-0.648	0.404	1.627	0.841
362T125-68	0.0713	0.436	1.48	0.921	0.475	1.454	0.060	0.370						0.907	0.427	12.78	4703	50	0.738	0.156	-0.641	0.399	1.631	0.846
362T125-97	0.1017	0.621	2.11	1.343	0.675	1.471	0.082	0.363						1.343	0.675	20.20	6622	50	2.140	0.226	-0.626	0.390	1.639	0.854
362T150-33	0.0346	0.229	0.78	0.499	0.264	1.475	0.050	0.467	0.414	0.180	3.56	1024	33.0						0.091	0.124	-0.854	0.522	1.767	0.766
362T150-43	0.0451	0.298	1.02	0.650	0.343	1.476	0.064	0.465	0.574	0.255	5.04	1739	33.0						0.202	0.160	-0.850	0.519	1.766	0.768
362T150-54	0.0566	0.374	1.27	0.823	0.431	1.483	0.080	0.462						0.735	0.325	9.74	3372	50	0.400	0.202	-0.844	0.516	1.768	0.772
362T150-68	0.0713	0.471	1.60	1.050	0.542	1.492	0.099	0.459						0.993	0.449	13.43	4703	50	0.799	0.257	-0.836	0.511	1.771	0.777
362T150-97	0.1017	0.672	2.29	1.534	0.771	1.512	0.138	0.453						1.534	0.733	21.94	6622	50	2.315	0.374	-0.820	0.501	1.778	0.787
362T200-33	0.0346	0.264	0.90	0.619	0.328	1.532	0.110	0.645	0.464	0.190	3.76	1024	33.0						0.105	0.269	-1.270	0.754	2.092	0.631
362T200-43	0.0451	0.343	1.17	0.808	0.427	1.534	0.142	0.643	0.649	0.270	5.34	1739	33.0						0.233	0.350	-1.265	0.752	2.090	0.633
362T200-54	0.0566	0.431	1.47	1.024	0.536	1.541	0.177	0.640						0.832	0.345	10.34	3372	50	0.460	0.442	-1.259	0.748	2.091	0.637
362T200-68	0.0713	0.543	1.85	1.307	0.675	1.552	0.221	0.638						1.138	0.480	14.37	4703	50	0.919	0.564	-1.250	0.743	2.093	0.643
362T200-97	0.1017	0.773	2.63	1.917	0.963	1.575	0.308	0.631						1.839	0.803	24.06	6622	50	2.666	0.825	-1.232	0.732	2.097	0.655
362T250-43	0.0451	0.389	1.32	0.966	0.510	1.577	0.260	0.818	0.713	0.281	5.56	1739	33.0						0.263	0.641	-1.702	0.990	2.460	0.521
362T250-54	0.0566	0.487	1.66	1.224	0.641	1.585	0.324	0.816						0.914	0.360	10.77	3372	50	0.521	0.812	-1.695	0.986	2.460	0.525
362T250-68	0.0713	0.614	2.09	1.565	0.808	1.597	0.406	0.813						1.259	0.502	15.04	4703	50	1.040	1.038	-1.686	0.980	2.460	0.530
362T250-97	0.1017	0.875	2.98	2.300	1.155	1.621	0.570	0.807						2.069	0.851	25.49	6622	50	3.016	1.524	-1.667	0.969	2.461	0.541
400T125-33	0.0346	0.225	0.76	0.549	0.265	1.563	0.031	0.371	0.484	0.201	3.97	940	33.0						0.090	0.095	-0.630	0.396	1.725	0.867
400T125-43	0.0451	0.293	1.00	0.716	0.344	1.563	0.040	0.369	0.666	0.282	5.57	1739	33.0						0.198	0.122	-0.626	0.394	1.724	0.868
400T125-54	0.0566	0.367	1.25	0.904	0.431	1.569	0.049	0.366						0.849	0.359	10.74	3372	50	0.392	0.154	-0.621	0.390	1.727	0.871
400T125-68	0.0713	0.462	1.57	1.150	0.541	1.577	0.061	0.363						1.134	0.488	14.62	5205	50	0.783	0.194	-0.614	0.386	1.731	0.874
400T125-97	0.1017	0.659	2.24	1.673	0.768	1.594	0.084	0.357						1.673	0.768	23.00	7337	50	2.271	0.280	-0.600	0.377	1.740	0.881
400T150-33	0.0346	0.242	0.82	0.622	0.300	1.603	0.051	0.460	0.519	0.208	4.12	940	33.0						0.097	0.155	-0.821	0.507	1.859	0.805
400T150-43	0.0451	0.315	1.07	0.811	0.390	1.604	0.066	0.458	0.719	0.293	5.80	1739	33.0						0.214	0.200	-0.817	0.504	1.857	0.807
400T150-54	0.0566	0.396	1.35	1.025	0.489	1.610	0.082	0.456						0.918	0.374	11.19	3372	50	0.422	0.252	-0.811	0.501	1.860	0.810
400T150-68	0.0713	0.498	1.69	1.306	0.615	1.619	0.102	0.453						1.237	0.513	15.35	5205	50	0.844	0.320	-0.804	0.496	1.864	0.814
400T150-97	0.1017	0.710	2.41	1.903	0.874	1.638	0.141	0.447						1.903	0.832	24.92	7337	50	2.447	0.463	-0.788	0.487	1.872	0.823
400T200-33	0.0346	0.277	0.94	0.768	0.371	1.666	0.113	0.639	0.581	0.220	4.34	940	33.0						0.110	0.336	-1.229	0.737	2.166	0.678
400T200-43	0.0451	0.360	1.23	1.002	0.482	1.668	0.146	0.637	0.811	0.311	6.14	1739	33.0						0.244	0.436	-1.224	0.734	2.164	0.680
400T200-54	0.0566	0.452	1.54	1.268	0.604	1.675	0.182	0.635						1.037	0.397	11.88	3372	50	0.483	0.551	-1.217	0.730	2.165	0.684
400T200-68	0.0713	0.569	1.94	1.617	0.761	1.685	0.227	0.632						1.412	0.549	16.42	5205	50	0.965	0.702	-1.209	0.725	2.168	0.689
400T200-97	0.1017	0.811	2.76	2.363	1.085	1.707	0.317	0.625						2.268	0.911	27.28	7337	50	2.797	1.022	-1.192	0.715	2.173	0.699
400T250-43	0.0451	0.405	1.38	1.193	0.573	1.715	0.268	0.813	0.888	0.324	6.40	1739	33.0						0.275	0.799	-1.653	0.970	2.517	0.569
400T250-54	0.0566	0.509	1.73	1.511	0.720	1.723	0.335	0.811						1.137	0.413	12.38	3372	50	0.543	1.011	-1.646	0.966	2.517	0.572
400T250-68	0.0713	0.641	2.18	1.928	0.907	1.735	0.418	0.808						1.559	0.574	17.19	5205	50	1.086	1.289	-1.637	0.961	2.518	0.578
400T250-97	0.1017	0.913	3.11	2.823	1.296	1.758	0.587	0.802						2.546	0.965	28.89	7337	50	3.148	1.886	-1.618	0.950	2.521	0.588

Structural Section Properties for Tracks

Member	Design TThickness (in)	Gross							Effective Properties (Fy=33 ksi)					Effective Properties (Fy=50 ksi)					Torsional Properties					
		Area (in2)	Weight –(lb/ft)	Ix (in4)	Sx (in3)	Rx (in)	Iy (in4)	Ry (in)	Ixe (in4)	Sxe (in3)	Mal (in-k)	Vag (lb)	Fya (ksi)	Ixe (in4)	Sxe (in3)	Mal (in-k)	Vag (lb)	Fya (ksi)	Jx1000 (in4)	Cw (in6)	Xo (in)	m (in)	Ro (in)	β
550T125-33	0.0346	0.277	0.94	1.159	0.410	2.046	0.033	0.346	1.029	0.270	5.33	680	33.0						0.110	0.195	-0.541	0.350	2.145	0.936
550T125-43	0.0451	0.360	1.23	1.510	0.533	2.047	0.043	0.344	1.428	0.416	8.23	1504	33.0						0.244	0.252	-0.537	0.348	2.144	0.937
550T125-54	0.0566	0.452	1.54	1.903	0.668	2.052	0.053	0.342						1.811	0.535	16.01	2980	50	0.483	0.315	-0.532	0.345	2.147	0.939
550T125-68	0.0713	0.569	1.94	2.412	0.839	2.058	0.066	0.339						2.379	0.769	23.02	5350	50	0.965	0.397	-0.526	0.341	2.152	0.940
550T125-97	0.1017	0.811	2.76	3.483	1.190	2.072	0.090	0.333						3.483	1.190	35.62	10197	50	2.797	0.564	-0.514	0.333	2.161	0.943
550T150-33	0.0346	0.294	1.00	1.295	0.459	2.099	0.055	0.434	1.115	0.310	6.12	680	33.0						0.117	0.320	-0.714	0.455	2.259	0.900
550T150-43	0.0451	0.383	1.30	1.688	0.596	2.099	0.072	0.432	1.516	0.468	9.25	1504	33.0						0.260	0.414	-0.709	0.452	2.258	0.901
550T150-54	0.0566	0.480	1.63	2.128	0.747	2.105	0.089	0.430						1.928	0.595	17.81	2980	50	0.513	0.519	-0.704	0.449	2.261	0.903
550T150-68	0.0713	0.605	2.06	2.699	0.939	2.112	0.110	0.427						2.569	0.804	24.07	5350	50	1.025	0.655	-0.698	0.445	2.265	0.905
550T150-97	0.1017	0.862	2.93	3.904	1.333	2.128	0.153	0.421						3.904	1.278	38.27	10197	50	2.973	0.937	-0.684	0.436	2.275	0.909
550T200-33	0.0346	0.329	1.12	1.567	0.555	2.184	0.123	0.613	1.246	0.307	6.06	680	33.0						0.131	0.694	-1.088	0.674	2.516	0.813
550T200-43	0.0451	0.428	1.46	2.043	0.722	2.185	0.160	0.611	1.690	0.495	9.79	1504	33.0						0.290	0.900	-1.083	0.671	2.514	0.814
550T200-54	0.0566	0.537	1.83	2.578	0.905	2.191	0.199	0.609						2.153	0.630	18.86	2980	50	0.573	1.133	-1.077	0.668	2.517	0.817
550T200-68	0.0713	0.676	2.30	3.274	1.139	2.200	0.248	0.606						2.894	0.857	25.67	5350	50	1.146	1.434	-1.070	0.663	2.521	0.820
550T200-97	0.1017	0.964	3.28	4.746	1.621	2.219	0.347	0.600						4.566	1.391	41.64	10197	50	3.323	2.067	-1.055	0.653	2.529	0.826
550T250-43	0.0451	0.473	1.61	2.399	0.848	2.252	0.295	0.790	1.841	0.516	10.20	1504	33.0						0.321	1.643	-1.484	0.899	2.810	0.721
550T250-54	0.0566	0.594	2.02	3.029	1.063	2.259	0.368	0.788						2.405	0.657	19.66	2980	50	0.634	2.070	-1.478	0.895	2.812	0.724
550T250-68	0.0713	0.748	2.54	3.849	1.339	2.269	0.460	0.785						3.201	0.897	26.86	5350	50	1.267	2.627	-1.470	0.890	2.815	0.727
550T250-97	0.1017	1.066	3.63	5.588	1.908	2.290	0.646	0.779						5.073	1.470	44.01	10197	50	3.674	3.801	-1.453	0.880	2.822	0.735
600T125-33	0.0346	0.294	1.00	1.428	0.465	2.204	0.034	0.339	1.258	0.297	5.87	622	33.0						0.117	0.238	-0.516	0.337	2.289	0.949
600T125-43	0.0451	0.383	1.30	1.861	0.604	2.205	0.044	0.337	1.768	0.461	9.11	1377	33.0						0.260	0.307	-0.513	0.335	2.288	0.950
600T125-54	0.0566	0.480	1.63	2.344	0.756	2.209	0.054	0.335						2.241	0.592	17.73	2728	50	0.513	0.384	-0.508	0.332	2.291	0.951
600T125-68	0.0713	0.605	2.06	2.969	0.950	2.215	0.067	0.332						2.934	0.858	25.69	5350	50	1.025	0.483	-0.503	0.329	2.296	0.952
600T125-97	0.1017	0.862	2.93	4.281	1.347	2.228	0.092	0.326						4.281	1.347	40.33	10885	50	2.973	0.685	-0.491	0.321	2.305	0.955
600T150-33	0.0346	0.311	1.06	1.590	0.517	2.260	0.057	0.426	1.334	0.303	5.99	622	33.0						0.124	0.390	-0.684	0.439	2.399	0.919
600T150-43	0.0451	0.405	1.38	2.072	0.673	2.261	0.073	0.424	1.890	0.474	9.36	1377	33.0						0.275	0.504	-0.680	0.437	2.398	0.920
600T150-54	0.0566	0.509	1.73	2.611	0.843	2.266	0.091	0.422						2.400	0.609	18.24	2728	50	0.543	0.632	-0.675	0.434	2.401	0.921
600T150-68	0.0713	0.641	2.18	3.309	1.059	2.273	0.113	0.419						3.162	0.891	26.68	5350	50	1.086	0.797	-0.669	0.430	2.406	0.923
600T150-97	0.1017	0.913	3.11	4.778	1.504	2.288	0.156	0.413						4.778	1.444	43.23	10885	50	3.148	1.138	-0.656	0.421	2.415	0.926
600T200-33	0.0346	0.346	1.18	1.913	0.622	2.352	0.126	0.604	1.542	0.333	6.59	622	33.0						0.138	0.847	-1.048	0.655	2.645	0.843
600T200-43	0.0451	0.451	1.53	2.494	0.809	2.353	0.163	0.602	2.076	0.565	11.16	1377	33.0						0.305	1.098	-1.044	0.652	2.643	0.844
600T200-54	0.0566	0.565	1.92	3.145	1.015	2.359	0.203	0.600						2.641	0.717	21.48	2728	50	0.604	1.381	-1.038	0.649	2.646	0.846
600T200-68	0.0713	0.712	2.42	3.990	1.277	2.367	0.254	0.597						3.540	0.973	29.12	5350	50	1.206	1.746	-1.031	0.644	2.650	0.849
600T200-97	0.1017	1.015	3.45	5.773	1.816	2.385	0.354	0.591						5.558	1.568	46.94	10885	50	3.499	2.510	-1.016	0.635	2.659	0.854
600T250-43	0.0451	0.496	1.69	2.916	0.946	2.425	0.303	0.781	2.322	0.563	11.13	1377	33.0						0.336	2.004	-1.436	0.878	2.925	0.759
600T250-54	0.0566	0.622	2.12	3.678	1.187	2.432	0.377	0.779						2.953	0.732	21.92	2728	50	0.664	2.523	-1.430	0.874	2.927	0.761
600T250-68	0.0713	0.783	2.67	4.670	1.495	2.442	0.472	0.776						3.918	1.017	30.46	5350	50	1.327	3.198	-1.422	0.869	2.930	0.764
600T250-97	0.1017	1.116	3.80	6.767	2.129	2.462	0.662	0.770						6.157	1.656	49.58	10885	50	3.849	4.616	-1.406	0.859	2.938	0.771
800T125-33[1]	0.0346	0.363	1.24	2.895	0.711	2.824	0.036	0.313	2.441	0.407	8.03	465	33.0						0.145	0.456	-0.439	0.294	2.875	0.977
800T125-43	0.0451	0.473	1.61	3.773	0.924	2.824	0.046	0.311	3.484	0.640	12.65	1030	33.0						0.321	0.589	-0.436	0.292	2.874	0.977
800T125-54	0.0566	0.594	2.02	4.745	1.158	2.827	0.057	0.309						4.426	0.824	24.66	2039	50	0.634	0.735	-0.432	0.289	2.877	0.977
800T125-68	0.0713	0.748	2.54	5.998	1.454	2.833	0.070	0.306						5.956	1.216	36.39	4087	50	1.267	0.920	-0.427	0.286	2.881	0.978
800T125-97	0.1017	1.066	3.63	8.613	2.062	2.843	0.096	0.301						8.613	2.062	61.72	10885	50	3.674	1.296	-0.417	0.279	2.889	0.979
800T150-33[1]	0.0346	0.380	1.29	3.180	0.781	2.891	0.060	0.397	2.569	0.414	8.18	465	33.0						0.152	0.751	-0.588	0.388	2.977	0.961
800T150-43	0.0451	0.496	1.69	4.144	1.015	2.891	0.077	0.395	3.689	0.655	12.95	1030	33.0						0.336	0.972	-0.584	0.386	2.976	0.961
800T150-54	0.0566	0.622	2.12	5.214	1.272	2.896	0.096	0.393						4.692	0.844	25.27	2039	50	0.664	1.215	-0.580	0.383	2.979	0.962
800T150-68	0.0713	0.783	2.67	6.594	1.599	2.902	0.119	0.390						6.361	1.255	37.58	4087	50	1.327	1.526	-0.575	0.379	2.984	0.963
800T150-97	0.1017	1.116	3.80	9.479	2.269	2.914	0.165	0.384						9.479	2.192	65.62	10885	50	3.849	2.162	-0.564	0.372	2.993	0.965
800T200-33[1]	0.0346	0.415	1.41	3.749	0.921	3.005	0.135	0.571	2.788	0.424	8.37	465	33.0						0.166	1.638	-0.917	0.589	3.194	0.918
800T200-43	0.0451	0.541	1.84	4.887	1.197	3.006	0.175	0.569	4.043	0.676	13.35	1030	33.0						0.367	2.124	-0.913	0.587	3.193	0.918
800T200-54	0.0566	0.679	2.31	6.152	1.501	3.011	0.218	0.567						5.149	0.871	26.09	2039	50	0.725	2.664	-0.908	0.584	3.196	0.919
800T200-68	0.0713	0.854	2.91	7.786	1.888	3.019	0.272	0.564						7.051	1.310	39.22	4087	50	1.448	3.357	-0.902	0.580	3.201	0.921
800T200-97	0.1017	1.218	4.15	11.212	2.683	3.034	0.379	0.558						10.833	2.347	70.27	10885	50	4.200	4.792	-0.889	0.571	3.210	0.923
800T250-43	0.0451	0.586	1.99	5.629	1.380	3.100	0.326	0.746	4.655	0.739	14.60	1030	33.0						0.397	3.877	-1.274	0.801	3.433	0.862
800T250-54	0.0566	0.735	2.50	7.090	1.730	3.106	0.407	0.744						5.902	0.959	28.71	2039	50	0.785	4.870	-1.268	0.798	3.436	0.864
800T250-68	0.0713	0.926	3.15	8.978	2.177	3.114	0.509	0.741						7.756	1.560	46.72	4087	50	1.569	6.151	-1.261	0.793	3.441	0.866
800T250-97	0.1017	1.320	4.49	12.944	3.098	3.132	0.713	0.735						11.872	2.487	74.47	10885	50	4.550	8.818	-1.247	0.784	3.450	0.869
1000T125-43[1]	0.0451	0.563	1.92	6.630	1.305	3.431	0.047	0.290	5.886	0.819	16.19	822	33.0						0.382	0.973	-0.379	0.259	3.464	0.988
1000T125-54	0.0566	0.707	2.41	8.333	1.634	3.434	0.059	0.288						7.479	1.055	31.59	1628	50	0.755	1.212	-0.376	0.256	3.466	0.988
1000T125-68	0.0713	0.890	3.03	10.522	2.053	3.438	0.073	0.286						10.155	1.575	47.15	3261	50	1.508	1.515	-0.372	0.253	3.470	0.989
1000T125-97	0.1017	1.269	4.32	15.077	2.912	3.447	0.100	0.280						15.077	2.753	82.42	9507	50	4.375	2.123	-0.363	0.247	3.477	0.989
1000T150-43[1]	0.0451	0.586	1.99	7.207	1.419	3.507	0.080	0.370	6.195	0.837	16.54	822	33.0						0.397	1.612	-0.513	0.345	3.564	0.979
1000T150-54	0.0566	0.735	2.50	9.061	1.777	3.511	0.100	0.368						7.880	1.079	32.29	1628	50	0.785	2.013	-0.509	0.342	3.567	0.980
1000T150-68	0.0713	0.926	3.15	11.445	2.233	3.516	0.124	0.366						10.774	1.621	48.53	3261	50	1.569	2.522	-0.505	0.339	3.571	0.980
1000T150-97	0.1017	1.320	4.49	16.413	3.170	3.526	0.171	0.360						16.413	2.902	86.90	9507	50	4.550	3.557	-0.495	0.332	3.579	0.981
1000T200-43[1]	0.0451	0.631	2.15	8.361	1.646	3.640	0.183	0.539	6.722	0.861	17.01	822	33.0						0.428	3.540	-0.813	0.534	3.769	0.953
1000T200-54	0.0566	0.792	2.69	10.516	2.062	3.645	0.228	0.537						8.560	1.111	33.26	1628	50	0.845	4.434	-0.809	0.531	3.772	0.954
1000T200-68	0.0713	0.997	3.39	13.292	2.594	3.651	0.284	0.534						11.820	1.684	50.42	3261	50	1.690	5.576	-0.803	0.527	3.776	0.955
1000T200-97	0.1017	1.422	4.84	19.087	3.686	3.664	0.397	0.528						18.583	3.081	92.25	9507	50	4.901	7.924	-0.791	0.519	3.786	0.956
1000T250-43[1]	0.0451	0.676	2.30	9.515	1.873	3.751	0.344	0.713	7.283	0.876	17.32	822	33.0						0.458	6.477	-1.147	0.737	3.987	0.917
1000T250-54	0.0566	0.848	2.89	11.972	2.348	3.757	0.429	0.711						9.309	1.132	33.89	1628	50	0.906	8.125	-1.142	0.734	3.990	0.918
1000T250-68	0.0713	1.068	3.64	15.138	2.954	3.764	0.536	0.708						12.867	1.726	51.68	3261	50	1.810	10.240	-1.135	0.730	3.995	0.919
1000T250-97	0.1017	1.523	5.18	21.760	4.202	3.780	0.751	0.702						20.304	3.201	95.84	9507	50	5.252	14.617	-1.122	0.721	4.005	0.921

Notes:

1. h/t exceeds 200
2. h value used for h/t calculation is the flat width of the web. For (S) members, this is the out-to-out member size, minus twice the thickness, minus twice the inside bend radius
3. h/t values exceeding 260 are marked with a dash (-)
4. h/t values in this table apply to S (studs and joists) members only, and do not apply to tracks and channels

Structural Section Properties for Tracks

Member	Design Thickness	Gross							Effective Properties (Fy=33 ksi)					Effective Properties (Fy=50 ksi)					Torsional Properties					
		Area	Weight	Ix	Sx	Rx	Iy	Ry	Ixe	Sxe	Mal	Vag	Fya	Ixe	Sxe	Mal	Vag	Fya	Jx1000	Cw	Xo	m	Ro	β
1200T125-54[1]	0.0566	0.820	2.79	13.335	2.186	4.033	0.060	0.271						11.460	1.286	38.51	1354	50	0.876	1.820	-0.333	0.230	4.055	0.993
1200T125-68	0.0713	1.033	3.51	16.826	2.747	4.036	0.074	0.268						15.686	1.934	57.90	2713	50	1.750	2.270	-0.329	0.227	4.059	0.993
1200T125-97	0.1017	1.472	5.01	24.078	3.897	4.044	0.102	0.263						23.751	3.442	103.06	7902	50	5.076	3.171	-0.322	0.222	4.065	0.994
1200T150-54[1]	0.0566	0.848	2.89	14.378	2.357	4.117	0.103	0.348						12.020	1.313	39.31	1354	50	0.906	3.033	-0.454	0.310	4.156	0.988
1200T150-68	0.0713	1.068	3.64	18.148	2.963	4.121	0.127	0.345						16.566	1.987	59.48	2713	50	1.810	3.795	-0.450	0.307	4.160	0.988
1200T150-97	0.1017	1.523	5.18	25.987	4.206	4.130	0.176	0.340						25.719	3.616	108.27	7902	50	5.252	5.335	-0.441	0.301	4.168	0.989
1200T200-54[1]	0.0566	0.905	3.08	16.464	2.699	4.265	0.236	0.510						12.962	1.350	40.41	1354	50	0.966	6.714	-0.730	0.487	4.357	0.972
1200T200-68	0.0713	1.140	3.88	20.791	3.395	4.271	0.294	0.508						18.026	2.058	61.62	2713	50	1.931	8.431	-0.725	0.483	4.362	0.972
1200T200-97	0.1017	1.625	5.53	29.805	4.824	4.283	0.410	0.502						28.959	3.8191	14.35	7902	50	5.602	11.945	-0.714	0.476	4.371	0.973
1200T250-54[1]	0.0566	0.962	3.27	18.550	3.041	4.392	0.445	0.681						14.092	1.374	41.14	1354	50	1.027	12.339	-1.039	0.680	4.565	0.948
1200T250-68	0.0713	1.211	4.12	23.435	3.826	4.399	0.556	0.678						19.608	2.106	63.04	2713	50	2.052	15.529	-1.033	0.676	4.569	0.949
1200T250-97	0.1017	1.727	5.88	33.623	5.442	4.413	0.780	0.672						31.596	3.954	118.37	7902	50	5.953	22.101	-1.021	0.668	4.579	0.950

Notes:
1. h/t exceeds 200
2. h value used for h/t calculation is the flat width of the web. For (S) members, this is the out-to-out member size, minus twice the thickness, minus twice the inside bend radius
3. h/t values exceeding 260 are marked with a dash (-)
4. h/t values in this table apply to S (studs and joists) members only, and do not apply to tracks and channels

CEMCO™
Steel Framing and Metal Lath

Curtain Wall, Non - Composite Wall Limiting Height Tables Notes

1. Studs considered single spanned and unpunched for web crippling and shear.
2. Listed wind pressures represent 1.0 W calculated based on 2009 IBC or 0.6 W calculated based on 2012 IBC. For deflection calculations, listed wind pressures, have been reduced by 0.70 as allowed by IBC. The 5 psf pressure has not been reduced for deflection checks.
3. Web-height thickness ratio exceeds 200. Web stiffeners are required at all support points and concentrated loads. Where limiting heights are followed by "e", web stiffeners are required at ends.
4. Limiting heights based on studs braced against rotation and lateral movement at support with properly fastened sheathing on both flanges over the full height Studs are assumed to be adequately braced at a maximum spacing of Lu to develop full allowable moment, Ma.
5. Limiting heights are based on steel properties only (non-composite).
6. Studs are assumed to be adequately braced at a maximum spacing of Lu to develop full allowable moment, Ma.
7. Web crippling check is based on 1" of bearing at end supports and 3" of bearing at interior support.
8. Shear and web crippling capacity at end supports have NOT been reduced for punchouts. Shear and web crippling capacity at interior support have been reduced for the presence of punchout adjacent to the support.
9. Combined bending and shear check at interior support is based on unreinforced web per AISI S100 (Eq. C3.3.1-1). Shear capacity and combined bending and shear check at interior support have been reduced for the presence of punchouts adjacent to support.
10. Allowable moment is lesser of Mal and Mad. Stud distortional buckling is based on an assumed KΦ=0.

	Spacing		5 psf			15 psf			20 psf			25 psf			30 psf			40 psf		
Section	Fy (ksi)	(in) oc	L/120	L/240	L/360	L/240	L/360	L/600	L/240	L/360	L/600	L/240	L/360	L/600	L/240	L/360	L/600	L/240	L/360	L/600
250S137-33	33	12	17′ 5″	13′ 10″	12′ 1″	10′ 9″	9′ 5″	7′ 11″	9′ 10″	8′ 7″	7′ 2″	9′ 0″	7′ 11″	6′ 8″	8′ 3″	7′ 6″	6′ 3″	7′ 2″	6′ 9″	5′ 9″
250S137-33	33	16	15′ 10″	12′ 7″	11′ 0″	9′ 10″	8′ 7″	7′ 2″	8′ 9″	7′ 9″	6′ 7″	7′ 10″	7′ 2″	6′ 1″	7′ 2″	6′ 9″	5′ 9″	6′ 2″	6′ 2″	5′ 2″
250S137-33	33	24	13′ 10″	11′ 0″	9′ 7″	8′ 3″	7′ 6″	6′ 3″	7′ 2″	6′ 9″	5′ 9″	6′ 5″	6′ 3″	5′ 4″	5′ 10″ e	5′10″ e	5′ 0″	5′ 0″e	5′ 0″ e	4′ 6″ e
250S162-33	33	12	18′ 4″	14′ 6″	12′ 8″	11′ 4″	9′ 11″	8′ 4″	10′ 3″	9′ 0″	7′ 7″	9′ 7″	8′ 4″	7′ 0″	8′ 10″	7′ 10″	6′ 7″	7′ 8″	7′ 1″	6′ 0″
250S162-33	33	16	16′ 7″	13′ 2″	11′ 6″	10′ 3″	9′ 0″	7′ 7″	9′ 4″	8′ 2″	6′ 10″	8′ 5″	7′ 7″	6′ 5″	7′ 8″	7′ 1″	6′ 0″	6′ 7″e	6′ 6″ e	5′ 5″
250S162-33	33	24	14′ 6″	11′ 6″	10′ 1″	8′ 10″	7′ 10″	6′ 7″	7′ 8″	7′ 1″	6′ 0″	6′ 10″	6′ 7″	5′ 7″	6′ 3″ e	6′ 3″ e	5′ 3″	5′ 5″ e	5′ 5″ e	4′ 9″e
250S137-43	33	12	18′ 11″	15′ 0″	13′ 1″	11′ 9″	10′ 3″	8′ 7′	10′ 8″	9′ 4″	7′ 10″	9′ 11″	8′ 7″	7′ 3″	9′ 4″	8′ 1″	6′ 10″	8′ 5″	7′ 4″	6′ 2″
250S137-43	33	16	17′ 2″	13′ 8″	11′ 11″	10′ 8″	9′ 4″	7′ 10″	9′ 8″	8′ 5″	7′ 1″	9′ 0″	7′ 10″	6′ 7″	8′ 5″	7′ 4″	6′ 2″	7′ 6″	6′ 8″	5′ 8″
250S137-43	33	24	15′ 0″	11′ 11″	10′ 5″	9′ 4″	8′ 1″	6′ 10″	8′ 5″	7′ 4″	6′ 2″	7′ 9″	6′ 10″	5′ 9″	7′ 1″	6′ 5″	5′ 5″	6′ 1″	5′ 10″	4′ 11″
250S162-43	33	12	19′ 11″	15′ 9″	13′ 9″	12′ 4″	10′ 9″	9′ 1″	11′ 2″	9′ 9″	8′ 3″	10′ 5″	9′ 1″	7′ 8″	9′ 9″	8′ 6″	7′ 2″	8′ 10″	7′ 9″	6′ 6″
250S162-43	33	16	18′ 1″	14′ 4″	12′ 6″	11′ 2″	9′ 9″	8′ 3″	10′ 2″	8′ 10″	7′ 6″	9′ 6″	8′ 3″	6′ 11″	8′ 10″	7′ 9″	6′ 6″	8′ 0″	7′ 0″	5′ 11″
250S162-43	33	24	15′ 9″	12′ 6″	10′ 11″	9′ 9″	8′ 6″	7′ 2″	8′ 10″	7′ 9″	6′ 6″	8′ 3″	7′ 2″	6′ 1″	7′ 7″	6′ 9″	5′ 8″	6′ 7″	6′ 2″	5′ 2″
250S137-54	50	12	20′ 3″	16′ 1″	14′ 0″	12′ 6″	10′ 11″	9′ 3″	11′ 5″	9′ 11″	8′ 4″	10′ 7″	9′ 3″	7′ 9″	9′ 11″	8′ 8″	7′ 4″	9′ 0″	7′ 11″	6′ 8″
250S137-54	50	16	18′ 5″	14′ 7″	12′ 9″	11′ 5″	9′ 11″	8′ 4″	10′ 4″	9′ 0″	7′ 7″	9′ 7″	8′ 4″	7′ 1″	9′ 0″	7′ 11″	6′ 8″	8′ 2″	7′ 2″	6′ 0″
250S137-54	50	24	16′ 1″	12′ 9″	11′ 1″	9′ 11″	8′ 8″	7′ 4″	9′ 0″	7′ 11″	6′ 8″	8′ 4″	7′ 4″	6′ 2″	7′ 11″	6′ 11″	5′ 10″	7′ 2″	6′ 3″	5′ 3″
250S162-54	50	12	21′ 3″	16′ 11″	14′ 9″	13′ 2″	11′ 6″	9′ 8″	12′ 0″	10′ 5″	8′ 10″	11′ 1″	9′ 8″	8′ 2″	10′ 5″	9′ 1″	7′ 8″	9′ 6″	8′ 3″	7′ 0″
250S162-54	50	16	19′ 4″	15′ 4″	13′ 5″	12′ 0″	10′ 5″	8′ 10″	10′ 10″	9′ 6″	8′ 0″	10′ 1″	8′ 10″	7′ 5″	9′ 6″	8′ 3″	7′ 0″	8′ 7″	7′ 6″	6′ 4″
250S162-54	50	24	16′ 11″	13′ 5″	11′ 8″	10′ 5″	9′ 1″	7′ 8″	9′ 6″	8′ 3″	7′ 0″	8′ 10″	7′ 8″	6′ 6″	8′ 3″	7′ 3″	6′ 1″	7′ 6″	6′ 7″	5′ 6″
250S137-68	50	12	21′ 7″	17′ 1″	14′ 11″	13′ 4″	11′ 8″	9′ 10″	12′ 2″	10′ 7″	8′ 11″	11′ 3″	9′ 10″	8′ 3″	10′ 7″	9′ 3″	7′ 10″	9′ 7″	8′ 5″	7′ 1″
250S137-68	50	16	19′ 7″	15′ 7″	13′ 7″	12′ 2″	10′ 7″	8′ 11″	11′ 0″	9′ 7″	8′ 1″	10′ 3″	8′ 11″	7′ 6″	9′ 7″	8′ 5″	7′ 1″	8′ 9″	7′ 8″	6′ 5″
250S137-68	50	24	17′ 1″	13′ 7″	11′ 10″	10′ 7″	9′ 3″	7′ 10″	9′ 7″	8′ 5″	7′ 1″	8′ 11″	7′ 10″	6′ 7″	8′ 5″	7′ 4″	6′ 2″	7′ 8″	6′ 8″	5′ 7″
250S162-68	50	12	22′ 9″	18′ 0″	15′ 9″	14′ 1″	12′ 3″	10′ 4″	12′ 9″	11′ 2″	9′ 5″	11′ 11″	10′ 4″	8′ 9″	11′ 2″	9′ 9″	8′ 3″	10′ 2″	8′ 10″	7′ 5″
250S162-68	50	16	20′ 8″	16′ 5″	14′ 4″	12′ 9″	11′ 2″	9′ 5″	11′ 7″	10′ 2″	8′ 6″	10′ 9″	9′ 5″	7′ 11″	10′ 2″	8′ 10″	7′ 5″	9′ 2″	8′ 0″	6′ 9″
250S162-68	50	24	18′ 0″	14′ 4″	12′ 6″	11′ 2″	9′ 9″	8′ 3″	10′ 2″	8′ 10″	7′ 5″	9′ 5″	8′ 3″	6′ 11″	8′ 10″	7′ 9″	6′ 6″	8′ 0″	7′ 0″	5′ 11″
250S137-97	50	12	23′ 8″	18′ 9″	16′ 5″	14′ 8″	12′ 9″	10′ 9″	13′ 4″	11′ 7″	9′ 9″	12′ 4″	10′ 9″	9′ 1″	11′ 7″	10′ 2″	8′ 7″	10′ 7″	9′ 2″	7′ 9″
250S137-97	50	16	21′ 6″	17′ 0″	14′ 11″	13′ 4″	11′ 7″	9′ 9″	12′ 1″	10′ 7″	8′ 11″	11′ 2″	9′ 9″	8′ 3″	10′ 7″	9′ 2″	7′ 9″	9′ 7″	8′ 4″	7′ 1″
250S137-97	50	24	18′ 9″	14′ 11″	13′ 0″	11′ 7″	10′ 2″	8′ 7″	10′ 7″	9′ 2″	7′ 9″	9′ 9″	8′ 7″	7′ 2″	9′ 2″	8′ 0″	6′ 9″	8′ 4″	7′ 4″	6′ 2″
250S162-97	50	12	25′ 0″	19′ 10″	17′ 4″	15′ 5″	13′ 6″	11′ 5″	14′ 0″	12′ 3″	10′ 4″	13′ 0″	11′ 5″	9′ 7″	12′ 3″	10′ 8″	9′ 0″	11′ 2″	9′ 9″	8′ 2″
250S162-97	50	16	22′ 8″	18′ 0″	15′ 9″	14′ 0″	12′ 3″	10′ 4″	12′ 9″	11′ 2″	9′ 5″	11′ 10″	10′ 4″	8′ 9″	11′ 2″	9′ 9″	8′ 2″	10′ 1″	8′ 10″	7′ 5″
250S162-97	50	24	19′ 10″	15′ 9″	13′ 9″	12′ 3″	10′ 8″	9′ 0″	11′ 2″	9′ 9″	8′ 2″	10′ 4″	9′ 0″	7′ 7″	9′ 9″	8′ 6″	7′ 2″	8′ 10″	7′ 8″	6′ 6″
350S137-33	33	12	22′ 7″	17′ 11″	15′ 8″	14′ 0″	12′ 2″	10′ 3″	12′ 1″	11′ 1″	9′ 4″	10′ 10″	10′ 3″	8′ 8″	9′ 10″	9′ 8″	8′ 2″	8′ 6″ e	8′ 6″ e	7′ 5″
350S137-33	33	16	20′ 6″	16′ 3″	14′ 3″	12′ 1″	11′ 1″	9′ 4″	10′ 6″	10′ 1″	8′ 6″	9′ 4″	9′ 4″	7′ 10″	8′ 6″ e	8′ 6″ e	7′ 5″	7′ 5″ e	7′ 5″ e	6′ 9″ e
350S137-33	33	24	17′ 1″	14′ 3″	12′ 5″	9′ 10″	9′ 8″	8′ 2″	8′ 6″ e	8′ 6″ e	7′ 5″	7′ 8″ e	7′ 8″ e	6′ 10″ e	7′ 0″ e	7′ 0″ e	6′ 6″ e	6′ 0″ e	6′ 0″ e	5′ 10″ e
350S162-33	33	12	23′ 8″	18′ 9″	16′ 5″	14′ 8″	12′ 10″	10′ 9″	13′ 0″	11′ 7″	9′ 10″	11′ 7″	10′ 9″	9′ 1″	10′ 7″	10′ 2″	8′ 7″	9′ 2″ e	9′ 2″ e	7′ 9″
350S162-33	33	16	21′ 6″	17′ 1″	14′ 11″	13′ 0″	11′ 7″	9′ 10″	11′ 3″	10′ 7″	8′ 11″	10′ 1″ e	9′ 10″	8′ 3″	9′ 2″ e	9′ 2″ e	7′ 9″	7′ 11″ e	7′ 11″ e	7′ 1″ e
350S162-33	33	24	18′ 4″	14′ 11″	13′ 0″	10′ 7″	10′ 2″	8′ 7″	9′ 2″ e	9′ 2″ e	7′ 9″	8′ 2″ e	8′ 2″ e	7′ 2″ e	7′ 6″ e	7′ 6″ e	6′ 9″ e	6′ 6″ e	6′ 6″ e	6′ 2″ e
350S137-43	33	12	24′ 7″	19′ 6″	17′ 0″	15′ 2″	13′ 3″	11′ 2″	13′ 10″	12′ 1″	10′ 2″	12′ 8″	11′ 2″	9′ 5″	11′ 7″	10′ 6″	8′ 10″	10′ 0″	9′ 7″	8′ 1″
350S137-43	33	16	22′ 4″	17′ 8″	15′ 5″	13′ 10″	12′ 1″	10′ 2″	12′ 3″	10′ 11″	9′ 3″	11′ 0″	10′ 2″	8′ 7″	10′ 0″	9′ 7″	8′ 1″	8′ 8″	8′ 9″	7′ 4″
350S137-43	33	24	19′ 6″	15′ 5″	13′ 6″	11′ 7″	10′ 6″	8′ 10″	10′ 0″	9′ 7″	8′ 1″	8′ 11″	8′ 10″	7′ 6″	8′ 2″	8′ 2″	7′ 0″	7′ 1″ e	7′ 1″ e	6′ 5″
350S162-43	33	12	25′ 9″	20′ 5″	17′ 10″	15′ 11″	13′ 11″	11′ 9″	14′ 6″	12′ 8″	10′ 8″	13′ 5″	11′ 9″	9′ 11″	12′ 6″	11′ 1″	9′ 4″	10′ 10″	10′ 0″	8′ 5″
350S162-43	33	16	23′ 5″	18′ 7″	16′ 2″	14′ 6″	12′ 8″	10′ 8″	13′ 2″	11′ 6″	9′ 8″	11′ 10″	10′ 8″	9′ 0″	10′ 10″	10′ 0″	8′ 5″	9′ 4″	9′ 1″	7′ 8″
350S162-43	33	24	20′ 5″	16′ 2″	14′ 2″	12′ 6″	11′ 1″	9′ 4″	10′ 10″	10′ 0″	8′ 5″	9′ 8″	9′ 4″	7′ 10″	8′ 10″	8′ 9″	7′ 5″	7′ 7″ e	7′ 7″ e	6′ 8″
350S137-54	50	12	26′ 3″	20′ 10″	18′ 3″	16′ 3″	14′ 3″	12′ 0″	14′ 9″	12′ 11″	10′ 11″	13′ 9″	12′ 0″	10′ 1″	12′ 11″	11′ 3″	9′ 6″	11′ 9″	10′ 3″	8′ 8″
350S137-54	50	16	23′ 11″	18′ 11″	16′ 7″	14′ 9″	12′ 11″	10′ 11″	13′ 5″	11′ 9″	9′ 11″	12′ 6″	10′ 11″	9′ 2″	11′ 9″	10′ 3″	8′ 8″	10′ 8″	9′ 4″	7′ 10″
350S137-54	50	24	20′ 10″	16′ 7″	14′ 5″	12′ 11″	11′ 3″	9′ 6″	11′ 9″	10′ 3″	8′ 8″	10′ 11″	9′ 6″	8′ 0″	10′ 3″	8′ 11″	7′ 6″	9′ 4″	8′ 1″	6′ 10″
350S162-54	50	12	27′ 7″	21′ 11″	19′ 1″	17′ 1″	14′ 11″	12′ 7″	15′ 6″	13′ 7″	11′ 5″	14′ 5″	12′ 7″	10′ 7″	13′ 7″	11′ 10″	10′ 0″	12′ 4″	10′ 9″	9′ 1″
350S162-54	50	16	25′ 1″	19′ 11″	17′ 4″	15′ 6″	13′ 7″	11′ 5″	14′ 1″	12′ 4″	10′ 4″	13′ 1″	11′ 5″	9′ 8″	12′ 4″	10′ 9″	9′ 1″	11′ 2″	9′ 9″	8′ 3″
350S162-54	50	24	21′ 11″	17′ 4″	15′ 2″	13′ 7″	11′ 10″	10′ 0″	12′ 4″	10′ 9″	9′ 1″	11′ 5″	10′ 0″	8′ 5″	10′ 9″	9′ 5″	7′ 11″	9′ 9″	8′ 6″	7′ 2″
350S137-68	50	12	28′ 1″	22′ 3″	19′ 6″	17′ 5″	15′ 2″	12′ 10″	15′ 10″	13′ 10″	11′ 8″	14′ 8″	12′ 10″	10′ 10″	13′ 10″	12′ 1″	10′ 2″	12′ 6″	10′ 11″	9′ 3″
350S137-68	50	16	25′ 6″	20′ 3″	17′ 8″	15′ 10″	13′ 10″	11′ 8″	14′ 4″	12′ 6″	10′ 7″	13′ 4″	11′ 8″	9′ 10″	12′ 6″	10′ 11″	9′ 3″	11′ 5″	9′ 11″	8′ 5″
350S137-68	50	24	22′ 3″	17′ 8″	15′ 5″	13′ 10″	12′ 1″	10′ 2″	12′ 6″	10′ 11″	9′ 3″	11′ 8″	10′ 2″	8′ 7″	10′ 11″	9′ 7″	8′ 1″	9′ 11″	8′ 8″	7′ 4″
350S162-68	50	12	29′ 6″	23′ 5″	20′ 5″	18′ 3″	16′ 0″	13′ 5″	16′ 7″	14′ 6″	12′ 3″	15′ 5″	13′ 5″	11′ 4″	14′ 6″	12′ 8″	10′ 8″	13′ 2″	11′ 6″	9′ 8″
350S162-68	50	16	26′ 10″	21′ 3″	18′ 7″	16′ 7″	14′ 6″	12′ 3″	15′ 1″	13′ 2″	11′ 1″	14′ 0″	12′ 3″	10′ 4″	13′ 2″	11′ 6″	9′ 9″	12′ 0″	10′ 5″	8′ 10″
350S162-68	50	24	23′ 5″	18′ 7″	16′ 3″	14′ 6″	12′ 8″	10′ 8″	13′ 2″	11′ 6″	9′ 8″	12′ 3″	10′ 8″	9′ 0″	11′ 6″	10′ 0″	8′ 6″	10′ 5″	9′ 1″	7′ 8″
350S137-97	50	12	30′ 11″	24′ 6″	21′ 5″	19′ 2″	16′ 9″	14′ 1″	17′ 5″	15′ 2″	12′ 10″	16′ 2″	14′ 1″	11′ 11″	15′ 2″	13′ 3″	11′ 2″	13′ 9″	12′ 0″	10′ 2″
350S137-97	50	16	28′ 1″	22′ 3″	19′ 5″	17′ 5″	15′ 2″	12′ 10″	15′ 9″	13′ 9″	11′ 7″	14′ 8″	12′ 10″	10′ 9″	13′ 9″	12′ 0″	10′ 2″	12′ 6″	10′ 11″	9′ 3″
350S137-97	50	24	24′ 6″	19′ 5″	17′ 0″	15′ 2″	13′ 3″	11′ 2″	13′ 9″	12′ 0″	10′ 2″	12′ 10″	11′ 2″	9′ 5″	12′ 0″	10′ 6″	8′ 10″	10′ 11″	9′ 7″	8′ 1″
350S162-97	50	12	32′ 7″	25′ 10″	22′ 7″	20′ 2″	17′ 7″	14′ 10″	18′ 4″	16′ 0″	13′ 6″	17′ 0″	14′ 10″	12′ 6″	16′ 0″	14′ 0″	11′ 9″	14′ 6″	12′ 8″	10′ 8″
350S162-97	50	16	29′ 7″	23′ 6″	20′ 6″	18′ 4″	16′ 0″	13′ 6″	16′ 8″	14′ 6″	12′ 3″	15′ 5″	13′ 6″	11′ 4″	14′ 6″	12′ 8″	10′ 8″	13′ 2″	11′ 6″	9′ 9″
350S162-97	50	24	25′ 10″	20′ 6″	17′ 11″	6′ 0″	14′ 0″	11′ 9″	14′ 6″	12′ 8″	10′ 8″	13′ 6″	11′ 9″	9′ 11″	12′ 8″	11′ 1″	9′ 4″	11′ 6″	10′ 1″	8′ 6″

Allowable Heights For Curtain Walls

	Spacing		5 psf			15 psf			20 psf			25 psf			30 psf			40 psf		
Section	Fy (ksi)	(in) oc	L/120	L/240	L/360	L/240	L/360	L/600	L/240	L/360	L/600	L/240	L/360	L/600	L/240	L/360	L/600	L/240	L/360	L/600
362S137-33	33	12	23′ 2″	18′ 5″	16′ 1″	14′ 3″	12′ 7″	10′ 7″	12′ 4″	11′ 5″	9′ 7″	11′ 0″	10′ 7″	8′ 11″	10′ 1″	9′ 11″	8′ 5″	8′ 8″ e	8′ 8″ e	7′ 7″
362S137-33	33	16	21′ 1″	16′ 9″	14′ 7″	12′ 4″	11′ 5″	9′ 7″	10′ 8″	10′ 4″	8′ 9″	9′ 6″	9′ 6″	8′ 1″	8′ 8″ e	8′ 8″ e	7′ 7″	7′ 6″ e	7′ 6″ e	6′ 11″ e
362S137-33	33	24	17′ 5″	14′ 7″	12′ 9″	10′ 1″	9′ 11″	8′ 5″	8′ 8″ e	8′ 8″ e	7′ 7″	7′ 9″ e	7′ 9″ e	7′ 1″ e	7′ 1″ e	7′ 1″ e	6′ 8″ e	6′ 2″ e	6′ 2″ e	6′ 0″ e
362S162-33	33	12	24′ 4″	19′ 3″	16′ 10″	15′ 1″	13′ 2″	11′ 1″	13′ 3″	11′ 11″	10′ 1″	11′ 10″	11′ 1″	9′ 4″	10′ 10″	10′ 5″	8′ 9″	9′ 4″ e	9′ 4″ e	8′ 0″
362S162-33	33	16	22′ 1″	17′ 6″	15′ 4″	13′ 3″	11′ 11″	10′ 1″	11′ 6″	10′ 10″	9′ 2″	10′ 3″ e	10′ 1″ e	8′ 6″	9′ 4″ e	9′ 4″ e	8′ 0″	8′ 1″ e	8′ 1″ e	7′ 3″ e
362S162-33	33	24	18′ 9″	15′ 4″	13′ 4″	10′ 10″	10′ 5″	8′ 9″	9′ 4″ e	9′ 4″ e	8′ 0″	8′ 4″ e	8′ 4″ e	7′ 5″ e	7′ 8″ e	7′ 8″ e	7′ 0″ e	6′ 7″ e	6′ 7″ e	6′ 4″ e
362S200-33	33	12	25′ 8″	20′ 4″	17′ 9″	15′ 11″	13′ 10″	11′ 8″	13′ 11″	12′ 7″	10′ 7″	12′ 5″	11′ 8″	9′ 10″	11′ 4″ e	11′ 0″ e	9′ 3″	9′ 10″ e	9′ 10″ e	8′ 5″
362S200-33	33	16	23′ 4″	18′ 6″	16′ 2″	13′ 11″	12′ 7″	10′ 7″	12′ 0″	11′ 5″	9′ 8″	10′ 9″ e	10′ 7″ e	8′ 11″	9′ 10″ e	9′ 10″ e	8′ 5″ e	8′ 6″ e	8′ 6″ e	7′ 8″ e
362S200-33	33	24	19′ 8″	16′ 2″	14′ 1″	11′ 4″ e	11′ 0″ e	9′ 3″	9′ 10″ e	9′ 10″ e	8′ 5″ e	8′ 9″ e	8′ 9″ e	7′ 10″ e	8′ 0″ e	8′ 0″ e	7′ 4″ e	6′ 11″ e	6′ 11″ e	6′ 8″ e
362S137-43	33	12	25′ 3″	20′ 0″	17′ 6″	15′ 8″	13′ 8″	11′ 6′	14′ 2″	12′ 5″	10′ 5″	12′ 11″	11′ 6″	9′ 8″	11′ 10″	10′ 10″	9′ 1″	10′ 3″	9′ 10″	8′ 3″
362S137-43	33	16	22′ 11″	18′ 2″	15′ 11″	14′ 2″	12′ 5″	10′ 5″	12′ 6″	11′ 3″	9′ 6″	11′ 2″	10′ 5″	8′ 10″	10′ 3″	9′ 10″	8′ 3″	8′ 10″	8′ 10″	7′ 6″
362S137-43	33	24	20′ 0″	15′ 11″	13′ 10″	11′ 10″	10′ 10″	9′ 1″	10′ 3″	9′ 10″	8′ 3″	9′ 2″	9′ 1″	7′ 8″	8′ 4″	8′ 4″	7′ 3″	7′ 3″ e	7′ 3″ e	6′ 7″
362S162-43	33	12	26′ 6″	21′ 0″	18′ 4″	16′ 5″	14′ 4″	12′ 1″	14′ 11″	13′ 0″	10′ 11″	13′ 10″	12′ 1″	10′ 2″	12′ 9″	11′ 4″	9′ 7″	11′ 0″	10′ 4″	8′ 8″
362S162-43	33	16	24′ 0″	19′ 1″	16′ 8″	14′ 11″	13′ 0″	10′ 11″	13′ 6″	11′ 10″	9′ 11″	12′ 1″	10′ 11″	9′ 3″	11′ 0″	10′ 4″	8′ 8″	9′ 6″	9′ 4″	7′ 11″
362S162-43	33	24	21′ 0″	16′ 8″	14′ 7″	12′ 9″	11′ 4″	9′ 7″	11′ 0″	10′ 4″	8′ 8″	9′ 10″	9′ 7″	8′ 1″	9′ 0″	9′ 0″	7′ 7″	7′ 9″ e	7′ 9″ e	6′ 11″ e
362S200-43	33	12	27′ 11″	22′ 2″	19′ 4″	17′ 4″	15′ 1″	12′ 9″	15′ 9″	13′ 9″	11′ 7″	14′ 7″	12′ 9″	10′ 9″	13′ 8″	12′ 0″	10′ 1″	11′ 10″	10′ 11″	9′ 2″
362S200-43	33	16	25′ 5″	20′ 2″	17′ 7″	15′ 9″	13′ 9″	11′ 7″	14′ 3″	12′ 6″	10′ 6″	12′ 11″	11′ 7″	9′ 9″	11′ 10″	10′ 11″	9′ 2″	10′ 3″	9′ 11″	8′ 4″
362S200-43	33	24	22′ 2″	17′ 7″	15′ 4″	13′ 8″	12′ 0″	10′ 1″	11′ 10″	10′ 11″	9′ 2″	10′ 7″	10′ 1″	8′ 6″	9′ 8″ e	9′ 6″ e	8′ 0″	8′ 4″ e	8′ 4″ e	7′ 3″ e
362S137-54	50	12	27′ 0″	21′ 5″	18′ 9″	16′ 9″	14′ 7″	12′ 4″	15′ 2″	13′ 3″	11′ 2″	14′ 1″	12′ 4″	10′ 5″	13′ 3″	11′ 7′	9′ 9″	12′ 1″	10′ 6″	8′ 10″
362S137-54	50	16	24′ 7″	19′ 6″	17′ 0″	15′ 2″	13′ 3″	11′ 2″	13′ 10″	12′ 1″	10′ 2″	12′ 10″	11′ 2″	9′ 5″	12′ 1″	10′ 6″	8′ 10″	10′ 11″	9′ 7″	8′ 1″
362S137-54	50	24	21′ 5″	17′ 0″	14′ 10″	13′ 3″	11′ 7″	9′ 9″	12′ 1″	10′ 6″	8′ 10″	11′ 2″	9′ 9″	8′ 3″	10′ 6″	9′ 2″	7′ 9″	9′ 7″	8′ 4″	7′ 0″
362S162-54	50	12	28′ 4″	22′ 6″	19′ 8″	17′ 7″	15′ 4″	12′ 11″	15′ 11″	13′ 11″	11′ 9″	14′ 10″	12′ 11″	10′ 11″	13′ 11″	12′ 2″	10′ 3″	12′ 8″	11′ 1″	9′ 4″
362S162-54	50	16	25′ 9″	20′ 5″	17′ 10″	15′ 11″	13′ 11″	11′ 9″	14′ 6″	12′ 8″	10′ 8″	16′ 5″	11′ 9″	9′ 11″	12′ 8″	11′ 1″	9′ 4″	11′ 6″	10′ 0″	8′ 5″
362S162-54	50	24	22′ 6″	17′ 10″	15′ 7″	13′ 11″	12′ 2″	10′ 3″	12′ 8″	11′ 1″	9′ 4″	11′ 9″	10′ 3″	8′ 8″	11′ 1″	9′ 8″	8′ 2″	10′ 0″	8′ 9″	7′ 5″
362S200-54	50	12	30′ 0″	23′ 9″	20′ 9″	18′ 7″	16′ 2″	13′ 8″	16′ 10″	14′ 9″	12′ 5″	15′ 8″	13′ 8″	11′ 6″	14′ 9″	12′ 10″	10′ 10″	13′ 4″	11′ 8″	9′ 10″
362S200-54	50	16	27′ 3″	21′ 7″	18′ 10″	16′ 10″	14′ 9″	12′ 5″	15′ 4″	13′ 4″	11′ 3″	14′ 3″	12′ 5″	10′ 5″	13′ 4″	11′ 8′	9′ 10″	12′ 2″	10′ 7″	8′ 11″
362S200-54	50	24	23′ 9″	18′ 10″	16′ 6″	14′ 9″	12′ 10″	10′ 10″	13′ 4″	11′ 8″	9′ 10″	12′ 5″	10′ 10″	9′ 2″	11′ 8″	10′ 2″	8′ 7″	10′ 7″	9′ 3″	7′ 10″
362S137-68	50	12	28′ 11″	22′ 11″	20′ 0″	17′ 11″	15′ 7″	13′ 2″	16′ 3″	14′ 2″	11′ 11″	15′ 1″	13′ 2″	11′ 1″	14′ 2″	12′ 5″	10′ 5″	12′ 11″	11′ 3″	9′ 6″
362S137-68	50	16	26′ 3″	20′ 10″	18′ 2″	16′ 3″	14′ 2″	11′ 11″	14′ 9″	12′ 11″	10′ 10″	13′ 8″	11′ 11″	10′ 1″	12′ 11″	11′ 3″	9′ 6″	11′ 8″	10′ 3″	8′ 7″
362S137-68	50	24	22′ 11″	18′ 2″	15′ 10″	14′ 2″	12′ 5″	10′ 5″	12′ 11″	11′ 3″	9′ 6″	11′ 11″	10′ 5″	8′ 10″	11′ 3″	9′ 10″	8′ 3″	10′ 3″	8′ 11″	7′ 6″
362S162-68	50	12	30′ 4″	24′ 1″	21′ 0″	18′ 9″	16′ 5″	13′ 10″	17′ 1″	14′ 11″	12′ 7″	15′ 10″	13′ 10″	11′ 8″	14′ 11″	13′ 0″	11′ 0″	13′ 6″	11′ 10″	10′ 0″
362S162-68	50	16	27′ 7″	21′ 10″	19′ 1″	17′ 1″	14′ 11″	12′ 7″	15′ 6″	13′ 6″	11′ 5″	14′ 5″	12′ 7″	10′ 7″	13′ 6″	11′ 10″	10′ 0″	12′ 4″	10′ 9″	9′ 1″
362S162-68	50	24	24′ 1″	19′ 1″	16′ 8″	14′ 11″	13′ 0″	11′ 0″	13′ 6″	11′ 10″	10′ 0″	12′ 7″	11′ 0″	9′ 3″	11′ 10″	10′ 4″	8′ 8″	10′ 9″	9′ 4″	7′ 11″
362S200-68	50	12	32′ 1″	25′ 6″	22′ 3″	19′ 10″	17′ 4″	14′ 8″	18′ 1″	15′ 9″	13′ 3″	16′ 9″	14′ 8″	12′ 4″	15′ 9″	13′ 9″	11′ 7″	14′ 4″	12′ 6″	10′ 6″
362S200-68	50	16	29′ 2″	23′ 2″	20′ 2″	18′ 1″	15′ 9″	13′ 3″	16′ 5″	14′ 4″	12′ 1″	15′ 3″	13′ 3″	11′ 2″	14′ 4″	12′ 6″	10′ 6″	13′ 0″	11′ 4″	9′ 7″
362S200-68	50	24	25′ 6″	20′ 2″	17′ 8″	15′ 9″	13′ 9″	11′ 7″	14′ 4″	12′ 6″	10′ 6″	13′ 3″	11′ 7″	9′ 9″	12′ 6″	10′ 11″	9′ 2″	11′ 4″	9′ 11″	8′ 4″
362S137-97	50	12	31′ 9″	25′ 3″	22′ 0″	19′ 8″	17′ 2″	14′ 6″	17′ 11″	15′ 7″	13′ 2″	16′ 7″	14′ 6″	12′ 3″	15′ 7″	13′ 8″	11′ 6″	14′ 2″	12′ 5″	10′ 5″
362S137-97	50	16	28′ 10″	22′ 11″	20′ 0″	17′ 11″	15′ 7″	13′ 2″	16′ 3″	14′ 2″	11′ 11″	15′ 1″	13′ 2″	11′ 1″	14′ 2″	12′ 5″	10′ 5″	12′ 11″	11′ 3″	9′ 6″
362S137-97	50	24	25′ 3″	20′ 0″	17′ 6″	15′ 7″	13′ 8″	11′ 6″	14′ 2″	12′ 5″	10′ 5″	13′ 2″	11′ 6″	9′ 8″	12′ 5″	10′ 10″	9′ 1″	11′ 3″	9′ 10″	8′ 3″
362S162-97	50	12	33′ 6″	26′ 7″	23′ 2″	20′ 9″	18′ 1″	15′ 3″	18′ 10″	16′ 5″	13′ 10″	17′ 6″	15′ 3″	12′ 10″	16′ 5″	14′ 4″	12′ 1″	14′ 11″	13′ 0″	11′ 0″
362S162-97	50	16	30′ 5″	24′ 1″	21′ 1″	18′ 10″	16′ 5″	13′ 10″	17′ 1″	14′ 11″	12′ 7″	15′ 10″	13′ 10″	11′ 8″	14′ 11″	13′ 0″	11′ 0″	13′ 7″	11′ 10″	10′ 0″
362S162-97	50	24	26′ 7″	21′ 1″	18′ 5″	16′ 5″	14′ 4″	12′ 1″	14′ 11″	13′ 0″	11′ 0″	13′ 10″	12′ 1″	10′ 2″	13′ 0″	11′ 5″	9′ 7″	11′ 10″	10′ 4″	8′ 9″
362S200-97	50	12	35′ 6″	28′ 2″	24′ 7″	22′ 0″	19′ 2″	16′ 2″	20′ 0″	17′ 5″	14′ 8″	18′ 6″	16′ 2″	13′ 8″	17′ 5″	15′ 3″	12′ 10″	15′ 10″	13′ 10″	11′ 8″
362S200-97	50	16	32′ 3″	25′ 7″	22′ 4″	20′ 0″	17′ 5″	14′ 8″	18′ 2″	15′ 10″	13′ 4″	16′ 10″	14′ 8″	12′ 5″	15′ 10″	13′ 10″	11′ 8″	14′ 5″	12′ 7″	10′ 7″
362S200-97	50	24	28′ 2″	22′ 4″	19′ 6″	17′ 5″	15′ 3″	12′ 10″	15′ 10″	13′ 10″	11′ 8″	14′ 8″	12′ 10″	10′ 10″	13′ 10″	12′ 1″	10′ 2″	12′ 7″	11′ 0″	9′ 3″

Allowable Heights For Curtain Walls

	Spacing		5 psf			15 psf			20 psf			25 psf			30 psf			40 psf		
Section	Fy (ksi)	(in) oc	L/120	L/240	L/360	L/240	L/360	L/600	L/240	L/360	L/600	L/240	L/360	L/600	L/240	L/360	L/600	L/240	L/360	L/600
400S137-33	33	12	25′ 1″	19′ 11″	17′ 4″	15′ 0″	13′ 7″	11′ 5″	13′ 0″	12′ 4″	10′ 4″	11′ 8″	11′ 5″	9′ 8″	10′ 7″	10′ 7″	9′ 1″	9′ 2″ e	9′ 2″ e	8′ 3″ e
400S137-33	33	16	22′ 7″	18′ 1″	15′ 9″	13′ 0″	12′ 4″	10′ 4″	11′ 3″	11′ 2″	9′ 5″	10′ 1″ e	10′ 1″ e	8′ 9″	9′ 2″ e	9′ 2″ e	8′ 3″ e	7′ 11″ e	7′ 11″ e	7′ 6″ e
400S137-33	33	24	18′ 5″	15′ 9″	13′ 9″	10′ 7″	10′ 7″	9′ 1″	9′ 2″ e	9′ 2″ e	8′ 3″ e	8′ 3″ e	8′ 3″ e	7′ 8″ e	7′ 6″ e	7′ 6″ e	7′ 2″ e	6′ 6″ e	6′ 6″ e	6′ 6″ e
400S162-33	33	12	26′ 3″	20′ 10″	18′ 2″	16′ 2″	14′ 2″	12′ 0″	14′ 0″	12′ 11″	10′ 10″	12′ 6″	12′ 0″	10′ 1″	11′ 5″ e	11′ 3″ e	9′ 6″	9′ 11″ e	9′ 11″ e	8′ 7″ e
400S162-33	33	16	23′ 10″	18′ 11″	16′ 6″	14′ 0″	12′ 11″	10′ 10″	12′ 1″	11′ 8″	9′ 10″	10′ 10″ e	10′ 10″ e	9′ 2″	9′ 11″ e	9′ 11″ e	8′ 7″ e	8′ 7″ e	8′ 7″ e	7′ 10″ e
400S162-33	33	24	19′ 10″	16′ 6″	14′ 5″	11′ 5″ e	11′ 3″ e	9′ 6″	9′ 11″ e	9′ 11″ e	8′ 7″ e	8′ 10″ e	8′ 10″ e	8′ 0″ e	8′ 1″ e	8′ 1″ e	7′ 6″ e	7′ 0″ e	7′ 0″ e	6′ 10″ e
400S200-33	33	12	27′ 8″	21′ 11″	19′ 2″	16′ 11″	15′ 0″	12′ 7″	14′ 8″	13′ 7″	11′ 5″	13′ 1″ e	12′ 7″	10′ 8″	12′ 0″ e	11′ 10″ e	10′ 0″	10′ 4″ e	10′ 4″ e	9′ 1″ e
400S200-33	33	16	25′ 2″	19′ 11″	17′ 5″	14′ 8″	13′ 7″	11′ 5″	12′ 8″ e	12′ 4″ e	10′ 5″	11′ 4″ e	11′ 4″ e	9′ 8″	10′ 4″ e	10′ 4″ e	9′ 1″ e	9′ 0″ e	9′ 0″ e	8′ 3″ e
400S200-33	33	24	20′ 9″	17′ 5″	15′ 3″	12′0″e	11′10″e	10′ 0″	10′ 4″ e	10′ 4″ e	9′ 1″ e	9′ 3″ e	9′ 3″ e	8′ 5″ e	8′ 5″ e	8′ 5″ e	7′ 11″ e	7′ 4″ e	7′ 4″ e	7′ 2″ e
400S137-43	33	12	27′ 3″	21′ 8″	18′ 11″	16′ 11″	14′ 9″	12′ 5″	15′ 4″	13′ 5″	11′ 3″	13′ 9″	12′ 5″	10′ 6″	12′ 6″	11′ 8″	9′ 10″	10′ 10″	10′ 7″	8′ 11″
400S137-43	33	16	24′ 9″	19′ 8″	17′ 2″	15′ 4″	13′ 5″	11′ 3″	13′ 3″	12′ 2″	10′ 3″	11′ 10″	11′ 3″	9′ 6″	10′ 10″	10′ 7″	8′ 11″	9′ 4″	9′ 4″	8′ 2″
400S137-43	33	24	21′ 8″	17′ 2″	15′ 0″	12′ 6″	11′ 8″	9′ 10″	10′ 10″	10′ 7″	8′ 11″	9′ 8″	9′ 8″	8′ 4″	8′ 10″	8′ 10″	7′ 10″	7′ 8″ e	7′ 8″ e	7′ 1″e
400S162-43	33	12	28′ 7″	22′ 8″	19′ 9″	17′ 8″	15′ 5″	13′ 0″	16′ 1″	14′ 0″	11′ 10″	14′ 9″	13′0″	11′ 0″	13′ 6″	12′ 3″	10′ 4″	11′ 8″	11′ 1″	9′ 5″
400S162-43	33	16	25′ 11″	20′ 7″	18′ 0″	16′ 1″	14′ 0″	11′ 10″	14′ 4″	12′ 9″	10′ 9″	12′ 9″	11′ 10″	10′ 0″	11′ 8″	11′ 1″	9′ 5″	10′ 1″	10′ 1″	8′ 6″
400S162-43	33	24	22′ 8″	18′ 0″	15′ 8″	13′ 6″	12′ 3″	10′ 4″	11′ 8″	11′ 1″	9′ 5″	10′ 5″	10′ 4″	8′ 8″	9′ 6″ e	9′ 6″ e	8′ 2″	8′ 3″ e	8′ 3″ e	7′ 5″ e
400S200-43	33	12	30′ 2″	23′ 11″	20′ 11″	18′ 8″	16′ 4″	13′ 9″	16′ 11″	14′ 10″	12′ 6″	15′ 9″	13′ 9″	11′ 7″	14′ 5″	12′ 11″	10′ 11″	12′ 6″	11′ 9″	9′ 11″
400S200-43	33	16	27′ 4″	21′ 9″	19′ 0″	16′ 11″	14′ 10″	12′ 6″	15′ 4″	13′ 5″	11′ 4″	13′ 8″	12′ 6″	10′ 6″	12′ 6″	11′ 9″	9′ 11″	10′ 10″ e	10′ 8″ e	9′ 0″
400S200-43	33	24	23′ 11″	19′ 0″	16′ 7″	14′ 5″	12′ 11″	10′ 11″	12′ 6″	11′ 9″	9′ 11″	11′ 2″ e	10′ 11″	9′ 2″	10′ 2″ e	10′ 2″ e	8′ 8″	8′ 10″ e	8′ 10″ e	7′ 10″ e
400S137-54	50	12	29′ 2″	23′ 2″	20′ 3″	18′ 1″	15′ 9″	13′ 4″	16′ 5″	14′ 4″	12′ 1″	15′ 3″	13′ 4″	11′ 3″	14′ 4″	12′ 6″	10′ 7″	13′ 0″	11′ 4″	9′ 7″
400S137-54	50	16	26′ 6″	21′ 1″	18′ 5″	16′ 5″	14′ 4″	12′ 1″	14′ 11″	13′ 0″	11′ 0″	13′ 10″	12′ 1″	12′ 2″	13′ 0″	11′ 4″	9′ 7″	11′ 10″	10′ 4″	8′ 8″
400S137-54	50	24	23′ 2″	18′ 5″	16′ 1″	14′ 4″	12′ 6″	10′ 7″	13′ 0″	11′ 4″	9′ 7″	12′ 1″	10′ 7″	8′ 11″	11′ 4″	9′ 11″	8′ 4″	10′ 4″	9′ 0″	7′ 7″
400S162-54	50	12	30′ 7″	24′ 3″	21′ 2″	18′ 11″	16′ 7″	13′ 11″	17′ 3″	15′ 0″	12′ 8″	16′ 0″	13′ 11″	11′ 9″	15′ 0′	13′ 2″	11′ 1″	13′ 8″	11′ 11″	10′ 1″
400S162-54	50	16	27′ 10″	22′ 1″	19′ 3″	17′ 3″	15′ 0″	12′ 8″	15′ 8″	13′ 8″	11′ 6″	14′ 6″	12′ 8″	10′ 8″	13′ 8″	11′ 11″	10′ 1″	12′ 5″	10′ 10″	9′ 2″
400S162-54	50	24	24′ 3″	19′ 3″	16′ 10″	15′ 0″	13′ 2″	11′ 1″	13′ 8″	11′ 11″	10′ 1″	12′ 8″	11′ 1″	9′ 4″	11′ 11″	10′ 5″	8′ 9″	10′ 10″	9′ 5″	8′ 0″
400S200-54	50	12	32′ 4″	25′ 8″	22′ 5″	20′ 0″	17′ 6″	14′ 9″	18′ 2″	15′ 11″	13′ 5″	16′ 10″	14′ 9″	12′ 5″	15′ 11″	13′ 10″	11′ 8″	14′ 5″	12′ 7″	10′ 7″
400S200-54	50	16	29′ 4″	23′ 4″	20′ 4″	18′ 2″	15′ 11″	13′ 5″	16′ 6″	14′ 5″	12′ 2″	15′ 4″	13′ 5″	11′ 3″	14′ 5″	12′ 7″	10′ 7″	13′ 1″	11′ 5″	9′ 8″
400S200-54	50	24	25′ 8″	20′ 4″	17′ 9″	15′ 11″	13′ 10″	11′ 8″	14′ 5″	12′ 7″	10′ 7″	13′ 5″	11′ 8″	9′ 10″	12′ 7″	11′ 0″	9′ 3″	11′ 5″	10′ 0″	8′ 5″
400S137-68	50	12	31′ 3″	24′ 9″	21′ 8″	19′ 4″	16′ 11″	14′ 3″	17′ 7″	15′ 4″	12′ 11″	16′ 4″	14′ 3″	12′ 0″	15′ 4″	13′ 5″	11′ 3″	13′ 11″	12′ 2″	10′ 3″
400S137-68	50	16	28′ 4″	22′ 6″	19′ 8″	17′ 7″	15′ 4″	12′ 11″	15′ 11″	13′ 11″	11′ 9″	14′ 10″	12′ 11″	10′ 11″	13′ 11″	12′ 2″	10′ 3″	12′ 8″	11′ 1″	9′ 4″
400S137-68	50	24	24′ 9″	19′ 8″	17′ 2″	15′ 4″	13′ 5″	11′ 3″	13′ 11″	12′ 2″	10′ 3″	12′ 11″	11′ 3″	9′ 6″	12′ 2″	10′ 7″	8′ 11″	11′ 1″	9′ 8″	8′ 2″
400S162-68	50	12	32′ 9″	26′ 0″	22′ 8″	20′ 3″	17′ 9″	14′ 11″	18′ 5″	16′ 1″	13′ 7″	17′ 1″	14′ 11″	12′ 7″	16′ 1″	14′ 1″	11′ 10″	14′ 7″	12′ 9″	10′ 9″
400S162-68	50	16	29′ 9″	23′ 7″	20′ 7″	18′ 5″	16′ 1″	13′ 7″	16′ 9″	14′ 7″	12′ 4″	15′ 6″	13′ 7″	11′ 5″	14′ 7″	12′ 9″	10′ 9″	13′ 3″	11′ 7″	9′ 9″
400S162-68	50	24	26′ 0″	20′ 7″	18′ 0″	16′ 1″	14′ 1″	11′ 10″	14′ 7″	12′ 9″	10′ 9″	13′ 7″	11′ 10″	10′ 0″	12′ 9″	11′ 2″	9′ 5″	11′ 7″	10′ 1″	8′ 6″
400S200-68	50	12	34′ 8″	27′ 6″	24′ 0″	21′ 5″	18′ 9″	15′ 9″	19′ 6″	17′ 0″	14′ 4″	18′ 1″	15′ 9″	13′ 4″	17′ 0″	14′ 10″	12′ 6″	15′ 5″	13′ 6″	11′ 5″
400S200-68	50	16	31′ 5″	25′ 0″	21′ 10″	19′ 6″	17′ 0″	14′ 4″	17′ 8″	15′ 5″	13′ 0″	16′ 5″	14′ 4″	12′ 1″	15′ 5″	13′ 6″	11′ 5″	14′ 0″	12′ 3″	10′ 4″
400S200-68	50	24	27′ 6″	21′ 10″	19′ 0″	17 ′0″	14′ 10″	12′ 6″	15′ 5″	13′ 6″	11′ 5″	14′ 4″	12′ 6″	10′ 7″	13′ 6″	11′ 9″	9′ 11″	12′ 3″	10′ 8″	9′ 0″
400S137-97	50	12	34′ 5″	27′ 3″	23′ 10″	21′ 4″	18′ 7″	15′ 8″	19′ 4″	16′ 11″	14′ 3″	18′ 0″	15′ 8″	13′ 3″	16′ 11″	14′ 9″	12′ 5″	15′ 4″	13′ 5″	11′ 4″
400S137-97	50	16	31′ 3″	24′ 9″	21′ 8″	19′ 4″	16′ 11″	14′ 3″	17′ 7″	15′ 4″	12′ 11″	16′ 4″	14′ 3″	12′ 0″	15′ 4″	13′ 5″	11′ 4″	13′ 11″	12′ 2″	10′ 3″
400S137-97	50	24	27′ 3″	21′ 8″	18′ 11″	16′ 11″	14′ 9″	12′ 5″	15′ 4″	13′ 5″	11′ 4″	14′ 3″	12′ 5″	10′ 6″	13′ 5″	11′ 8″	9′ 10″	12′ 2″	10′ 8″	9′ 0″
400S162-97	50	12	36′ 2″	28′ 9″	25′ 1″	22′ 5″	19′ 7″	16′ 6″	20′ 4″	17′ 9″	15′ 0″	18′ 11″	16′ 6″	13′ 11″	17′ 9″	15′ 6″	13′ 1″	16′ 2″	14′ 1″	11′ 11″
400S162-97	50	16	32′ 10″	26′ 1″	22′ 9″	20′ 4″	17′ 9″	15′ 0″	18′ 6″	16′ 2″	13′ 7″	17′ 2″	15′ 0″	12′ 8″	16′ 2″	14′ 1″	11′ 11″	14′ 8″	12′ 10″	10′ 10″
400S162-97	50	24	28′ 9″	22′ 9″	19′ 11″	17′ 9″	15′ 6″	13′ 1″	16′ 2″	14′ 1″	11′ 11″	15′ 0″	13′ 1″	11′ 0″	14′ 1″	12′ 4″	10′ 5″	12′ 10″	11′ 2″	9′ 5″
400S200-97	50	12	38′ 4″	30′ 5″	26′ 7″	23′ 9″	20′ 9″	17′ 6″	21′ 7″	18′ 10″	15′ 11″	20′ 0″	17′ 6″	14′ 9″	18′ 10″	16′ 6″	13′ 10″	17′ 1″	14′ 11″	12′ 7″
400S200-97	50	16	34′ 10″	27′ 8″	24′ 2″	21′ 7″	18′ 10′	15′ 11″	19′ 7″	17′ 1″	14′ 5″	18′ 2″	15′ 11″	13′ 5″	17′ 1″	14′ 11″	12′ 7″	15′ 6″	13′ 7″	11′ 5″
400S200-97	50	24	30′ 5″	24′ 2″	21′ 1″	18′ 10″	16′ 5′	13′ 10″	17′ 1″	14′ 11″	12′ 7″	15′ 11″	13′ 10″	11′ 8″	14′ 11″	13′ 1″	11′ 0″	13′ 7″	11′ 10″	10′ 0″

Allowable Heights For Curtain Walls

	Spacing		5 psf			15 psf			20 psf			25 psf			30 psf			40 psf		
Section	Fy (ksi)	(in) oc	L/120	L/240	L/360	L/240	L/360	L/600	L/240	L/360	L/600	L/240	L/360	L/600	L/240	L/360	L/600	L/240	L/360	L/600
550S137-33	33	12	31′ 7″	25′ 7″	22′ 4″	18′ 2″	17′ 5″	14′ 8″	15′ 9″ e	15′ 9″ e	13′ 4″	14′ 1″ e	14′ 1″ e	12′ 5″ e	12′ 10″ e	12′ 10″ e	11′ 8″ e	11′ 2″ e	11′ 2″ e	10′ 7″ e
550S137-33	33	16	27′ 4″	23′ 3″	20′ 4″	15′ 9″ e	15′ 9″ e	13′ 4″	13′ 8″ e	13′ 8″ e	12′ 2″ e	12′ 2″ e	12′ 2″ e	11′ 3″ e	11′ 2″ e	11′ 2″ e	10′ 7″ e	9′ 8″ e	9′ 8″ e	9′ 7″ e
550S137-33	33	24	22′ 4″	20′ 4″	17′ 9″	12′ 10″ e	12′ 10″ e	11′ 8″ e	11′ 2″ e	11′ 2″ e	10′ 7″ e	9′ 11″ e	9′ 11″ e	9′ 10″ e	9′ 1″ e	9′ 1″ e	9′ 1″ e	7′ 10″ e	7′ 10″ e	7′ 10″ e
550S162-33	33	12	33′ 8″	26′ 8″	23′ 4″	19′ 6″	18′ 2″	15′ 4″	16′ 11″ e	16′ 11″ e	13′ 11″	15′ 2″ e	15′ 2″ e	12′ 11″ e	13′ 10″ e	13′ 10″ e	12′ 2″ e	11′ 11″ e	11′ 11″ e	11′ 1″ e
550S162-33	33	16	29′ 4″	24′ 3″	21′ 2″	16′ 11″ e	16′ 6″ e	13′ 11″	14′ 8″ e	14′ 8″ e	12′ 8″ e	13′ 1″ e	13′ 1″ e	11′ 9″ e	11′ 11″ e	11′ 11″ e	11′ 1″ e	10′ 4″ e	10′ 4″ e	10′ 4″ e
550S162-33	33	24	23′ 11″	21′ 2″	18′ 6″	13′ 10″ e	13′ 10″ e	12′ 2″ e	11′ 11″ e	11′ 11″ e	11′ 1″ e	10′ 8″ e	10′ 8″ e	10′ 3″ e	9′ 9″ e	9′ 9″ e	9′ 8″ e	8′ 5″ e	8′ 5″ e	8′ 5″ e
550S137-43	33	12	35′ 1″	27′ 10″	24′ 4″	21′ 9″	19′ 0″	16′ 0″	19′ 7″	17′ 3″	14′ 6″	17′ 7″	16′ 0″	13′ 6″	16′ 0″	15′ 1″	12′ 8″	13′ 10″ e	13′ 8″ e	11′ 6″
550S137-43	33	16	31′ 11″	25′ 4″	22′ 1″	19′ 7″	17′ 3″	14′ 6″	17′ 0″	15′ 8″	13′ 2″	15′ 2″	14′ 6″	12′ 3″	13′ 10″ e	13′ 8″ e	11′ 6″	12′ 0″ e	12′ 0″ e	10′ 6″ e
550S137-43	33	24	27′ 9″	22′ 1″	19′ 4″	16′ 0″	15′ 1″	12′ 8″	13′ 10″ e	13′ 8″ e	11′ 6″	12′ 5″ e	12′ 5″ e	12′ 8″ e	11′ 4″ e	11′ 4″ e	10′ 1″ e	9′ 9″ e	9′ 9″ e	9′ 2″ e
550S162-43	33	12	36′ 8″	29′ 1″	25′ 5″	22′ 8″	19′ 10″	16′ 9″	20′ 7″	18′ 0″	15′ 2″	18′ 8″	16′ 9″	14′ 1″	17′ 1″	15′ 9″	13′ 3″	14′ 9″ e	14′ 3″ e	12′ 0″
550S162-43	33	16	33′ 3″	26′ 5″	23′ 1″	20′ 7″	18′ 0″	15′ 2″	18′ 1″	16′ 4″	13′ 9″	16′ 2″ e	15′ 2″	12′ 10″	14′ 9″ e	14′ 3″ e	12′ 0″	12′ 9″ e	12′ 9″ e	10′ 11″ e
550S162-43	33	24	29′ 1″	23′ 1″	20′ 2″	17′ 1″	15′ 9″	13′ 3″	14′ 9″ e	14′ 3″ e	12′ 0″	13′ 2″ e	13′ 2″ e	11′ 2″ e	12′ 0″ e	12′ 0″ e	10′ 6″ e	10′ 5″ e	10′ 5″ e	9′ 7″ e
550S137-54	50	12	37′ 8″	29′ 10″	26′ 1″	23′ 4″	20′ 4″	17′ 2″	21′ 2″	18′ 6″	15′ 7″	19′ 8″	17′ 2″	14′ 6″	18′ 6″	16′ 2″	13′ 7″	16′ 10″	14′ 8″	12′ 4″
550S137-54	50	16	34′ 2″	27′ 1″	23′ 8″	21′ 2″	18′ 6″	15′ 7″	19′ 3″	16′ 10″	14′ 2″	17′ 10″	15′ 7″	13′ 2″	16′ 10″	14′ 8″	12′ 4″	15′ 3″	13′ 4″	11′ 3″
550S137-54	50	24	29′ 10″	23′ 8″	20′ 8″	18′ 6″	16′ 2″	13′ 7″	16′ 10″	14′ 8″	12′ 4″	15′ 7″	13′ 7″	11′ 6″	14′ 8″	12′ 10″	10′ 10″	13′ 2″	11′ 8″	9′ 10″
550S162-54	50	12	39′ 4″	31′ 3″	27′ 3″	24′ 4″	21′ 3″	17′ 11″	22′ 1″	19′ 4″	16′ 3″	20′ 6″	17′ 11″	15′ 1″	19′ 4″	16′ 10″	14′ 3″	17′ 7″	15′ 4″	12′ 11″
550S162-54	50	16	35′ 9″	28′ 4″	24′ 9″	22′ 1″	19′ 4″	16′ 3″	20′ 1″	17′ 7″	14′ 10″	18′ 8″	16′ 3″	13′ 9″	17′ 7″	15′ 4″	12′ 11″	15′ 11″	13′ 11″	11′ 9″
550S162-54	50	24	31′ 2″	24′ 9″	21′ 7″	19′ 4″	16′ 10″	14′ 3″	17′ 7″	15′ 4″	12′ 11″	16′ 3″	14′ 3″	12′ 0″	15′ 4″	13′ 5″	11′ 3″	13′ 11″	12′ 2″	10′ 3″
550S137-68	50	12	40′ 4″	32′ 0″	27′ 11″	25′ 0″	21′ 10″	18′ 5″	22′ 8″	19′ 10″	16′ 8″	21′ 1″	18′ 5″	15′ 6″	19′ 10″	17′ 4″	14′ 7″	18′ 0″	15′ 9″	13′ 3″
550S137-68	50	16	36′ 7″	29′ 1″	25′ 4″	22′ 8″	19′ 10″	16′ 8″	20′ 7″	18′ 0″	15′ 2″	19′ 1″	16′ 8″	14′ 1″	18′ 0″	15′ 9″	13′ 3″	16′ 4″	14′ 3″	12′ 0″
550S137-68	50	24	32′ 0″	25′ 4″	22′ 2″	19′ 10″	17′ 4″	14′ 7″	18′ 0″	15′ 9″	13′ 3″	16′ 8″	14′ 7″	12′ 3″	15′ 9″	13′ 9″	11′ 7″	14′ 3″	12′ 6″	10′ 6″
550S162-68	50	12	42′ 2″	33′ 5″	29′ 2″	26′ 1″	22′ 10″	19′ 3″	23′ 9″	20′ 8″	17′ 5″	22′ 0″	19′ 3″	16′ 2″	20′ 8″	18′ 1″	15′ 3″	18′ 10″	16′ 5″	13′ 10″
550S162-68	50	16	38′ 3″	30′ 4″	26′ 6″	23′ 9″	20′ 8″	17′ 5″	21′ 6″	18′ 10″	15′ 10″	20′ 0″	17′ 5″	14′ 9″	18′ 10″	16′ 5″	13′ 10″	17′ 1″	14′ 11″	12′ 7″
550S162-68	50	24	33′ 5″	26′ 6″	23′ 2″	20′ 8″	18′ 1″	15′ 3″	18′ 10″	16′ 5″	13′ 10″	17′ 5″	15′ 3″	12′ 10″	16′ 5″	14′ 4″	12′ 1″	14′ 11″	13′ 0″	11′ 0″
550S137-97	50	12	44′ 7″	35′ 4″	30′ 10″	27′ 7″	24′ 1″	20′ 4″	25′ 1″	21′ 11″	18′ 5″	23′ 3″	20′ 4″	17′ 2″	21′ 11″	19′ 1″	16′ 1″	19′ 11″	17′ 4″	14′ 8″
550S137-97	50	16	40′ 6″	32′ 1″	28′ 1″	25′ 1″	21′ 11″	18′ 6″	22′ 9″	19′ 11″	16′ 9″	21′ 2″	18′ 5″	15′ 7″	19′ 11″	17′ 4″	14′ 8″	18′ 1″	15′ 9″	13′ 4″
550S137-97	50	24	35′ 4″	28′ 1″	24′ 6″	21′ 11″	19′ 1″	16′ 1″	19′ 11″	17′ 4″	14′ 8″	18′ 5″	16′ 1″	13′ 7″	17′ 4″	15′ 2″	12′ 9″	15′ 9″	13′ 9″	11′ 7″
550S162-97	50	12	46′ 8″	37′ 0″	32′ 4″	28′ 11″	25′ 3″	21′ 3″	26′ 3″	22′ 11″	19′ 4″	24′ 5″	21′ 3″	17′ 11″	22′ 11″	20′ 0″	16′ 11″	20′ 10″	18′ 2″	15′ 4″
550S162-97	50	16	42′ 5″	33′ 8″	29′ 5″	26′ 4″	22′ 11″	19′ 4″	23′ 10″	20′ 10″	17′ 7″	22′ 2″	19′ 4″	16′ 4″	20′ 10″	18′ 2″	15′ 4″	18′ 11″	16′ 6″	13′ 11″
550S162-97	50	24	37′ 0″	29′ 5″	25′ 8″	22′ 11″	20′ 0″	16′ 11″	20′ 10″	18′ 2″	15′ 4″	19′ 4″	16′ 11″	14′ 3″	18′ 2″	15′ 11″	13′ 5″	16′ 6″	14′ 5″	12′ 2″
600S137-33	33	12	33′ 0″	27′ 3″	23′ 10″	19′ 0″	18′ 7″	15′ 8″	16′ 6″ e	16′ 6″ e	14′ 3″	14′ 9″ e	14′ 9″ e	13′ 3″ e	13′ 5″ e	13′ 5″ e	12′ 5″ e	11′ 8″ e	11′ 8″ e	11′ 4″ e
600S137-33	33	16	28′ 7″	24′ 9″	21′ 8″	16′ 6″ e	16′ 6″ e	14′ 3″	14′ 3″ e	14′ 3″ e	12′ 11″ e	12′ 9″ e	12′ 9″ e	12′ 0″ e	11′ 8″ e	11′ 8″ e	11′ 4″ e	10′ 1″ e	10′ 1″ e	10′ 1″ e
600S137-33	33	24	23′ 4″	21′ 8″	18′ 11″	13′ 5″ e	13′ 5″ e	12′ 5″ e	11′ 8″ e	11′ 8″ e	11′ 4″ e	10′ 5″ e	10′ 5″ e	10′ 5″ e	9′ 6″ e	9′ 6″ e	9′ 6″ e	8′ 3″ e	8′ 3″ e	8′ 3″ e
600S162-33	33	12	35′ 6″	28′ 7″	25′ 0″	20′ 6″ e	19′ 6″	16′ 5″	17′ 9″ e	17′ 9″ e	14′ 11″	15′ 10″ e	15′ 10″ e	13′ 10″ e	14′ 6″ e	14′ 6″ e	13′ 0″ e	12′ 6″ e	12′ 6″ e	11′ 10″ e
600S162-33	33	16	30′ 9″	26′ 0″	22′ 8″	17′ 9″ e	17′ 9″ e	14′ 11″	15′ 4″ e	15′ 4″ e	13′ 7″ e	13′ 9″ e	13′ 9″ e	12′ 7″ e	12′ 6″ e	12′ 6″ e	11′ 10″ e	10′ 10″ e	10′ 10″ e	10′ 9″ e
600S162-33	33	24	25′ 1″	22′ 8″	19′ 10″	14′ 6″ e	14′ 6″ e	13′ 0″ e	12′ 6″ e	12′ 6″ e	11′ 10″ e	11′ 2″ e	11′ 2″ e	11′ 0″ e	10′ 3″ e	10′ 3″ e	10′ 3″ e	8′ 10″ e	8′ 10″ e	8′ 10″ e
600S200-33	33	12	37′ 10″	30′ 0″	26′ 3″	21′ 10″ e	20′ 6″ e	17′ 3″	18′ 11″ e	18′ 7″ e	15′ 8″ e	16′ 11″ e	16′ 11″ e	14′ 7″ e	15′ 5″ e	15′ 5″ e	13′ 8″ e	13′ 4″ e	13′ 4″ e	12′ 5″ e
600S200-33	33	16	32′ 9″	27′ 3″	23′ 10″	18′ 11″ e	18′ 7″ e	15′ 8″ e	16′ 4″ e	16′ 4″ e	14′ 3″ e	14′ 8″ e	14′ 8″ e	13′ 3″ e	13′ 4″ e	13′ 4″ e	12′ 5″ e	11′ 7″ e	11′ 7″ e	11′ 4″ e
600S200-33	33	24	26′ 9″	23′ 10″	20′ 10″	15′ 5″ e	15′ 5″ e	13′ 8″ e	13′ 4″ e	13′ 4″ e	12′ 5″ e	11′ 11″ e	11′ 11″ e	11′ 7″ e	10′ 11″ e	10′ 11″ e	10′ 10″ e	9′ 5″ e	9′ 5″ e	9′ 5″ e
600S137-43	33	12	37′ 8″	29′ 10″	26′ 1″	22′ 11″	20′ 4″	17′ 2″	19′ 10″	18′ 6″	15′ 7″	17′ 9″	17′ 2″	14′ 6″	16′ 2″	16′ 2″	13′ 7″	14′ 0″ e	14′ 0″ e	12′ 4″
600S137-43	33	16	34′ 2″	27′ 2″	23′ 8″	19′ 10″	18′ 6″	15′ 7″	17′ 2″	16′ 10″	14′ 2″	15′ 4″ e	15′ 4″ e	13′ 2″	14′ 0″ e	14′ 0″ e	12′ 4″	12′ 1″ e	12′ 1″ e	11′ 3″ e
600S137-43	33	24	28′ 0″	23′ 8″	20′ 8″	16′ 2″	16′ 2″	13′ 7″	14′ 0″ e	14′ 0″ e	12′ 4″	12′ 6″ e	12′ 6″ e	11′ 6″ e	11′ 5″ e	11′ 5″ e	10′ 10″ e	9′ 11″ e	9′ 11″ e	9′ 10″ e
600S162-43	33	12	39′ 3″	31′ 2″	27′ 3″	24′ 4″	21′ 3″	17′ 11″	21′ 11″	19′ 4″	16′ 3″	19′ 7″	17′ 11″	15′ 1″	17′ 11″ e	16′ 10″	14′ 2″	15′ 6″ e	15′ 6″ e	12′ 11″
600S162-43	33	16	35′ 8″	28′ 4″	24′ 9″	21′ 11″	19′ 4″	16′ 3″	19′ 0″ e	17′ 6″	14′ 9″	17′ 0″ e	16′ 3″ e	13′ 9″	15′ 6″ e	15′ 4″ e	12′ 11″	13′ 5″ e	13′ 5″ e	11′ 9″ e
600S162-43	33	24	31′ 0″	24′ 9″	21′ 7″	17′ 11″ e	16′ 10″	14′ 2″	15′ 6″ e	15′ 4″ e	12′ 11″	13′ 10″ e	13′ 10″ e	12′ 0″ e	12′ 8″ e	12′ 8″ e	11′ 3″ e	10′ 11″ e	10′ 11″ e	10′ 3″ e
600S200-43	33	12	41′ 3″	32′ 9″	28′ 7″	25′ 7″	22′ 4″	18′ 10″	22′ 7″	20′ 3″	17′ 1″	20′ 3″ e	18′ 10″	15′ 10″	18′ 5″ e	17′ 8″ e	14′ 11″	16′ 0″ e	16′ 0″ e	13′ 7″ e
600S200-43	33	16	37′ 6″	29′ 9″	26′ 0″	22′ 7″	20′ 3″	17′ 1″	19′ 7″ e	18′ 5″	15′ 6″	17′ 6″ e	17′ 1″ e	14′ 5″	16′ 0″ e	16′ 0″ e	13′ 7″ e	13′ 10″ e	13′ 10″ e	12′ 4″ e
600S200-43	33	24	32′ 0″	26′ 0″	22′ 8″	18′ 5″ e	17′ 8″ e	14′ 11″	16′ 0″ e	16′ 0″ e	13′ 7″ e	14′ 3″ e	14′ 3″ e	12′ 7″ e	13′ 0″ e	13′ 0″ e	11′ 10″ e	11′ 3″ e	11′ 3″ e	10′ 9″ e
600S137-54	50	12	40′ 4″	32′ 0″	28′ 0″	25′ 0″	21′ 10″	18′ 5″	22′ 9″	19′ 10″	16′ 9″	21′ 1″	18′ 5″	15′ 6″	19′ 10″	17′ 4″	14′ 7″	18′ 0″	15′ 9″	13′ 3″
600S137-54	50	16	36′ 8″	29′ 1″	25′ 5″	22′ 9″	19′ 10″	16′ 9″	20′ 8″	18′ 0″	15′ 2″	19′ 2″	16′ 9″	14′ 1″	18′ 0″	15′ 9″	13′ 3″	16′ 3″	14′ 4″	12′ 1″
600S137-54	50	24	32′ 0″	25′ 5″	22′ 2″	19′ 10″	17′ 4″	14′ 7″	18′ 0″	15′ 9″	13′ 3″	16′ 9″	14′ 7″	12′ 4″	15′ 4″	13′ 9″	11′ 7″	13′ 3″	12′ 6″	10′ 6″
600S162-54	50	12	42′ 2″	33′ 5″	29′ 2″	26′ 1″	22′ 10″	19′ 3″	23′ 8″	20′ 8″	17′ 5″	22′ 0″	19′ 3″	16′ 2″	20′ 8″	18′ 1″	15′ 3″	18′ 10″	16′ 5″	13′ 10″
600S162-54	50	16	38′ 3″	30′ 4″	26′ 6″	23′ 8″	20′ 8″	17′ 5″	21′ 6″	18′ 10″	15′ 10″	20′ 0″	17′ 5″	14′ 9″	18′ 10″	16′ 5″	13′ 10″	17′ 1″	14′ 11″	12′ 7″
600S162-54	50	24	33′ 5″	26′ 6″	23′ 2″	20′ 8″	18′ 1″	15′ 3″	18′ 10″	16′ 5″	13′ 10″	17′ 5″	15′ 3″	12′ 10″	16′ 5″	14′ 4″	12′ 1″	14′ 8″	13′ 0″	11′ 0″
600S200-54	50	12	44′ 3″	35′ 2″	30′ 8″	27′ 5″	23′ 11″	20′ 2″	24′ 11″	21′ 9″	18′ 4″	23′ 2″	20′ 2″	17′ 0″	21′ 9″	19′ 0″	16′ 0″	19′ 9″	17′ 3″	14′ 7″
600S200-54	50	16	40′ 3″	31′ 11″	27′ 11″	24′ 11″	21′ 9″	18′ 4″	22′ 8″	19′ 9″	16′ 8″	21′ 0″	18′ 4″	15′ 6″	19′ 9″	17′ 3″	14′ 7″	17′ 11″	15′ 8″	13′ 3″
600S200-54	50	24	35′ 2″	27′ 11″	24′ 4″	21′ 9″	19′ 0″	16′ 0″	19′ 9″	17′ 3″	14′ 7″	18′ 4″	16′ 0″	13′ 6″	17′ 3″	15′ 1″	12′ 8″	15′ 1″ e	13′ 8″	11′ 7″
600S137-68	50	12	43′ 3″	34′ 4″	30′ 0″	26′ 9″	23′ 5″	19′ 9″	24′ 4″	21′ 3″	17′ 11″	22′ 7″	19′ 9″	16′ 8″	21′ 3″	18′ 7″	15′ 8″	19′ 4″	16′ 10″	14′ 3″
600S137-68	50	16	39′ 4″	31′ 2″	27′ 3″	24′ 4″	21′ 3″	17′ 11″	22′ 1″	19′ 4″	16′ 3″	20′ 6″	17′ 1″	15′ 1″	19′ 4″	16′ 10″	14′ 3″	17′ 6″	15′ 4″	12′ 11″
600S137-68	50	24	34′ 4″	27′ 3″	23′ 9″	21′ 3″	18′ 7″	15′ 8″	19′ 4″	16′ 10″	14′ 3″	17′ 11″	15′ 8″	13′ 2″	16′ 10″	14′ 9″	12′ 5″	15′ 4″	13′ 4″	11′ 3″
600S162-68	50	12	45′ 2″	35′ 10″	31′ 4″	28′ 0″	24′ 5″	20′ 7″	25′ 5″	22′ 2″	18′ 9″	23′ 7″	20′ 7″	17′ 4″	22′ 2″	19′ 5″	16′ 4″	20′ 2″	17′ 7″	14′ 10″
600S162-68	50	16	41′ 0″	32′ 7″	28′ 5″	25′ 5″	22′ 2″	18′ 9″	23′ 1″	20′ 2″	17′ 0″	21′ 5″	18′ 9″	15′ 9″	20′ 2″	17′ 7″	14′ 10″	18′ 4″	16′ 0″	13′ 6″
600S162-68	50	24	35′ 10″	28′ 5″	24′ 10″	22′ 2″	19′ 5″	16′ 4″	20′ 2″	17′ 7″	14′ 10″	18′ 9″	16′ 4″	13′ 9″	17′ 7″	15′ 5″	13′ 0″	16′ 0″	14′ 0″	11′ 9″
600S200-68	50	12	47′ 6″	37′ 8″	32′ 11″	29′ 5″	25′ 8″	21′ 8″	26′ 9″	23′ 4″	19′ 8″	24′ 10″	21′ 8″	18′ 3″	23′ 4″	20′ 5″	17′ 2″	21′ 3″	18′ 6″	15′ 7″
600S200-68	50	16	43′ 2″	34′ 3″	29′ 11″	26′ 9″	23′ 4″	19′ 8″	24′ 3″	21′ 3″	17′ 11″	22′ 7″	19′ 8″	16′ 7″	21′ 3″	18′ 6″	15′ 7″	19′ 3″	16′ 10″	14′ 2″
600S200-68	50	24	37′ 8″	29′ 11″	26′ 2″	23′ 4″	20′ 5″	17′ 2″	21′ 3″	18′ 6″	15′ 7″	19′ 8″	17′ 2″	14′ 6″	18′ 6″	16′ 2″	13′ 8″	16′ 10″	14′ 8″	12′ 5″
600S137-97	50	12	47′ 10″	38′ 0″	33′ 2″	29′ 8″	25′ 11″	21′ 10″	26′ 11″	23′ 6″	19′ 10″	25′ 0″	21′ 10″	18′ 5″	23′ 6″	20′ 6″	17′ 4″	21′ 4″	18′ 8″	15′ 9″
600S137-97	50	16	43′ 6″	34′ 6″	30′ 2″	26′ 11″	23′ 6″	19′ 10″	24′ 6″	21′ 4″	18′ 0″	22′ 8″	19′ 10″	16′ 9″	21′ 4″	18′ 8″	15′ 9″	19′ 5″	16′ 11″	14′ 3″
600S137-97	50	24	38′ 0″	30′ 2″	26′ 4″	23′ 6″	20′ 6″	17′ 4″	21′ 4″	18′ 8″	15′ 9″	19′ 10″	17′ 4″	14′ 7″	18′ 8″	16′ 4″	13′ 9″	16′ 11″	14′ 10″	12′ 6″
600S162-97	50	12	50′ 1″	39′ 9″	34′ 8″	31′ 0″	27′ 1″	22′ 10″	28′ 2″	24′ 7″	20′ 9″	26′ 2″	22′ 10″	19′ 3″	24′ 7″	21′ 6″	18′ 1″	22′ 4″	19′ 6″	16′ 6″
600S162-97	50	16	45′ 6″	36′ 1″	31′ 6″	28′ 2″	24′ 7″	20′ 9″	25′ 7″	22′ 4″	18′ 10″	23′ 9″	20′ 9″	17′ 6″	22′ 4″	19′ 6″	16′ 6″	20′ 4″	17′ 9″	14′ 11″
600S162-97	50	24	39′ 9″	31′ 6″	27′ 6″	24′ 7″	21′ 6″	18′ 1″	22′ 4″	19′ 6″	16′ 6″	20′ 9″	18′ 1″	15′ 3″	19′ 6″	17′ 1″	14′ 4″	17′ 9″	15′ 6″	13′ 1″
600S200-97	50	12	52′ 9″	41′ 10″	36′ 7″	32′ 8″	28′ 7″	24′ 1″	29′ 8″	25′ 11″	21′ 10″	27′ 7″	24′ 1″	20′ 4″	25′ 11″	22′ 8″	19′ 1″	23′ 7″	20′ 7″	17′ 4″
600S200-97	50	16	47′ 11″	38′ 0″	33′ 3″	29′ 8″	25′ 11″	21′ 10″	27′ 0″	23′ 7″	19′ 10″	25′ 0″	21′ 10″	18′ 5″	23′ 7″	20′ 7″	17′ 4″	21′ 5″	18′ 8″	15′ 9″
600S200-97	50	24	41′ 10″	33′ 3″	29′ 0″	25′ 11″	22′ 8″	19′ 1″	23′ 7″	20′ 7″	17′ 4″	21′ 10″	19′ 1″	16′ 1″	20′ 7″	18′ 0″	15′ 2″	18′ 8″	16′ 4″	13′ 9″

Allowable Heights For Curtain Walls

	Spacing		5 psf			15 psf			20 psf			25 psf			30 psf			40 psf		
Section	Fy (ksi)	(in) oc	L/120	L/240	L/360	L/240	L/360	L/600	L/240	L/360	L/600	L/240	L/360	L/600	L/240	L/360	L/600	L/240	L/360	L/600
800S137-33	33	12	37' 9"e	34' 1"e	29' 9"e	21' 9"e	21' 9"e	19' 7" e	18' 10"e	18' 10"e	17' 10"e	16' 10"e	16' 10"e	16' 6"e	15' 5"e	15' 5"e	15' 5"e	13' 4"e	13' 4"e	13' 4"e
800S137-33	33	16	32' 8"e	31' 0"e	27' 0" e	18' 10"e	18' 10"e	17' 10"e	16' 4"e	16' 4"e	16' 2" e	14' 7"e	14' 7"e	14' 7"e	13' 4"e	13' 4"e	13' 4"e	11' 6"e	11' 6"e	11' 6"e
800S137-33	33	24	26' 8"e	26' 8"e	23' 7" e	15' 5"e	15' 5"e	15' 5"e	13' 4"e	13' 4"e	13' 4"e	11'11"e	11' 11"e	11'11"e	10' 10"e	10' 10"e	10' 10"e	9' 5"e	9' 5"e	9' 5"e
800S162-33	33	12	41' 0"e	35' 5" e	31' 0"e	23' 8"e	23' 8"e	20' 5"e	20' 6"e	20' 6"e	18' 6" e	18' 4"e	18' 4"e	17' 2" e	16' 8"e	16' 8"e	16' 2"e	14' 5"e	14' 5"e	14' 5"e
800S162-33	33	16	35' 6"e	32' 2" e	28' 1" e	20' 6"e	20' 6"e	18' 6" e	17' 9"e	17' 9"e	16'10"e	15' 10"e	15' 10"e	15' 7" e	14' 5"e	14' 5"e	14' 5"e	12' 6"e	12' 6"e	12' 6"e
800S162-33	33	24	28' 11"e	28' 1" e	24' 7" e	16' 8"e	16' 8"e	16' 2" e	14' 5"e	14' 5"e	14' 5"e	12' 11"e	12' 11"e	12'11"e	11' 10"e	11' 10"e	11' 10"e	10' 3"e	10' 3"e	10' 3"e
800S200-33	33	12	44' 0"e	37' 8"e	32' 11"e	25' 4"e	25' 4"e	21' 8" e	22' 0"e	22' 0"e	19' 8"e	19' 8"e	19' 8"e	18' 3"e	17' 11"e	17' 11"e	17' 2"e	15' 6"e	15' 6"e	15' 6"e
800S200-33	33	16	38' 1"e	34' 3" e	29' 11" e	22' 0"e	22' 0"e	19' 8"e	19' 0"e	19' 0"e	17' 11"e	17' 0"e	17' 0"e	16' 7"e	15' 6"e	15' 6"e	15' 6"e	13' 5"e	13' 5"e	13' 5"e
800S200-33	33	24	31' 1"e	29' 11" e	26' 1"e	17' 11"e	17' 11"e	17' 2"e	15' 6"e	15' 6"e	15' 6"e	13'10"e	13' 10"e	13'10"e	12' 8"e	12' 8"e	12' 8"e	11' 0"e	11' 0"e	11' 0"e
800S137-43	33	12	45' 10"	37' 6"	32' 9"	26' 5"	25' 7"	21' 7"	22' 11"	22' 11"	19' 7"	20' 6"e	20' 6"e	18' 2"	18' 8"e	18' 8"e	17' 1"e	16' 2"e	16' 2"e	15' 6"e
800S137-43	33	16	39' 8"	34' 1"	29' 9"	22' 11"	22' 11"	19' 7"	19' 10"e	19' 10"e	17' 9"	17' 9"e	17' 9"e	16'6"e	16' 2"e	16' 2"e	15' 6"e	14' 0"e	14' 0"e	14' 0"e
800S137-43	33	24	32' 5"	29' 9"	26' 0"	18' 8"e	18' 8"e	17' 1" e	16' 2"e	16' 2"e	15' 6" e	14' 6"e	14' 6"e	14'5"e	13' 2"e	13' 2"e	13' 2"e	11' 5"e	11' 5"e	11' 5"e
800S162-43	33	12	49' 1"	39' 0"	34' 0"	28' 6"	26' 7"	22' 5"	24' 8"	24' 2"	20' 4"	22' 1"e	22' 1"e	18' 11"	20' 2"e	20' 2"e	17' 9" e	17' 5"e	17' 5"e	16' 2"e
800S162-43	33	16	42' 9"	35' 5"	30' 11"	24' 8"	24' 2"	20' 4"	21' 4"e	21' 4"e	18' 6"	19' 1"e	19' 1"e	17' 2" e	17' 5"e	17' 5"e	16' 2" e	15' 1"e	15' 1"e	14' 8"e
800S162-43	33	24	34' 11"	30' 11"	27' 0"	20' 2"e	20' 2"e	17' 9" e	17' 5"e	17' 5"e	16' 2" e	15' 7"e	15' 7"e	15' 0" e	14' 3"e	14' 3"e	14' 1" e	12' 4"e	12' 4"e	12' 4"e
800S200-43	33	12	51' 9"	41' 1"	35' 11"	30' 6"	28' 0"	23' 7"	26' 5"e	26' 5"e	21' 5"	23' 7"e	23' 7"e	19'11"e	21' 7"e	21' 7"e	18' 9" e	18' 8"e	18' 8"e	17' 0"e
800S200-43	33	16	45' 9"	37' 4"	32' 7"	26' 5"e	25' 5"e	21' 5"	22' 10"e	22' 10"e	19' 6" e	20' 5"e	20' 5"e	18' 1"e	18' 8"e	18' 8"e	17' 0"e	16' 2"e	16' 2"e	15' 6"e
800S200-43	33	24	37' 4"	32' 7"	28' 6"	21' 7"e	21' 7"e	18' 9" e	18' 8"e	18' 8"e	17' 0"e	16' 8"e	16' 8"e	15' 10"e	15' 3"e	15' 3"e	14' 10"e	13' 2"e	13' 2"e	13' 2"e
800S137-54	50	12	50' 10"	40' 4"	35' 3"	31' 6"	27' 6"	23' 2"	28' 7"	25' 0"	21' 1"	26' 7"	23' 2"	19' 7"	25' 0"	21' 10"	18' 5"	21' 9"	19' 10"	16' 8"
800S137-54	50	16	46' 2"	36' 8"	32' 0"	28' 7"	25' 0"	21' 1"	26' 0"	22' 8"	19' 2"	23' 10"	21' 1"	17' 9"	21' 9"	19' 10"	16' 8"	18' 10"	18' 0"	15' 2"
800S137-54	50	24	40' 4"	32' 0"	27' 11"	25' 0"	21' 10"	18' 5"	21' 9"	19' 10"	16' 8"	19' 5"	18' 5"	15' 6"	17' 9"	17' 4"	14' 7"	15' 4"e	15' 4"e	13' 3"
800S162-54	50	12	52' 10"	41' 11"	36' 7"	32' 9"	28' 7"	24' 1"	29' 9"	26' 0"	21' 11"	27' 7"	24' 1"	20' 4"	26' 0"	22' 8"	19' 1"	23' 4"	20' 7"	17' 4"
800S162-54	50	16	48' 0"	38' 1"	33' 3"	29' 9"	26' 0"	21' 11"	27' 0"	23' 7"	19' 11"	25' 1"	21' 11"	18' 6"	23' 4"	20' 7"	17' 4"	20' 3"	18' 9"	15' 9"
800S162-54	50	24	41' 11"	33' 3"	29' 1"	26' 0"	22' 8"	19' 1"	23' 4"	20' 7"	17' 4"	20' 10"	19' 1"	16' 1"	19' 1"e	18' 0"	15' 2"	16' 6"e	16' 4" e	13' 9"
800S200-54	50	12	55' 7"	44' 2"	38' 7"	34' 5"	30' 1"	25' 4"	31' 4"	27' 4"	23' 1"	29' 1"	25' 4"	21' 5"	27' 4"	23' 10"	20' 2"	24' 10"	21' 8"	18' 3"
800S200-54	50	16	50' 6"	40' 2"	35' 0"	31' 4"	27' 4"	23' 1"	28' 5"	24' 10"	20' 11"	26' 5"	23' 1"	19' 5"	24' 10"	21' 8"	18' 3"	21' 7"e	19' 8"	16' 7"
800S200-54	50	24	44' 2"	35' 0"	30' 7"	27' 4"	23' 10"	20' 2"	24' 10"	21' 8"	18' 3"	22' 3"e	20' 2"	17' 0"	20' 4"e	18' 11"	16' 0"	17' 7"e	17' 2"e	14' 6"e
800S137-68	50	12	54' 10"	43' 6"	38' 0"	34' 0"	29' 8"	25' 0"	30' 10"	26' 11"	22' 9"	28' 8"	25' 0"	21' 1"	26' 11"	23' 7"	19' 10"	24' 6"	21' 5"	18' 0"
800S137-68	50	16	49' 10"	39' 6"	34' 6"	30' 10"	26' 11"	22' 9"	28' 0"	24' 6"	20' 8"	26' 0"	22' 9"	19' 2"	24' 6"	21' 5"	18' 0"	22' 2"	19' 5"	16' 5"
800S137-68	50	24	3' 6"	34' 6"	30' 2"	26' 11"	23' 7"	19' 10"	24' 6"	21' 5"	18' 0"	22' 9"	19' 10"	16' 9"	20' 11"	18' 8"	15' 9"	18' 1"	17' 0"	14' 4"
800S162-68	50	12	57' 0"	45' 3"	39' 6"	35' 4"	30' 10"	26' 0"	32' 1"	28' 0"	23' 8"	29' 10"	26' 0"	21' 11"	28' 0"	24' 6"	20' 8"	25' 6"	22' 3"	18' 9"
800S162-68	50	16	51' 10"	41' 1"	35' 11"	32' 1"	28' 0"	23' 8"	29' 2"	25' 6"	21' 6"	27' 1"	23' 8"	19' 11"	25' 6"	22' 3"	18' 9"	23' 2"	20' 2"	17' 0"
800S162-68	50	24	45' 3"	35' 11"	31' 4"	28' 0"	24' 6"	20' 8"	25' 6"	22' 3"	18' 9"	23' 8"	20' 8"	17' 5"	22' 3"	19' 5"	16' 5"	19' 4"	17' 8"	14' 11"
800S200-68	50	12	59' 9"	47' 5"	41' 5"	37' 0"	32' 4"	27' 3"	33' 7"	29' 4"	24' 9"	31' 2"	27' 3"	23' 0"	29' 4"	25' 8"	21' 7"	26' 8"	23' 4"	19' 8"
800S200-68	50	16	54' 3"	43' 1"	37' 7"	33' 7"	29' 4"	24' 9"	30' 6"	26' 8"	22' 6"	28' 4"	24' 9"	20' 10"	26' 8"	23' 4"	19' 8"	24' 3"	21' 2"	17' 10"
800S200-68	50	24	47' 5"	37' 7"	32' 10"	29' 4"	25' 8"	21' 7"	26' 8"	23' 4"	19' 8"	24' 9"	21' 7"	18' 3"	23' 4"	20' 4"	17' 2"	21' 2"	18' 6"	15' 7"
800S137-97	50	12	60' 10"	48' 3"	42' 2"	37' 8"	32' 11"	27' 9"	34' 3"	29' 11"	25' 3"	31' 9"	27' 9"	23' 5"	29' 11"	26' 1"	22' 0"	27' 2"	23' 9"	20' 0"
800S137-97	50	16	55' 3"	43' 10"	38' 4"	34' 3"	29' 11"	25' 3"	31' 1"	27' 2"	22' 11"	28' 10"	25' 3"	21' 3"	27' 2"	23' 9"	20' 0"	24' 8"	21' 7"	18' 2"
800S137-97	50	24	48' 3"	38' 4"	33' 5"	29' 11"	26' 1"	22' 0"	27' 2"	23' 9"	20' 0"	25' 3"	22' 0"	18' 7"	23' 9"	20' 9"	17' 6"	21' 7"	18' 10"	15' 10"
800S162-97	50	12	63' 4"	50' 3"	43' 11"	39' 3"	34' 3"	28' 11"	35' 8"	31' 2"	26' 3"	33' 1"	28' 11"	24' 4"	31' 2"	27' 2"	22' 11"	28' 3"	24' 8"	20' 10"
800S162-97	50	16	57' 7"	45' 8"	39' 11"	35' 8"	31' 2"	26' 3"	32' 5"	28' 3"	23' 10"	30' 1"	26' 3"	22' 2"	28' 3"	24' 8"	20' 10"	25' 8"	22' 5"	18' 11"
800S162-97	50	24	50' 3"	39' 11"	34' 10"	31' 2"	27' 2"	22' 11"	28' 3"	24' 8"	20' 10"	26' 3"	22' 11"	19' 4"	24' 8"	21' 7"	18' 2"	22' 5"	19' 7"	16' 6"
800S200-97	50	12	66' 5"	52' 9"	46' 1"	41' 2"	35' 11"	30' 4"	37' 5"	32' 8"	27' 6"	34' 9"	30' 4"	25' 7"	32' 8"	28' 6"	24' 1"	29' 8"	25' 11"	21' 10"
800S200-97	50	16	60' 4"	47' 11"	41' 10"	37' 5"	32' 8"	27' 6"	34' 0"	29' 8"	25' 0"	31' 6"	27' 6"	23' 3"	29' 8"	25' 11"	21' 10"	26' 11"	23' 6"	19' 10"
800S200-97	50	24	52' 9"	41' 10"	36' 7"	32' 8"	28' 6"	24' 1"	29' 8"	25' 11"	21' 10"	27' 6"	24' 1"	20' 3"	25' 11"	22' 8"	19' 1"	23' 6"	20' 7"	17' 4"

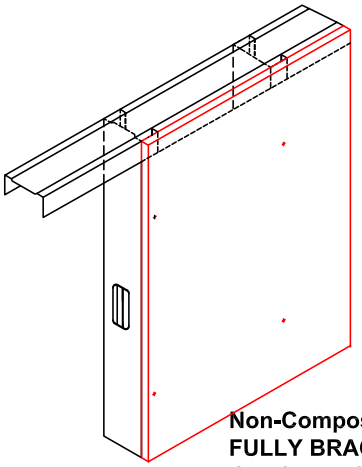

Non-Composite
FULLY BRACED
GYPSUM BOARD FULL HEIGHT

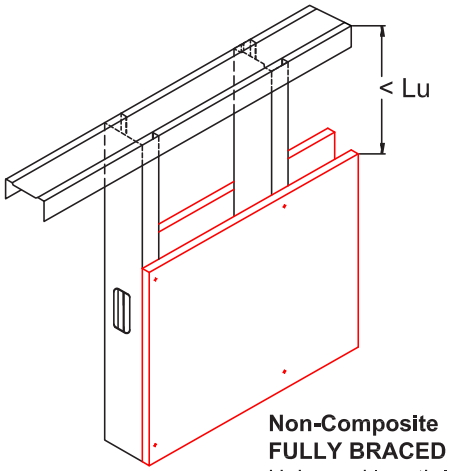

Non-Composite
FULLY BRACED
Unbraced length is less than Lu

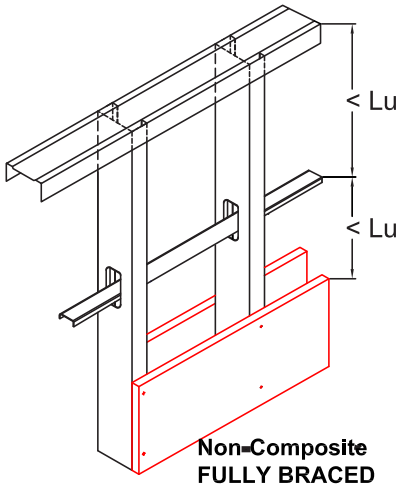

Non-Composite
FULLY BRACED
Bracing spacing above
gypsum is less than Lu

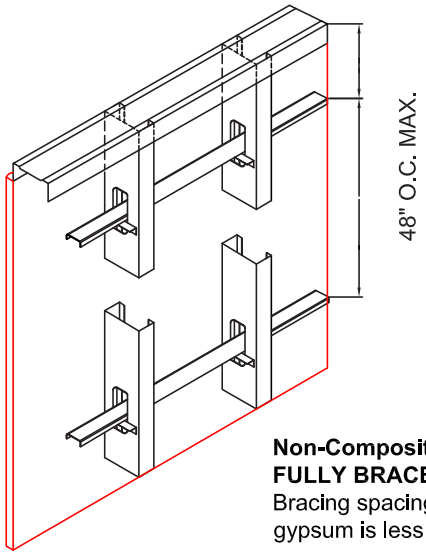

Non-Composite
FULLY BRACED
Bracing spacing above
gypsum is less than Lu

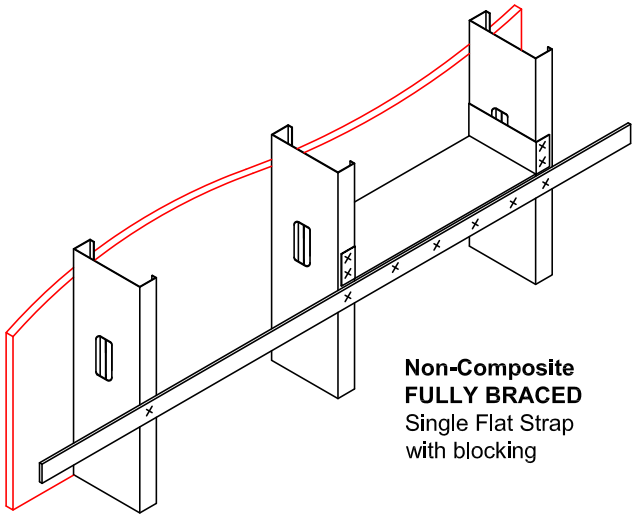

Non-Composite
FULLY BRACED
Single Flat Strap
with blocking

Combined Loading Allowable Axial Load Table Notes

1. Allowable axial loads listed in kips 1 KIP = 1000 lbs.).
2. Allowable axial loads listed are based on simple one span condition.
3. Allowable axial loads determined in accordance with section C5 of AISI S100 and the assumption that axial load passes through centroid of the effective section.
4. Allowable axial loads are based on 4'-0" on center bracing. KyLy and KtLt = 48 inches.
5. Studs are assumed to be adequately braced at a maximum of spacing of Lu to develop allowable moment, Ma.
6. Listed wind pressures represent 1.0 W calculated based on 2009 IBC or 0.6 W calculated based on 2012 IBC. For deflection calculations, listed wind pres pres-sures have been reduced by 0.70 as allowed by IBC. The 5 psf pressure has not been reduced for deflection checks.
7. End supports have not been checked for web crippling. See web crippling tables in this catalog.
8. Listed lateral pressures and axial loads have not been modified for strength checks based on wind/earthquake or multiple transient loads.

Wall	Spacing	250S137-mils (Fy)					250S162-mils (Fy)				
Ht. (ft)	(in) o.c.	-33 (33)	-43 (33)	-54 (50)	-68 (50)	-97 (50)	-33 (33)	-43 (33)	-54 (50)	-68 (50)	-97 (50)
8	12	0.95	1.37	1.9	2.54	3.10	1.02	1.07	2.31	3.00	4.53
	16	0.87	1.03	1.85	2.48	3.09	1.11	1.62	2.25	2.94	4.45
	24	0.73[7]	1.16	1.74	2.36	3.08	0.96	1.47	2.13	2.81	4.3
9	12	0.8	1.18	1.66	2.21	3.04	1.02	1.47	2.01	2.61	3.88
	16	0.72[7]	1.01	1.6	2.14	3.03	0.92	1.37	1.94	2.53	3.8
	24	0.57[6]	0.94[6]	1.47[7]	2.00	3.01	0.75[6]	1.2[7]	1.80	2.39	3.63
10	12	0.67[7]	1.00	1.44	1.9	2.09	0.84	1.24	1.73	2.25	3.32
	16	0.58[6]	0.91[7]	1.36	1.82	2.08	0.74[6]	1.14[7]	1.65	2.17	3.23
	24	0.42[3]	0.74[6]	1.23[6]	1.68[7]	2.06	0.57[6]	0.96[6]	1.51[6]	2.01[7]	3.05
12	12	0.43[6]	0.69[6]	1.05[6]	1.39[7]	2.01	0.56[6]	0.86[6]	1.27[7]	1.66	2.43
	16	0.34[3]	0.59[3]	0.97[6]	1.31[6]	1.09[7]	0.46[3]	0.76[6]	1.18[6]	1.57[7]	2.33
	24	0.18[2]	0.43[2]	0.82[3]	1.15[3]	1.08[6]	0.28[2]	0.58[3]	1.03[3]	1.4[6]	2.14[6]
14	12	0.26[2]	0.46[3]	0.76[6]	1.01[6]	1.05[6]	0.35[3]	0.59[3]	0.93[6]	1.22[6]	1.79[7]
	16	0.17[2]	0.37[2]	0.68[3]	0.93[3]	10.4[6]	0.26[2]	0.49[3]	0.84[3]	1.13[6]	1.69[6]
	24	0.02[1]	0.21[2]	0.54[2]	0.78[2]	1.02[3]	0.09[2]	0.32[2]	0.69[2]	0.97[3]	1.51[3]
16	12	0.15[2]	0.3[2]	0.55[3]	0.74[3]	1.01[6]	0.21[2]	0.4[2]	0.68[3]	0.91[3]	1.34[6]
	16	0.06[1]	0.22[2]	0.47[2]	0.66[2]	1.00[3]	0.12[2]	0.31[2]	0.59[2]	0.82[3]	1.25[3]
	24	0.00[1]	0.07[1]	0.34[2]	0.52[2]	0.09[2]	0.00[1]	0.15[1]	0.45[2]	0.67[2]	1.08[2]

Wall	Spacing	350S137-mils (Fy)					350S162-mils (Fy)				
Ht. (ft)	(in) o.c.	-33 (33)	-43 (33)	-54 (50)	-68 (50)	-97 (50)	-33 (33)	-43 (33)	-54 (50)	-68 (50)	-97 (50)
8	12	1.44	2.07	3.16	4.13	5.98	1.81	2.56	3.97	5.08	7.48
	16	1.37	1.99	3.10	4.06	5.92	1.74	2.48	3.90	5.01	7.41
	24	1.23	1.85	2.97	3.93	5.80	1.58	2.32	3.76	4.87	7.27
9	12	1.33	1.93	2.92	3.82	5.84	1.67	2.38	3.65	4.67	6.88
	16	1.24	1.84	2.84	3.74	5.76	1.57	2.28	3.56	4.58	6.79
	24	1.07	1.66	2.69	3.58	5.60	1.39	2.09	3.39	4.41	6.62
10	12	1.20	1.77	2.64	3.47	5.29	1.51	2.18	3.29	4.23	6.22
	16	1.10	1.66	2.55	3.37	5.19	1.40	2.07	3.19	4.12	6.12
	24	0.91[7]	1.45	2.37	3.18	5.00	1.19	1.84	2.99	3.92	5.92
12	12	0.93	1.41	2.09	2.73	4.12	1.18	1.75	2.56	3.31	4.86
	16	0.80[7]	1.28	1.97	2.61	4.00	1.04[7]	1.61	2.44	3.18	4.73
	24	0.58[6]	1.03[6]	1.76[7]	2.39	3.77	0.79[6]	1.34[6]	2.21	2.94	4.50
14	12	0.66[6]	1.06[7]	1.60	2.10	3.15	0.86[6]	1.33	1.95	2.54	3.75
	16	0.53[6]	0.91[6]	1.47[6]	1.97	3.02	0.71[6]	1.17[6]	1.82[7]	2.40	3.61
	24	0.30[3]	0.65[3]	1.25[6]	1.74[6]	2.79[7]	0.46[3]	0.89[6]	1.58[6]	2.16[6]	3.36
16	12	0.45[3]	0.75[6]	1.20[6]	1.60[7]	2.42	0.59[6]	0.96[6]	1.48[7]	1.95	2.90
	16	0.32[3]	0.61[3]	1.08[6]	1.47[6]	2.29[7]	0.45[3]	0.80[6]	1.35[6]	1.81[6]	2.77
	24	0.09[2]	0.36[2]	0.87[3]	1.24[3]	2.06[6]	0.21[2]	0.54[3]	1.12[3]	1.57[6]	2.52[6]

NOTES:

1 Deflection exceeds L/120
2 Deflection exceeds L/240
3 Deflection exceeds L/360
6 Deflection exceeds L/600
7 Deflection exceeds L/720
Axial Load Multiplier = 1
Lateral Load Multiplier - Strength = 1
Lateral Load Multiplier - Deflection = 1.0

Allowable Combined Axial and Bending Loads 5psf lateral load

Wall	Spacing	362S137-mils (Fy)					362S162-mils (Fy)				
Ht. (ft)	(in) o.c.	-33 (33)	-43 (33)	-54 (50)	-68 (50)	-97 (50)	-33 (33)	-43 (33)	-54 (50)	-68 (50)	-97 (50)
8	12	1.49	2.14	3.32	4.37	6.12	1.87	2.65	4.15	5.38	7.90
	16	1.42	2.07	3.26	4.30	6.06	1.80	2.57	4.08	5.31	7.83
	24	1.29	1.93	3.13	4.17	5.95	1.65	2.42	3.94	5.17	7.70
9	12	1.38	2.01	3.11	4.07	6.05	1.74	2.48	3.86	4.99	7.32
	16	1.30	1.92	3.02	3.99	5.97	1.64	2.38	3.77	4.90	7.23
	24	1.13	1.74	2.87	3.82	5.81	1.46	2.19	3.60	4.72	7.06
10	12	1.26	1.85	2.85	3.73	5.67	1.58	2.29	3.53	4.55	6.67
	16	1.16	1.75	2.75	3.63	5.57	1.47	2.17	3.42	4.44	6.57
	24	0.96	1.54	2.57	3.44	5.38	1.26	1.95	3.22	4.23	6.37
12	12	0.99	1.51	2.27	2.97	4.48	1.25	1.87	2.79	3.60	5.29
	16	0.86[7]	1.37	2.15	2.85	4.36	1.11	1.72	2.66	3.47	5.16
	24	0.63[6]	1.12[6]	1.93[7]	2.62	4.13	0.86[6]	1.44[7]	2.42	3.22	4.92
14	12	0.72[6]	1.15[7]	1.75	2.30	3.45	0.93[7]	1.44	2.14	2.78	4.10
	16	0.59[6]	1.00[6]	1.62[7]	2.16	3.32	0.78[6]	1.28[7]	2.00	2.64	3.95
	24	0.34[3]	0.73[3]	1.39[6]	1.92[6]	3.07	0.52[3]	0.99[6]	1.75[6]	2.38[7]	3.69
16	12	0.50[6]	0.83[6]	1.33[6]	1.76[7]	2.66	0.65[6]	1.06[6]	1.63[7]	2.14	3.18
	16	0.36[3]	0.68[3]	1.20[6]	1.63[6]	2.53	0.51[3]	0.90[6]	1.49[6]	2.00[7]	3.04
	24	0.12[2]	0.42[2]	0.97[3]	1.39[3]	2.28	0.25[2]	0.62[3]	1.25[3]	1.74[6]	2.78

Wall	Spacing	362S200-mils (Fy)					362S250-mils (Fy)			
Ht. (ft)	(in) o.c.	-33 (33)	-43 (33)	-54 (50)	-68 (50)	-97 (50)	-43 (33)	-54 (50)	-68 (50)	-97 (50)
8	12	2.25	3.28	5.18	6.68	9.57				
	16	2.17	3.20	5.10	6.60	9.50				
	24	2.01	3.03	4.94	6.45	9.36				
9	12	2.10	3.07	4.79	6.17	8.84	3.52	5.46	7.17	10.24
	16	2.00	2.96	4.69	6.07	8.75	3.40	5.35	7.06	10.14
	24	1.80	2.76	4.49	5.88	8.58	3.18	5.14	6.85	9.96
10	12	1.93	2.84	4.37	5.61	8.06				
	16	1.81	2.71	4.25	5.49	7.95				
	24	1.57	2.47	4.01	5.27	7.74				
12	12	1.56	2.32	3.45	4.44	6.42	2.74	4.06	5.21	7.53
	16	1.40	2.16	3.30	4.30	6.28	2.55	3.90	5.05	7.38
	24	1.12[6]	1.86	3.03	4.03	6.02	2.22	3.59	4.74	7.11
14	12	1.18	1.81	2.64	3.43	5.00				
	16	1.01[6]	1.63[7]	2.48	3.27	4.84				
	24	0.70[6]	1.31[6]	2.19[6]	2.99	4.56				
16	12	0.84[6]	1.36[7]	2.01	2.66	3.91	1.63	2.40	3.15	4.67
	16	0.67[6]	1.18[6]	1.86[6]	2.50	3.76	1.42[6]	2.22[7]	2.97	4.50
	24	0.38[3]	0.86[3]	1.58[6]	2.21[6]	3.47[7]	1.06[6]	1.90[6]	2.64[6]	4.19

NOTES:

1 Deflection exceeds L/120
2 Deflection exceeds L/240
3 Deflection exceeds L/360
6 Deflection exceeds L/600
7 Deflection exceeds L/720
Axial Load Multiplier = 1
Lateral Load Multiplier - Strength = 1
Lateral Load Multiplier - Deflection = 1.0

Allowable Combined Axial and Bending Loads 5psf lateral load

Wall	Spacing	400S137-mils (Fy)					400S162-mils (Fy)				
Ht. (ft)	(in) o.c.	-33 (33)	-43 (33)	-54 (50)	-68 (50)	-97 (50)	-33 (33)	-43 (33)	-54 (50)	-68 (50)	-97 (50)
8	12	1.61	2.31	3.67	4.98	6.49	2.03	2.87	4.62	6.18	9.12
	16	1.55	2.25	3.61	4.91	6.44	1.96	2.80	4.55	6.11	9.05
	24	1.42	2.12	3.49	4.78	6.34	1.82	2.66	4.42	5.97	8.92
9	12	1.52	2.20	3.49	4.79	6.43	1.91	2.72	4.37	5.85	8.60
	16	1.44	2.12	3.42	4.70	6.37	1.82	2.63	4.28	5.76	8.52
	24	1.28	1.95	3.27	4.54	6.23	1.65	2.46	4.11	5.59	8.35
10	12	1.41	2.07	3.28	4.49	6.36	1.77	2.56	4.08	5.47	8.00
	16	1.31	1.97	3.19	4.38	6.27	1.67	2.45	3.97	5.36	7.90
	24	1.12	1.77	3.00	4.18	6.09	1.46	2.23	3.77	5.14	7.69
12	12	1.16	1.76	2.77	3.75	5.64	1.46	2.17	3.41	4.54	6.65
	16	1.03	1.62	2.64	3.61	5.51	1.32	2.02	3.27	4.39	6.51
	24	0.80[6]	1.36[7]	2.40	3.35	5.25	1.06[7]	1.74	3.01	4.12	6.24
14	12	0.90[7]	1.41	2.22	2.96	4.44	1.14	1.75	2.71	3.57	5.25
	16	0.75[6]	1.25[7]	2.08	2.80	4.29	0.98[6]	1.58	2.55	3.41	5.09
	24	0.49[3]	0.96[6]	1.81[6]	2.52[7]	4.01	0.70[6]	1.26[6]	2.27[7]	3.10	4.80
16	12	0.65[6]	1.08[6]	1.74	2.30	3.47	0.84[6]	1.35[7]	2.12	2.78	4.12
	16	0.50[3]	0.91[6]	1.59[6]	2.14[7]	3.31	0.68[6]	1.17[6]	1.96[7]	2.61	3.96
	24	0.23[2]	0.61[3]	1.32[6]	1.86[6]	3.03 [6]	0.39[3]	0.85[3]	1.67[6]	2.31[6]	3.66[7]

Wall	Spacing	400S200-mils (Fy)					400S250-mils (Fy)			
Ht. (ft)	(in) o.c.	-33 (33)	-43 (33)	-54 (50)	-68 (50)	-97 (50)	-43 (33)	-54 (50)	-68 (50)	-97 (50)
8	12	2.42	3.55	5.77	7.63	11.06	3.96	6.27	8.67	12.78
	16	2.34	3.48	5.70	7.56	10.99	3.88	6.19	8.59	12.71
	24	2.19	3.32	5.54	7.41	10.85	3.72	6.04	8.43	12.57
9	12	2.28	3.37	5.43	7.19	10.39	3.79	6.03	8.28	12.02
	16	2.19	3.27	5.33	7.10	10.30	3.69	5.93	8.17	11.93
	24	2.00	3.08	5.14	6.91	10.13	3.48	5.73	7.96	11.74
10	12	2.13	3.16	5.04	6.70	9.65	3.60	5.70	7.78	11.18
	16	2.01	3.04	4.92	6.58	9.54	3.47	5.57	7.64	11.07
	24	1.79	2.81	4.69	6.34	9.33	3.22	5.33	7.38	10.84
12	12	1.79	2.69	4.19	5.57	8.03	3.14	4.92	6.50	9.36
	16	1.63	2.53	4.03	5.41	7.88	2.96	4.74	6.32	9.20
	24	1.35	2.22	3.74	5.11	7.59	2.62	4.41	5.97	8.90
14	12	1.43	2.19	3.32	4.39	6.37	2.58	3.92	5.15	7.51
	16	1.25[7]	2.00	3.14	4.21	6.20	2.37	3.71	4.95	7.32
	24	0.92[6]	1.65[7]	2.82	3.88	5.89	1.98[7]	3.35	4.57	6.98
16	12	1.07[7]	1.71	2.60	3.42	5.03	2.04	3.07	4.04	5.96
	16	0.89[6]	1.51[7]	2.41	3.24	4.85	1.81[7]	2.86	3.82	5.76
	24	0.56[3]	1.16[6]	2.09[6]	2.91[7]	4.52	1.41[6]	2.49[6]	3.44[7]	5.41

NOTES:

1 Deflection exceeds L/120
2 Deflection exceeds L/240
3 Deflection exceeds L/360
6 Deflection exceeds L/600
7 Deflection exceeds L/720
Axial Load Multiplier = 1
Lateral Load Multiplier - Strength = 1
Lateral Load Multiplier - Deflection = 1.0

Allowable Combined Axial and Bending Loads 5psf lateral load

Wall	Spacing	550S137-mils (Fy)					550S162-mils (Fy)				
Ht. (ft)	(in) o.c.	-33 (33)	-43 (33)	-54 (50)	-68 (50)	-97 (50)	-33 (33)	-43 (33)	-54 (50)	-68 (50)	-97 (50)
8	12	1.78	2.52	3.86	5.10	7.53	2.39	3.38	5.63	7.45	11.32
	16	1.73	2.49	3.83	5.07	7.50	2.34	3.33	5.58	7.41	11.28
	24	1.64	2.41	3.76	5.01	7.44	2.24	3.23	5.49	7.32	11.19
9	12	1.74	2.49	3.83	5.07	7.50	2.32	3.31	5.55	7.41	11.27
	16	1.68	2.44	3.79	5.03	7.46	2.26	3.24	5.49	7.35	11.22
	24	1.57	2.34	3.70	4.95	7.38	2.13	3.12	5.38	7.24	11.10
10	12	1.69	2.45	3.80	5.04	7.47	2.25	3.22	5.41	7.35	11.22
	16	1.62	2.38	3.74	4.98	7.41	2.16	3.14	5.34	7.27	11.14
	24	1.48	2.26	3.63	4.87	7.31	2.00	2.99	5.19	7.12	10.99
12	12	1.58	2.34	3.70	4.94	7.37	2.05	3.00	5.04	6.87	11.04
	16	1.48	2.25	3.61	4.86	7.29	1.93	2.89	4.93	6.76	10.91
	24	1.28	2.06	3.44	4.69	7.12	1.71	2.68	4.71	6.54	10.66
14	12	1.43	2.21	3.56	4.80	7.23	1.81	2.72	4.54	6.23	10.00
	16	1.29	2.07	3.44	4.68	7.10	1.66	2.57	4.39	6.07	9.83
	24	1.03	1.82	3.20	4.44	6.85	1.37	2.29	4.11	5.78	9.49
16	12	1.21	1.95	3.23	4.55	7.01	1.53	2.39	3.95	5.45	8.76
	16	1.04	1.78	3.07	4.38	6.82	1.35	2.20	3.77	5.26	8.54
	24	0.74[6]	1.47[7]	2.77	4.05	6.47	1.02[6]	1.87	3.43	4.90	8.12

NOTES:

1 Deflection exceeds L/120
2 Deflection exceeds L/240
3 Deflection exceeds L/360
6 Deflection exceeds L/600
7 Deflection exceeds L/720
Axial Load Multiplier = 1
Lateral Load Multiplier - Strength = 1
Lateral Load Multiplier - Deflection = 1.0

Allowable Combined Axial and Bending Loads 5psf lateral load

Wall	Spacing	600S137-mils (Fy)					600S162-mils (Fy)				
Ht. (ft)	(in) o.c.	-33 (33)	-43 (33)	-54 (50)	-68 (50)	-97 (50)	-33 (33)	-43 (33)	-54 (50)	-68 (50)	-97 (50)
8	12	1.77	2.51	3.81	5.05	7.54	2.42	3.40	5.61	7.45	11.39
	16	1.73	2.47	3.78	5.02	7.52	2.37	3.35	5.57	7.41	11.35
	24	1.65	2.39	3.72	4.96	7.46	2.28	3.27	5.49	7.33	11.28
9	12	1.74	2.47	3.78	5.02	7.52	2.38	3.36	5.57	7.41	11.35
	16	1.69	2.43	3.74	4.98	7.48	2.32	3.30	5.52	7.36	11.31
	24	1.59	2.33	3.66	4.90	7.41	2.20	3.19	5.42	7.26	11.21
10	12	1.70	2.44	3.75	4.99	7.49	2.33	3.31	5.53	7.37	11.31
	16	1.63	2.37	3.70	4.94	7.44	2.25	3.24	5.46	7.30	11.25
	24	1.51	2.25	3.59	4.83	7.36	2.10	3.11	5.33	7.17	11.12
12	12	1.60	2.34	3.66	4.90	7.41	2.17	3.15	5.35	7.25	11.19
	16	1.51	2.25	3.59	4.82	7.34	2.06	3.05	5.25	7.15	11.09
	24	1.33	2.07	3.43	4.67	7.21	1.85	2.85	5.05	6.95	10.89
14	12	1.48	2.22	3.55	4.79	7.31	1.95	2.91	4.93	6.77	10.96
	16	1.36	2.09	3.44	4.67	7.20	1.81	2.78	4.80	6.63	10.80
	24	1.11	1.85	3.21	4.45	7.00	1.54	2.51	4.53	6.35	10.49
16	12	1.34	2.07	3.40	4.63	7.15	1.71	2.62	4.41	6.10	9.89
	16	1.18	1.90	3.24	4.46	7.00	1.53	2.45	4.24	5.91	9.68
	24	0.87[6]	1.59	2.95	4.16	6.71	1.20[7]	2.12	3.91	5.57	9.28

Wall	Spacing	600S200-mils (Fy)					600S250-mils (Fy)			
Ht. (ft)	(in) o.c.	-33 (33)	-43 (33)	-54 (50)	-68 (50)	-97 (50)	-43 (33)	-54 (50)	-68 (50)	-97 (50)
8	12	2.86	4.31	7.46	9.97	15.65	4.65	7.64	11.05	18.28
	16	2.81	4.26	7.41	9.93	15.60	4.60	7.59	11.00	18.22
	24	2.72	4.16	7.31	9.83	15.51	4.50	7.50	10.90	18.12
9	12	2.80	4.23	7.31	9.79	15.39	4.57	7.51	10.85	17.92
	16	2.74	4.16	7.25	9.73	15.33	4.50	7.44	10.78	17.85
	24	2.62	4.03	7.12	9.61	15.20	4.37	7.32	10.64	17.72
10	12	2.73	4.13	7.14	9.58	15.07	4.47	7.35	10.60	17.49
	16	2.65	4.05	7.05	9.50	14.99	4.39	7.27	10.52	17.40
	24	2.50	3.88	6.89	9.35	14.83	4.23	7.11	10.35	17.23
12	12	2.55	3.88	6.67	9.00	14.21	4.24	6.94	10.00	16.41
	16	2.44	3.76	6.55	8.89	14.09	4.11	6.82	9.87	16.28
	24	2.22	3.53	6.31	8.66	13.85	3.88	6.59	9.62	16.02
14	12	2.32	3.56	6.07	8.26	13.08	3.94	6.46	9.26	15.07
	16	2.17	3.40	5.91	8.10	12.91	3.77	6.29	9.08	14.88
	24	1.89	3.09	5.59	7.79	12.58	3.45	5.98	8.73	14.52
16	12	2.05	3.18	5.38	7.38	11.74	3.59	5.96	8.44	13.53
	16	1.87	2.98	5.18	7.17	11.52	3.38	5.75	8.21	13.29
	24	1.52	2.61	4.79	6.79	11.09	2.98	5.34	7.76	12.82

NOTES:

1 Deflection exceeds L/120
2 Deflection exceeds L/240
3 Deflection exceeds L/360
6 Deflection exceeds L/600
7 Deflection exceeds L/720
Axial Load Multiplier = 1
Lateral Load Multiplier - Strength = 1
Lateral Load Multiplier - Deflection = 1.0

Allowable Combined Axial and Bending Loads 5psf lateral load

Wall	Spacing	800S137-mils (Fy)					800S162-mils (Fy)				
Ht. (ft)	(in) o.c.	-33 (33)	-43 (33)	-54 (50)	-68 (50)	-97 (50)	-33 (33)	-43 (33)	-54 (50)	-68 (50)	-97 (50)
8	12	1.71	2.43	3.57	4.74	7.21	2.39	3.35	5.43	7.25	11.25
	16	1.68	2.40	3.55	4.72	7.19	2.36	3.32	5.40	7.22	11.23
	24	1.63	2.35	3.50	4.68	7.16	2.29	3.26	5.35	7.16	11.17
9	12	1.69	2.40	3.55	4.73	7.20	2.37	3.33	5.41	7.22	11.23
	16	1.65	2.37	3.52	4.70	7.17	2.32	3.29	5.37	7.19	11.20
	24	1.58	2.30	3.47	4.65	7.12	2.24	3.21	5.30	7.12	11.13
10	12	1.66	2.38	3.53	4.71	7.18	2.33	3.30	5.38	7.19	11.20
	16	1.62	2.34	3.49	4.67	7.15	2.28	3.25	5.33	7.15	11.16
	24	1.53	2.26	3.43	4.61	7.09	2.18	3.15	5.24	7.06	11.07
12	12	1.60	2.32	3.48	4.66	7.13	2.26	3.22	5.31	7.13	11.14
	16	1.54	2.26	3.43	4.61	7.09	2.18	3.25	5.33	7.06	11.07
	24	1.41	2.14	3.33	4.51	7.00	2.03	3.00	5.11	6.93	10.94
14	12	1.53	2.25	3.42	4.60	7.08	2.17	3.13	5.22	7.04	11.05
	16	1.44	2.16	3.35	4.53	7.01	2.06	3.03	5.13	6.94	10.95
	24	1.27	2.00	3.21	4.40	6.88	1.85	2.83	4.94	6.76	10.76
16	12	1.44	2.16	3.34	4.52	7.00	1.44	2.16	3.34	4.52	7.00
	16	1.32	2.05	3.25	4.43	6.91	1.32	2.05	3.25	4.43	6.91
	24	1.10	1.83	3.06	4.25	6.74	1.10	1.83	3.06	4.25	6.74

Wall	Spacing	800S200-mils (Fy)					800S250-mils (Fy)			
Ht. (ft)	(in) o.c.	-33 (33)	-43 (33)	-54 (50)	-68 (50)	-97 (50)	-43 (33)	-54 (50)	-68 (50)	-97 (50)
8	12	2.97	4.47	7.74	10.29	15.98	4.89	8.17	11.80	19.77
	16	2.93	4.44	7.71	10.25	15.95	4.86	8.14	11.76	19.73
	24	2.86	4.36	7.64	10.19	15.88	4.78	8.06	11.69	19.66
9	12	2.94	4.44	7.71	10.26	15.95	4.85	8.10	11.72	19.65
	16	2.89	4.39	7.67	10.21	15.91	4.80	8.06	11.68	19.60
	24	2.80	4.30	7.57	10.13	15.83	4.70	7.97	11.58	19.51
10	12	2.90	4.41	7.68	10.22	15.92	4.79	8.02	11.63	19.51
	16	2.85	1.35	7.62	10.17	15.87	4.73	7.97	11.57	19.45
	24	2.73	4.23	7.50	10.06	15.76	4.61	7.85	11.45	19.33
12	12	2.82	4.32	7.59	10.01	15.84	4.66	7.81	11.39	19.12
	16	2.74	4.23	7.50	10.06	15.76	4.57	7.73	11.29	19.03
	24	2.57	4.06	7.32	9.90	15.60	4.39	7.56	11.11	18.84
14	12	2.69	4.16	7.36	9.96	15.72	4.48	7.52	10.99	18.47
	16	2.58	4.04	7.24	9.84	15.61	4.36	7.40	10.86	18.34
	24	2.35	3.80	6.99	9.61	15.38	4.12	7.17	10.60	18.08
16	12	2.52	3.93	6.95	9.45	15.15	4.26	7.15	10.42	17.49
	16	2.37	3.77	6.78	9.30	15.00	4.10	6.99	10.25	17.32
	24	2.09	3.46	6.46	9.00	14.68	3.78	6.69	9.92	16.97

NOTES:

1 Deflection exceeds L/120
2 Deflection exceeds L/240
3 Deflection exceeds L/360
6 Deflection exceeds L/600
7 Deflection exceeds L/720
Axial Load Multiplier = 1
Lateral Load Multiplier - Strength = 1
Lateral Load Multiplier - Deflection = 1.0

Allowable Combined Axial and Bending Loads 5psf lateral load

Wall	Spacing	1000S162-mils (Fy)				1000S200-mils (Fy)				1000S250-mils (Fy)			
Ht. (ft)	(in) o.c.	-43 (33)	-54 (50)	-68 (50)	-97 (50)	-43 (33)	-54 (50)	-68 (50)	-97 (50)	-43 (33)	-54 (50)	-68 (50)	-97 (50)
8	12	3.28	5.20	6.95	10.86	4.44	7.60	10.10	15.78	4.96	8.27	11.91	19.91
	16	3.25	5.18	6.93	10.84	4.41	7.57	10.07	15.75	4.93	8.24	11.88	19.88
	24	3.20	5.14	6.89	10.80	4.35	7.52	10.02	15.70	4.87	8.18	11.82	19.82
9	12	3.26	5.19	6.93	10.84	4.41	7.58	10.08	15.75	4.93	8.24	11.89	19.88
	16	3.22	5.16	6.91	10.82	4.38	7.54	10.05	15.72	4.89	8.21	11.85	19.85
	24	3.16	5.10	6.86	10.77	4.30	7.47	9.98	15.66	4.82	8.13	11.78	19.77
10	12	3.23	5.16	6.92	10.82	4.39	7.55	10.05	15.73	4.90	8.22	11.86	19.85
	16	3.19	5.13	6.88	10.79	4.34	7.51	10.01	15.69	4.86	8.17	11.81	19.81
	24	3.12	5.06	6.82	10.73	4.25	7.42	9.93	15.61	4.76	8.08	11.72	19.72
12	12	3.18	5.12	6.87	10.78	4.32	7.49	9.99	15.67	4.84	8.15	11.79	19.79
	16	3.12	5.07	6.82	10.73	4.26	7.42	9.93	15.61	4.77	8.08	11.72	19.72
	24	3.01	4.97	6.72	10.64	4.13	7.29	9.81	15.49	4.63	7.95	11.58	19.58
14	12	3.11	5.06	6.81	10.72	4.25	7.41	9.92	15.59	4.73	8.03	11.68	19.70
	16	3.04	4.99	6.74	10.66	4.15	7.32	9.83	15.51	4.64	7.93	11.58	19.60
	24	2.88	4.85	6.61	10.53	3.97	7.14	9.65	15.33	4.45	7.75	11.39	19.41
16	12	3.04	4.98	6.74	10.65	4.15	7.31	9.82	15.50	4.59	7.80	11.42	19.37
	16	2.93	4.89	6.65	10.57	4.03	7.19	9.70	15.38	4.46	7.68	11.29	19.24
	24	2.73	4.71	6.47	10.39	3.79	6.95	9.46	15.14	4.21	7.44	11.03	18.97

Wall	Spacing	1200S162-mils (Fy)			1200S200-mils (Fy)			1200S250-mils (Fy)	
Ht. (ft)	(in) o.c.	-54 (50)	-68 (50)	-97 (50)	-54 (50)	-68 (50)	-97 (50)	-68 (50)	-97 (50)
8	12	4.95	6.63	10.38	6.69	9.66	15.46[7]	11.11	19.49
	16	4.93	6.61	10.36	6.67	9.64	15.44[7]	11.09	19.47
	24	4.90	6.58	10.33	6.63	9.60	15.40[7]	11.04	19.42
9	12	4.94	6.61	10.36	6.67	9.64	15.45[7]	11.09	19.47
	16	4.92	6.59	10.34	6.65	9.62	15.42[7]	11.06	19.44
	24	4.87	6.55	10.31	6.60	6.56	15.37[7]	11.00	19.38
10	12	4.92	6.60	10.35	6.65	9.62	15.43[7]	11.07	19.45
	16	4.89	6.57	10.33	6.62	9.59	15.39[7]	11.03	19.41
	24	4.84	6.52	10.28	6.56	9.53	15.33[7]	10.96	19.33
12	12	4.89	6.56	10.32	6.61	9.58	15.38[7]	11.02	19.39
	16	4.85	6.52	10.28	6.57	9.53	15.33[7]	10.97	19.34
	24	4.77	6.45	10.21	6.48	9.43	15.24[7]	10.86	19.23
14	12	4.84	6.52	10.27	6.57	9.52	15.33[7]	10.96	19.33
	16	4.79	6.47	10.23	6.51	9.45	15.26[7]	10.88	19.25
	24	4.68	6.36	10.13	6.38	9.32	15.01[7]	10.74	19.09
16	12	4.79	6.47	10.23	6.51	9.45	15.26[7]	10.88	19.24
	16	4.71	6.40	10.16	6.43	9.36	15.17[7]	10.79	19.14
	24	4.57	6.26	10.03	6.27	9.18	14.99[7]	10.59	18.93

NOTES:

1 Deflection exceeds L/120
2 Deflection exceeds L/240
3 Deflection exceeds L/360
6 Deflection exceeds L/600
7 Deflection exceeds L/720
Axial Load Multiplier = 1
Lateral Load Multiplier - Strength = 1
Lateral Load Multiplier - Deflection = 1.0

Allowable Combined Axial and Bending Loads 15psf lateral load

Wall	Spacing	250S137-mils (Fy)					250S162-mils (Fy)				
Ht. (ft)	(in) o.c.	-33 (33)	-43 (33)	-54 (50)	-68 (50)	-97 (50)	-33 (33)	-43 (33)	-54 (50)	-68 (50)	-97 (50)
8	12	0.54[6]	0.97	1.58	2.19	3.55	0.75[7]	1.26	1.96	2.63	4.10
	16	0.37[6]	0.79[6]	1.43[7]	2.03	3.35	0.56[6]	1.06[7]	1.80	2.47	3.90
	24	0.06[3]	0.47[6]	1.17[6]	1.74[6]	2.99	0.22[3]	0.71[6]	1.51[6]	2.16[7]	3.54
9	12	0.36[6]	0.73[6]	1.30[7]	1.81	2.91	0.53[6]	0.97[7]	1.61	2.19	3.40
	16	0.18[3]	0.54[6]	1.14[6]	1.64[6]	2.70	0.33[6]	0.77[6]	1.44[6]	2.01[7]	3.19
	24	0.00[2]	0.21[3]	0.85[3]	1.33[6]	2.32[6]	0.00[3]	0.41[3]	1.13[6]	1.68[6]	2.81[7]
10	12	0.20[3]	0.53[6]	1.04[6]	1.48[6]	2.36	0.34[3]	0.72[6]	1.31[6]	1.80[7]	2.81
	16	0.02[2]	0.34[3]	0.88[3]	1.30[6]	2.15[6]	0.14[3]	0.52[3]	1.13[6]	1.61[6]	2.59[7]
	24	0.00[2]	0.01[2]	0.59[2]	0.99[3]	1.78[6]	0.00[2]	0.16[2]	0.81[3]	1.27[3]	2.20[6]
12	12	0.00[2]	0.22[2]	0.64[3]	0.95[3]	1.55[6]	0.06[2]	0.35[3]	0.83[3]	1.19[6]	1.90[6]
	16	0.00[2]	0.03[2]	0.48[2]	0.78[3]	1.35[3]	0.00[2]	0.15[2]	0.65[3]	1.00[3]	1.68[6]
	24	0.00[1]	0.00[1]	0.20[2]	0.48[2]	1.00[2]	0.00[1]	0.00[2]	0.35[2]	0.67[2]	1.31[3]
14	12	0.00[1]	0.01[2]	0.36[2]	0.59[2]	1.02[3]	0.00[2]	0.11[2]	0.50[2]	0.77[3]	1.28[3]
	16	0.00[1]	0.00[1]	0.21[2]	0.43[2]	0.83[2]	0.00[1]	0.00[2]	0.33[2]	0.59[2]	1.08[3]
	24	0.00[1]	0.00[1]	0.00[1]	0.15[1]	0.52[2]	0.00[1]	0.00[1]	0.05[1]	0.29[2]	0.74[2]
16	12	0.00[1]	0.00[1]	0.18[1]	0.35[2]	0.66[2]	0.00[1]	0.00[1]	0.27[2]	0.48[2]	0.86[2]
	16	0.00[1]	0.00[1]	0.04[1]	0.20[1]	0.49[2]	0.00[1]	0.00[1]	0.12[1]	0.32[2]	0.68[2]
	24	0.00[1]	0.00[1]	0.00[1]	0.00[1]	0.21[1]	0.00[1]	0.00[1]	0.00[1]	0.04[1]	0.37[1]

Wall	Spacing	350S137-mils (Fy)					350S162-mils (Fy)				
Ht. (ft)	(in) o.c.	-33 (33)	-43 (33)	-54 (50)	-68 (50)	-97 (50)	-33 (33)	-43 (33)	-54 (50)	-68 (50)	-97 (50)
8	12	1.04	1.64	2.79	3.74	5.63	1.37	2.10	3.56	4.66	7.08
	16	0.85	1.45	2.61	3.56	5.46	1.16	1.89	3.36	4.46	6.88
	24	0.50[7]	1.07	2.27	3.21	5.12	0.78	1.49	2.99	4.08	6.51
9	12	0.84	1.41	2.46	3.35	5.36	1.13	1.82	3.14	4.16	6.38
	16	0.62[7]	1.18	2.25	3.13	5.14	0.90	1.57	2.91	3.92	6.14
	24	0.23[6]	0.75[6]	1.86[7]	2.71	4.71	0.46[6]	1.11[7]	2.48	3.48	5.70
10	12	0.64[7]	1.17	2.12	2.92	4.73	0.90	1.53	2.71	3.63	5.64
	16	0.40[6]	0.91[7]	1.89	2.67	4.47	0.64[6]	1.25	2.45	3.37	5.37
	24	0.00[3]	0.44[6]	1.46[6]	2.21[7]	4.00	0.17[6]	0.74[6]	1.99[7]	2.88	4.87
12	12	0.28[6]	0.70[6]	1.48[7]	2.09	3.46	0.47[6]	0.98[6]	1.90[7]	2.62	4.17
	16	0.02[3]	0.41[6]	1.22[6]	1.82[6]	3.18	0.18[3]	0.67[6]	1.62[6]	2.33[7]	3.88
	24	0.00[2]	0.00[3]	0.77[3]	1.34[6]	2.68[6]	0.00[2]	0.13[3]	1.13[3]	1.81[6]	3.34[6]
14	12	0.00[3]	0.32[3]	0.96[6]	1.43[6]	2.48[7]	0.13[3]	0.53[3]	1.27[6]	1.83[6]	3.03
	16	0.00[2]	0.04[2]	0.71[3]	1.16[3]	2.20[6]	0.00[2]	0.22[3]	1.00[3]	1.54[6]	2.73[6]
	24	0.00[2]	0.00[2]	0.28[2]	0.70[2]	1.71[3]	0.00[2]	0.00[2]	0.53[2]	1.04[3]	2.21[6]
16	12	0.00[2]	0.05[2]	0.59[3]	0.95[3]	1.76[6]	0.00[2]	0.20[2]	0.82[3]	1.26[6]	2.20[6]
	16	0.00[2]	0.00[2]	0.35[2]	0.70[2]	1.50[3]	0.00[2]	0.00[2]	0.57[2]	0.98[3]	1.91[6]
	24	0.00[1]	0.00[1]	0.00[2]	0.262	1.05[2]	0.00[1]	0.00[2]	0.13[2]	0.51[2]	1.42[3]

NOTES:

1 Deflection exceeds L/120
2 Deflection exceeds L/240
3 Deflection exceeds L/360
6 Deflection exceeds L/600
7 Deflection exceeds L/720
Axial Load Multiplier = 1
Lateral Load Multiplier - Strength = 1
Lateral Load Multiplier - Deflection = 1.0

Allowable Combined Axial and Bending Loads 15psf lateral load

Wall	Spacing	362S137-mils (Fy)					362S162-mils (Fy)				
Ht. (ft)	(in) o.c.	-33 (33)	-43 (33)	-54 (50)	-68 (50)	-97 (50)	-33 (33)	-43 (33)	-54 (50)	-68 (50)	-97 (50)
8	12	1.09	1.72	2.95	3.98	5.78	1.44	2.20	3.74	4.96	7.50
	16	0.91	1.53	2.77	3.80	5.61	1.23	1.99	3.55	4.76	7.31
	24	0.56[7]	1.16	2.43	3.44	5.30	0.85	1.59	3.17	4.38	6.93
9	12	0.90	1.49	2.64	3.59	5.58	1.21	1.93	3.35	4.47	6.82
	16	0.68	1.26	2.43	3.37	5.37	0.97	1.68	3.12	4.23	6.58
	24	0.28[6]	0.83[7]	2.03	2.94	4.95	0.53[6]	1.21	2.68	3.77	6.13
10	12	0.70[7]	1.25	2.31	3.16	5.10	0.97	1.64	2.94	3.94	6.08
	16	0.46[6]	0.99[7]	2.07	2.91	4.84	0.71[7]	1.36	2.67	3.66	5.81
	24	0.02[3]	0.51[6]	1.62[6]	2.44[7]	4.35	0.23[6]	0.84[6]	2.18[7]	3.15	5.30
12	12	0.33[6]	0.78[6]	1.63[7]	2.30	3.80	0.53[6]	1.08[7]	2.10	2.88	4.58
	16	0.06[3]	0.48[6]	1.36[6]	2.02[7]	3.51	0.24[3]	0.76[6]	1.81[6]	2.58[7]	4.27
	24	0.00[2]	0.00[3]	0.89[3]	1.51[6]	2.99[6]	0.00[2]	0.20[3]	1.29[6]	2.03[6]	3.70[7]
14	12	0.03[3]	0.38[3]	1.08[6]	1.60[6]	2.74[7]	0.18[3]	0.61[6]	1.42[6]	2.03[6]	3.35
	16	0.00[2]	0.08[3]	0.82[3]	1.31[6]	2.45[6]	0.00[2]	0.29[3]	1.14[3]	1.73[6]	3.03[6]
	24	0.00[2]	0.00[2]	0.35[2]	0.82[3]	1.94[3]	0.00[2]	0.00[2]	0.64[2]	1.19[3]	2.48[6]
16	12	0.00[2]	0.09[2]	0.68[3]	1.07[3]	1.97[6]	0.00[2]	0.26[3]	0.93[3]	1.41[6]	2.44[6]
	16	0.00[2]	0.00[2]	0.42[2]	0.80[3]	1.69[3]	0.00[2]	0.00[2]	0.66[2]	1.12[3]	2.14[6]
	24	0.00[1]	0.00[1]	0.00[2]	0.34[2]	1.21[2]	0.00[1]	0.00[2]	0.19[2]	0.62[2]	1.62[3]

Wall	Spacing	362S200-mils (Fy)					362S250-mils (Fy)			
Ht. (ft)	(in) o.c.	-33 (33)	-43 (33)	-54 (50)	-68 (50)	-97 (50)	-43 (33)	-54 (50)	-68 (50)	-97 (50)
8	12	1.77	2.79	4.71	6.22	9.15	3.19	5.32	7.25	10.62
	16	1.55	2.56	4.49	6.01	8.95	2.95	5.08	7.01	10.41
	24	1.13	2.13	4.06	5.58	8.55	2.48	4.62	6.53	9.99
9	12	1.51	2.47	4.21	5.60	8.32	2.87	4.84	6.54	9.69
	16	1.25	2.19	3.94	5.34	8.07	2.57	4.55	6.24	9.43
	24	0.77[7]	1.68	3.44	4.84	7.59	2.01	4.00	5.68	8.92
10	12	1.25	2.13	3.69	4.95	7.44	2.51	4.33	5.79	8.71
	16	0.95	1.82	3.38	4.65	7.15	2.17	3.99	5.45	8.40
	24	0.42[6]	1.25[7]	2.83	4.09	6.60	1.54	3.37	4.82	7.82
12	12	0.74[6]	1.46	2.65	3.66	5.66	1.77	3.17	4.32	6.72
	16	0.41[6]	1.11[6]	2.32[7]	3.32	5.32	1.37[7]	2.79	3.93	6.35
	24	0.00[3]	0.49[6]	1.73[6]	2.72[6]	4.72	0.67[6]	2.12[6]	3.25[7]	5.69
14	12	0.32[3]	0.90[6]	1.82[6]	2.61[7]	4.19	1.12[6]	2.20[7]	3.11	5.03
	16	0.00[3]	0.54[3]	1.49[6]	2.28[6]	3.85[7]	0.71[6]	1.82[6]	2.72[7]	4.66
	24	0.00[2]	0.00[2]	0.92[3]	1.69[3]	3.24[6]	0.01[3]	1.17[3]	2.05[6]	3.99[6]
16	12	0.01[2]	0.46[3]	1.22[6]	1.85[6]	3.10[7]	0.61[3]	1.49[6]	2.22[6]	3.77
	16	0.00[2]	0.12[2]	0.91[3]	1.53[3]	2.77[6]	0.22[3]	1.14[3]	1.85[6]	3.41[6]
	24	0.00[1]	0.00[2]	0.38[2]	0.97[2]	2.20[3]	0.00[2]	0.53[2]	1.21[3]	2.77[6]

NOTES:

1 Deflection exceeds L/120
2 Deflection exceeds L/240
3 Deflection exceeds L/360
6 Deflection exceeds L/600
7 Deflection exceeds L/720
Axial Load Multiplier = 1
Lateral Load Multiplier - Strength = 1
Lateral Load Multiplier - Deflection = 1.0

Allowable Combined Axial and Bending Loads 15psf lateral load

Wall	Spacing	400S137-mils (Fy)					400S162-mils (Fy)				
Ht. (ft)	(in) o.c.	-33 (33)	-43 (33)	-54 (50)	-68 (50)	-97 (50)	-33 (33)	-43 (33)	-54 (50)	-68 (50)	-97 (50)
8	12	1.24	1.92	3.32	4.60	6.20	1.62	2.45	4.22	5.77	8.73
	16	1.06	1.74	3.14	4.41	6.05	1.42	2.25	4.04	5.57	8.54
	24	0.72	1.38	2.81	4.06	5.77	1.05	1.86	3.67	5.18	8.17
9	12	1.05	1.71	3.05	4.30	6.04	1.40	2.20	3.87	5.33	8.11
	16	0.84	1.49	2.83	4.07	5.84	1.17	1.95	3.64	5.08	7.87
	24	0.44[7]	1.06	2.43	3.63	5.47	0.73[7]	1.49	3.20	4.61	7.41
10	12	0.86	1.49	2.74	3.89	5.83	1.17	1.93	3.48	4.83	7.40
	16	0.62[7]	1.22	2.49	3.62	5.59	0.90	1.64	3.21	4.54	7.12
	24	0.17[6]	0.74[6]	2.03[7]	3.11	5.12	0.41[6]	1.12[7]	2.70	3.99	6.58
12	12	0.48[6]	1.01[7]	2.08	2.99	4.90	0.72[7]	1.37	2.65	3.73	5.87
	16	0.19[6]	0.70[6]	1.78[7]	2.67	4.57	0.41[6]	1.03[6]	2.33[7]	3.38	5.52
	24	0.00[3]	0.14[3]	1.25[6]	2.09[6]	3.98[7]	0.00[3]	0.43[6]	1.75[6]	2.76[6]	4.88
14	12	0.15[3]	0.58[6]	1.46[6]	2.15[7]	3.64	0.33[6]	0.86[6]	1.89[6]	2.70	4.40
	16	0.00[3]	0.25[3]	1.15[6]	1.82[6]	3.30[7]	0.01[3]	0.50[6]	1.56[6]	2.35[6]	4.04
	24	0.00[2]	0.00[2]	0.62[3]	1.24[3]	2.70[6]	0.00[2]	0.00[3]	0.98[3]	1.72[6]	3.40[6]
16	12	0.00[2]	0.23[3]	0.97[3]	1.49[6]	2.66[6]	0.03[3]	0.44[3]	1.30[6]	1.92[6]	3.26[7]
	16	0.00[2]	0.00[2]	0.67[3]	1.17[3]	2.34[6]	0.00[2]	0.09[3]	0.98[3]	1.58[6]	2.91[6]
	24	0.00[1]	0.00[2]	0.16[2]	0.62[2]	1.77[3]	0.00[2]	0.00[2]	0.42[2]	0.98[3]	2.30[3]

Wall	Spacing	400S200-mils (Fy)					400S250-mils (Fy)			
	Ht. (ft)	(in) o.c.	-33 (33)	-43 (33)	-54 (50)	-68 (50)	-97 (50)	-43 (33)	-54 (50)	-68 (50)
8	12	1.97	3.10	5.32	7.19	10.65	3.48	5.81	8.19	12.36
	16	1.76	2.88	5.10	6.97	10.45	3.25	5.59	7.95	12.15
	24	1.35	2.46	4.68	6.55	10.06	2.81	5.16	7.49	11.73
9	12	1.73	2.80	4.86	6.63	9.87	3.19	5.44	7.65	11.47
	16	1.47	2.53	4.59	6.36	9.62	2.90	5.16	7.35	11.21
	24	0.99	2.03	4.09	5.84	9.14	2.36	4.62	6.78	10.70
10	12	1.47	2.48	4.36	6.01	9.01	2.86	4.98	7.01	10.51
	16	1.18	2.17	4.05	5.69	8.71	2.52	4.64	6.65	10.19
	24	0.64[7]	1.59	3.47	5.09	8.14	1.90	4.02	5.98	9.59
12	12	0.96[7]	1.81	3.33	4.69	7.19	2.17	3.95	5.50	8.47
	16	0.61[6]	1.44[7]	2.96	4.31	6.82	1.75	3.54	5.07	8.07
	24	0.00[3]	0.78[6]	2.31[6]	3.62[7]	6.14	1.01[6]	2.80[7]	4.29	7.33
14	12	0.50[6]	1.21[6]	2.39[7]	3.44	5.45	1.48[7]	2.87	4.07	6.51
	16	0.14[3]	0.81[6]	2.01[6]	3.05[7]	5.06	1.03[6]	2.44[7]	3.62	6.08
	24	0.00[2]	0.13[3]	1.36[3]	2.36[6]	4.37[6]	0.26[3]	1.69[6]	2.83[6]	5.31[7]
16	12	0.14[3]	0.71[6]	1.67[6]	2.48[6]	4.09	0.90[6]	2.01[6]	2.95[7]	4.93
	16	0.00[2]	0.32[3]	1.30[3]	2.10[6]	3.71[6]	0.46[3]	1.60[6]	2.52[6]	4.51[7]
	24	0.00[2]	0.00[2]	0.68[2]	1.45[3]	3.04[6]	0.00[2]	0.89[3]	1.77[3]	3.76[6]

NOTES:

1 Deflection exceeds L/120
2 Deflection exceeds L/240
3 Deflection exceeds L/360
6 Deflection exceeds L/600
7 Deflection exceeds L/720
Axial Load Multiplier = 1
Lateral Load Multiplier - Strength = 1
Lateral Load Multiplier - Deflection = 1.0

Allowable Combined Axial and Bending Loads 15psf lateral load

Wall	Spacing	550S137-mils (Fy)					550S162-mils (Fy)				
Ht. (ft)	(in) o.c.	-33 (33)	-43 (33)	-54 (50)	-68 (50)	-97 (50)	-33 (33)	-43 (33)	-54 (50)	-68 (50)	-97 (50)
8	12	1.51	2.29	3.66	4.91	7.35	2.08	3.09	5.36	7.19	11.06
	16	1.39	2.17	3.56	4.81	7.25	1.93	2.95	5.22	7.06	10.93
	24	1.13	1.94	3.36	4.62	7.07	1.64	2.68	4.96	6.80	10.67
9	12	1.40	2.19	3.57	4.82	7.26	1.94	2.94	5.20	7.07	10.93
	16	1.24	2.04	3.44	4.70	7.14	1.75	2.77	5.03	6.90	10.76
	24	0.93	1.75	3.19	4.45	6.90	1.38	2.42	4.69	6.56	10.42
10	12	1.28	2.07	3.46	4.71	7.15	1.77	2.77	4.97	6.90	10.77
	16	1.08	1.88	3.30	4.56	7.00	1.54	2.56	4.76	6.69	10.55
	24	0.70	1.53	2.98	4.25	6.69	1.10	2.14	4.35	6.26	10.11
12	12	0.99	1.79	3.20	4.45	6.88	1.39	2.36	4.40	6.22	10.30
	16	0.72	1.53	2.96	4.21	6.64	1.08	2.07	4.10	5.91	9.96
	24	0.22[6]	1.04[7]	2.51	3.76	6.18	0.52[7]	1.51	3.54	5.32	9.29
14	12	0.67[7]	1.46	2.86	4.09	6.50	0.97	1.90	3.71	5.36	9.00
	16	0.34[6]	1.12[7]	2.54	3.77	6.16	0.61[6]	1.53	3.34	4.97	8.55
	24	0.00[3]	0.52[6]	1.95[6]	3.16[7]	5.52	0.00[6]	0.86[6]	2.66[7]	4.24	7.72
16	12	0.33[6]	1.06[7]	2.36	3.61	5.98	0.58[6]	1.42[7]	2.98	4.42	7.55
	16	0.00[3]	0.68[6]	1.99[6]	3.21[7]	5.54	0.18[6]	1.00[6]	2.57[7]	3.97	7.03
	24	0.00[2]	0.01[3]	1.33[6]	2.49[6]	4.74[7]	0.00[3]	0.28[3]	1.83[6]	3.18[6]	6.10[7]

NOTES:

1 Deflection exceeds L/120
2 Deflection exceeds L/240
3 Deflection exceeds L/360
6 Deflection exceeds L/600
7 Deflection exceeds L/720
Axial Load Multiplier = 1
Lateral Load Multiplier - Strength = 1
Lateral Load Multiplier - Deflection = 1.0

Allowable Combined Axial and Bending Loads 15psf lateral load

Wall	Spacing	600S137-mils (Fy)					600S162-mils (Fy)				
Ht. (ft)	(in) o.c.	-33 (33)	-43 (33)	-54 (50)	-68 (50)	-97 (50)	-33 (33)	-43 (33)	-54 (50)	-68 (50)	-97 (50)
8	12	1.54	2.28	3.62	4.86	7.38	2.14	3.14	5.37	7.22	11.17
	16	1.42	2.17	3.53	4.77	7.30	2.00	3.02	5.25	7.10	11.06
	24	1.19	1.95	3.34	4.58	7.14	1.73	2.77	5.02	6.87	10.83
9	12	1.44	2.18	3.54	4.78	7.31	2.02	3.03	5.26	7.11	11.06
	16	1.29	2.04	3.41	4.66	7.21	1.85	2.87	5.11	6.96	10.91
	24	1.01	1.76	3.17	4.42	7.00	1.51	2.56	4.81	6.67	10.62
10	12	1.33	2.07	3.44	4.68	7.22	1.89	2.91	5.14	6.98	10.93
	16	1.15	1.90	3.28	4.53	7.09	1.67	2.71	4.94	6.79	10.74
	24	0.80	1.55	2.98	4.23	6.83	1.26	2.32	4.57	6.42	10.37
12	12	1.07	1.81	3.20	4.44	7.00	1.54	2.56	4.76	6.66	10.59
	16	0.82	1.56	2.97	4.21	6.80	1.25	2.28	4.48	6.37	10.29
	24	0.35[7]	1.08	2.54	3.78	6.41	0.70	1.75	3.94	5.82	9.73
14	12	0.78	1.50	2.89	4.12	6.70	1.15	2.13	4.15	5.95	10.05
	16	0.46[7]	1.17	2.59	3.81	6.42	0.79	1.78	3.78	5.58	9.63
	24	0.00[6]	0.57[6]	2.02[7]	3.22	5.87	0.14[6]	1.12[7]	3.11	4.87	8.83
16	12	0.46[6]	1.16	2.53	3.73	6.31	0.75[7]	1.67	3.45	5.08	8.73
	16	0.09[6]	0.76[6]	2.15[7]	3.33	5.92	0.35[6]	1.26[7]	3.03	4.63	8.21
	24	0.00[3]	0.05[6]	1.47[6]	2.61[6]	5.21	0.00[3]	0.51[6]	2.28[6]	3.82[7]	7.28

Wall	Spacing	600S200-mils (Fy)					600S250-mils (Fy)			
Ht. (ft)	(in) o.c.	-33 (33)	-43 (33)	-54 (50)	-68 (50)	-97 (50)	-43 (33)	-54 (50)	-68 (50)	-97 (50)
8	12	2.57	4.01	7.16	9.69	15.37	4.34	7.35	10.74	17.96
	16	2.43	3.86	7.01	9.55	15.23	4.19	7.21	10.58	17.81
	24	2.15	3.56	6.71	9.27	14.95	3.89	6.92	10.27	17.50
9	12	2.43	3.84	6.92	9.43	15.02	4.17	7.13	10.44	17.51
	16	2.26	3.65	6.73	9.25	14.84	3.98	6.95	10.24	17.31
	24	1.90	3.27	6.35	8.89	14.48	3.60	6.58	9.84	16.91
10	12	2.28	3.65	6.65	9.12	14.60	3.98	6.88	10.09	16.97
	16	2.06	3.41	6.41	8.89	14.37	3.74	6.65	9.84	16.72
	24	1.63	2.96	5.94	8.45	13.91	3.28	6.20	9.35	16.22
12	12	1.91	3.19	5.96	8.33	13.52	3.53	6.25	9.24	15.63
	16	1.60	2.86	5.63	8.00	13.16	3.19	5.93	8.88	15.26
	24	1.03	2.24	4.98	7.37	12.50	2.55	5.29	8.18	14.53
14	12	1.49	2.65	5.14	7.34	12.10	3.00	5.53	8.23	13.99
	16	1.11	2.24	4.71	6.92	11.64	2.57	5.10	7.75	13.49
	24	0.42[6]	1.48	3.92	6.12	10.77	1.76	4.30	6.85	12.53
16	12	1.05	2.09	4.25	6.25	10.49	2.43	4.78	7.14	12.16
	16	0.62[6]	1.62	3.76	5.75	9.94	1.92	4.26	6.56	11.55
	24	0.00[6]	0.76[6]	2.88[7]	4.84	8.92	1.00[6]	3.32[7]	5.51	10.43

NOTES:

1 Deflection exceeds L/120
2 Deflection exceeds L/240
3 Deflection exceeds L/360
6 Deflection exceeds L/600
7 Deflection exceeds L/720
Axial Load Multiplier = 1
Lateral Load Multiplier - Strength = 1
Lateral Load Multiplier - Deflection = 1.0

Allowable Combined Axial and Bending Loads 15psf lateral load

Wall	Spacing	800S137-mils (Fy)					800S162-mils (Fy)				
Ht. (ft)	(in) o.c.	-33 (33)	-43 (33)	-54 (50)	-68 (50)	-97 (50)	-33 (33)	-43 (33)	-54 (50)	-68 (50)	-97 (50)
8	12	1.55	2.27	3.14	4.62	7.10	2.20	3.17	5.26	7.08	11.09
	16	1.46	2.19	3.38	4.56	7.04	2.10	3.07	5.18	7.00	11.01
	24	1.30	2.03	3.25	4.44	6.93	1.90	2.89	5.01	6.83	10.85
9	12	1.48	2.20	3.39	4.57	7.05	2.12	3.09	5.19	7.01	11.02
	16	1.37	2.10	3.31	4.49	6.98	1.99	2.97	5.08	6.90	10.92
	24	1.17	1.91	3.14	4.34	6.83	1.75	2.73	4.87	6.69	10.71
10	12	1.40	2.13	3.33	4.51	6.99	2.02	3.00	5.11	6.93	10.94
	16	1.27	2.01	3.22	4.42	6.90	1.87	2.85	4.97	6.80	10.81
	24	1.02	1.76	3.02	4.22	6.72	1.57	2.56	4.70	6.53	10.55
12	12	1.22	1.96	3.18	4.37	6.86	1.81	2.79	4.91	6.73	10.74
	16	1.04	1.78	3.03	4.23	6.72	1.59	2.57	4.71	6.53	10.55
	24	0.68	1.43	2.74	3.95	6.45	1.16	2.15	4.31	6.14	10.16
14	12	1.01	1.75	3.00	4.20	6.69	1.55	2.53	4.65	6.48	10.48
	16	0.77	1.51	2.80	4.00	6.50	1.25	2.24	4.38	6.20	10.20
	24	0.29	1.04	2.40	3.61	6.12	0.69	1.68	3.84	5.66	9.65
16	12	0.77	1.51	2.79	3.99	6.48	1.25	2.23	4.35	6.16	10.14
	16	0.46	1.20	2.53	3.73	6.22	0.88	1.86	3.98	5.80	9.77
	24	0.00[6]	0.61	2.02	3.22	5.73	0.19[7]	1.15	3.29	5.09	9.03

Wall	Spacing	800S200-mils (Fy)					800S250-mils (Fy)			
Ht. (ft)	(in) o.c.	-33 (33)	-43 (33)	-54 (50)	-68 (50)	-97 (50)	-43 (33)	-54 (50)	-68 (50)	-97 (50)
8	12	2.75	4.25	7.53	10.09	15.79	4.67	7.96	11.57	19.55
	16	2.65	4.14	7.42	9.99	15.70	4.55	7.85	11.46	19.44
	24	2.44	3.93	7.21	9.80	15.51	4.33	7.63	11.23	19.21
9	12	2.67	4.16	7.44	10.00	15.71	4.56	7.83	11.43	19.36
	16	2.53	4.02	7.30	9.88	15.59	4.41	7.69	11.28	19.22
	24	2.27	3.74	7.02	9.63	15.35	4.13	7.42	10.99	18.93
10	12	2.57	4.06	7.33	9.90	15.61	4.43	7.68	11.26	19.14
	16	2.40	3.88	7.15	9.75	15.46	4.25	7.51	11.08	18.96
	24	2.07	3.54	6.81	9.43	15.16	3.90	7.17	10.71	18.60
12	12	2.33	3.80	7.06	9.66	15.37	4.13	7.30	10.84	18.57
	16	2.09	3.55	6.81	9.42	15.14	3.87	7.05	10.57	18.30
	24	1.63	3.05	6.30	8.95	14.68	3.37	6.56	10.03	17.76
14	12	2.03	3.45	6.63	9.27	15.04	3.76	6.82	10.22	17.69
	16	1.71	3.11	6.28	8.94	14.71	3.42	6.48	9.85	17.31
	24	1.10	2.46	5.59	8.29	14.05	2.74	5.82	9.12	16.56
16	12	1.68	3.02	6.00	8.55	14.22	3.33	6.24	9.42	16.46
	16	1.28	2.59	5.55	8.12	13.78	2.89	5.81	8.94	15.96
	24	0.54	1.79	4.71	7.30	12.92	2.06	4.98	8.03	15.00

NOTES:

1 Deflection exceeds L/120
2 Deflection exceeds L/240
3 Deflection exceeds L/360
6 Deflection exceeds L/600
7 Deflection exceeds L/720
Axial Load Multiplier = 1
Lateral Load Multiplier - Strength = 1
Lateral Load Multiplier - Deflection = 1.0

Allowable Combined Axial and Bending Loads 15psf lateral load

Wall	Spacing	1000S162-mils (Fy)				1000S200-mils (Fy)				1000S250-mils (Fy)			
Ht. (ft)	(in) o.c.	-43 (33)	-54 (50)	-68 (50)	-97 (50)	-43 (33)	-54 (50)	-68 (50)	-97 (50)	-43 (33)	-54 (50)	-68 (50)	-97 (50)
8	12	3.13	5.07	6.83	10.74	4.27	7.43	9.94	15.62	4.78	8.10	11.74	19.74
	16	3.06	5.01	6.77	10.68	4.18	7.35	9.86	15.55	4.69	8.01	11.65	19.65
	24	2.91	4.88	6.64	10.57	4.01	7.19	9.71	15.39	4.51	7.84	11.47	19.48
9	12	3.07	5.02	6.78	10.69	4.20	7.37	9.88	15.56	4.70	8.03	11.66	19.67
	16	2.98	4.94	6.70	10.62	4.09	7.26	9.78	15.46	4.59	7.92	11.55	19.56
	24	2.79	4.77	6.54	10.47	3.87	7.05	9.57	15.27	4.36	7.70	11.32	19.34
10	12	3.00	4.96	6.72	10.64	4.12	7.29	9.80	15.48	4.62	7.95	11.58	19.58
	16	2.89	4.86	6.62	10.54	3.98	7.16	9.68	15.36	4.48	7.81	11.44	19.45
	24	2.66	4.65	6.43	10.36	3.71	6.90	9.42	15.12	4.20	7.54	11.16	19.18
12	12	2.84	4.82	6.58	10.53	3.93	7.10	9.62	15.31	4.42	7.75	11.37	19.38
	16	2.68	4.67	6.44	10.37	3.73	6.91	9.43	15.12	4.22	7.56	11.16	19.18
	24	2.35	4.37	6.15	10.09	3.35	6.53	9.06	14.76	3.81	7.16	10.75	18.78
14	12	2.65	4.64	6.41	10.34	3.70	6.87	9.39	15.08	4.16	7.48	11.09	19.12
	16	2.42	4.44	6.21	10.14	3.43	6.60	9.13	14.82	3.88	7.20	10.80	18.84
	24	1.98	4.03	5.82	9.76	2.91	6.08	8.62	14.32	3.33	6.67	10.23	18.27
16	12	2.43	4.43	6.20	10.13	3.43	6.59	9.11	14.80	3.84	7.08	10.64	18.59
	16	2.13	4.16	5.94	9.87	3.08	6.23	8.77	14.45	3.48	6.72	10.25	18.20
	24	1.55	3.63	5.42	9.36	2.40	5.54	8.09	13.77	2.77	6.03	9.50	17.45

Wall	Spacing	1200S162-mils (Fy)			1200S200-mils (Fy)			1200S250-mils (Fy)		
Ht. (ft)	(in) o.c.	-54 (50)	-68 (50)	-97 (50)	-54 (50)	-68 (50)	-97 (50)	-54 (50)	-68 (50)	-97 (50)
8	12	4.85	6.53	10.28	6.57	9.54	15.34	7.57	10.97	19.35
	16	4.80	6.48	10.24	6.51	9.47	15.28	7.50	10.91	19.28
	24	4.69	6.38	10.15	6.39	9.35	15.16	7.38	10.77	19.13
9	12	4.81	6.49	10.25	6.52	9.48	15.29	7.52	10.92	19.29
	16	4.74	6.42	10.19	6.45	9.41	15.21	7.44	10.83	19.20
	24	4.61	6.30	10.07	6.30	9.25	15.06	7.27	10.66	19.01
10	12	4.76	6.44	10.20	6.47	9.43	15.23	7.46	10.85	19.22
	16	4.68	6.36	10.13	6.38	9.33	15.14	7.36	10.75	19.11
	24	4.51	6.21	9.99	6.19	9.13	14.95	7.16	10.53	18.88
12	12	4.65	6.33	10.10	6.35	9.29	15.10	7.33	10.71	19.06
	16	4.53	6.22	10.00	6.21	9.14	14.96	7.19	10.55	18.89
	24	4.29	6.00	9.79	5.95	8.86	14.68	6.99	10.24	18.56
14	12	4.51	6.20	9.98	6.20	9.12	14.93	7.17	10.52	18.86
	16	4.35	6.05	9.83	6.02	8.92	14.74	6.98	10.31	18.62
	24	4.02	5.74	9.54	5.66	8.52	14.35	6.59	9.88	18.16
16	12	4.35	6.05	9.83	6.04	8.92	14.73	6.99	10.30	18.61
	16	4.13	5.84	9.64	5.80	8.65	14.47	6.74	10.02	18.30
	24	3.70	5.43	9.25	5.33	8.13	13.95	6.23	9.45	17.67

NOTES:

1 Deflection exceeds L/120
2 Deflection exceeds L/240
3 Deflection exceeds L/360
6 Deflection exceeds L/600
7 Deflection exceeds L/720
Axial Load Multiplier = 1
Lateral Load Multiplier - Strength = 1
Lateral Load Multiplier - Deflection = 1.0

Allowable Combined Axial and Bending Loads 20psf lateral load

Wall	Spacing	250S137-mils (Fy)					250S162-mils (Fy)				
Ht. (ft)	(in) o.c.	-33 (33)	-43 (33)	-54 (50)	-68 (50)	-97 (50)	-33 (33)	-43 (33)	-54 (50)	-68 (50)	-97 (50)
8	12	0.37[6]	0.79[6]	1.43[7]	2.03	3.35	0.56[6]	1.06[7]	1.80	2.47	3.90
	16	0.16[3]	0.57[6]	1.25[6]	1.84[7]	3.11	0.32[6]	0.83[6]	1.60[7]	2.26	3.66
	24	0.00[2]	0.19[3]	0.92[3]	1.48[6]	2.66[6]	0.00[3]	0.40[3]	1.24[6]	1.87[6]	3.21[7]
9	12	0.18[3]	0.54[6]	1.14[6]	1.64[6]	2.70	0.33[6]	0.77[6]	1.44[6]	2.01[7]	3.19
	16	0.00[2]	0.32[3]	0.94[6]	1.43[6]	2.44[6]	0.09[3]	0.52[3]	1.23[6]	1.78[6]	2.93[7]
	24	0.00[2]	0.00[2]	0.60[3]	1.06[3]	1.99[6]	0.00[2]	0.09[2]	0.86[3]	1.38[3]	2.46[6]
10	12	0.02[2]	0.34[3]	0.88[3]	1.30[6]	2.15[6]	0.14[3]	0.52[3]	1.13[6]	1.61[6]	2.59[7]
	16	0.00[2]	0.11[2]	0.68[3]	1.09[3]	1.90[6]	0.00[2]	0.27[3]	0.91[3]	1.38[6]	2.32[6]
	24	0.00[1]	0.00[2]	0.33[2]	0.71[2]	1.45[3]	0.00[2]	0.00[2]	0.54[2]	0.98[3]	1.86[3]
12	12	0.00[2]	0.03[2]	0.48[2]	0.78[3]	1.35[3]	0.00[2]	0.15[2]	0.65[3]	1.00[3]	1.68[6]
	16	0.00[1]	0.00[2]	0.28[2]	0.57[2]	1.11[3]	0.00[1]	0.00[2]	0.44[2]	0.78[2]	1.43[3]
	24	0.00[1]	0.00[1]	0.00[1]	0.22[2]	0.70[2]	0.00[1]	0.00[1]	0.09[2]	0.39[2]	0.99[2]
14	12	0.00[1]	0.00[1]	0.21[2]	0.43[2]	0.83[2]	0.00[1]	0.00[2]	0.33[2]	0.59[2]	1.08[3]
	16	0.00[1]	0.00[1]	0.03[1]	0.24[1]	0.62[2]	0.00[1]	0.00[1]	0.14[1]	0.38[2]	0.84[2]
	24	0.00[1]	0.00[1]	0.00[1]	0.00[1]	0.25[1]	0.00[1]	0.00[1]	0.00[1]	0.03[1]	0.44[2]
16	12	0.00[1]	0.00[1]	0.04[1]	0.20[1]	0.49[2]	0.00[1]	0.00[1]	0.12[1]	0.32[2]	0.68[2]
	16	0.00[1]	0.00[1]	0.00[1]	0.03[1]	0.30[1]	0.00[1]	0.00[1]	0.00[1]	0.13[1]	0.46[2]
	24	0.00[1]	0.00[1]	0.00[1]	0.00[1]	0.00[1]	0.00[1]	0.00[1]	0.00[1]	0.00[1]	0.10[1]

Wall	Spacing	350S137-mils (Fy)					350S162-mils (Fy)				
Ht. (ft)	(in) o.c.	-33 (33)	-43 (33)	-54 (50)	-68 (50)	-97 (50)	-33 (33)	-43 (33)	-54 (50)	-68 (50)	-97 (50)
8	12	0.85	1.45	2.61	3.56	5.46	1.16	1.89	3.36	4.46	6.88
	16	0.62	1.20	2.38	3.32	5.23	0.90	1.62	3.11	4.21	6.63
	24	0.18[6]	0.73[7]	1.96	2.87	4.80	0.43[6]	1.11[7]	2.64	3.72	6.15
9	12	0.62[7]	1.18	2.25	3.13	5.14	0.90	1.57	2.91	3.92	6.14
	16	0.36[6]	0.89[7]	1.99	2.85	4.85	0.60[6]	1.26	2.62	3.62	5.84
	24	0.00[3]	0.36[6]	1.51[6]	2.33[7]	4.31	0.07[6]	0.69[6]	2.08[7]	3.06	5.28
10	12	0.40[6]	0.91[7]	1.89	2.67	4.47	0.64[6]	1.25	2.45	3.37	5.37
	16	0.11[6]	0.59[6]	1.60[6]	2.36[7]	4.15	0.32[6]	0.91[6]	2.14[7]	3.03	5.03
	24	0.00[3]	0.02[3]	1.08[6]	1.80[6]	3.56[7]	0.00[3]	0.29[6]	1.56[6]	2.43[6]	4.41
12	12	0.02[3]	0.41[6]	1.22[6]	1.82[6]	3.18	0.18[3]	0.67[6]	1.62[6]	2.33[7]	3.88
	16	0.00[2]	0.07[3]	0.91[3]	1.49[6]	2.84[6]	0.00[3]	0.30[3]	1.29[6]	1.97[6]	3.51[7]
	24	0.00[2]	0.00[2]	0.38[2]	0.91[3]	2.23[6]	0.00[2]	0.00[2]	0.70[3]	1.35[3]	2.86[6]
14	12	0.00[2]	0.04[2]	0.71[3]	1.16[3]	2.20[6]	0.00[2]	0.22[3]	1.00[3]	1.54[6]	2.73[6]
	16	0.00[2]	0.00[2]	0.41[2]	0.84[3]	1.87[3]	0.00[2]	0.00[2]	0.68[3]	1.20[3]	2.37[6]
	24	0.00[1]	0.00[1]	0.00[2]	0.29[2]	1.29[2]	0.00[1]	0.00[2]	0.13[2]	0.98[3]	1.91[6]
16	12	0.00[2]	0.00[2]	0.35[2]	0.70[2]	1.50[3]	0.00[2]	0.00[2]	0.57[2]	0.98[3]	1.91[6]
	16	0.00[1]	0.00[1]	0.07[2]	0.40[2]	1.19[2]	0.00[1]	0.00[2]	0.26[2]	0.66[2]	1.58[3]
	24	0.00[1]	0.00[1]	0.00[1]	0.00[1]	0.66[2]	0.00[1]	0.00[1]	0.00[1]	0.11[2]	0.99[2]

NOTES:

1 Deflection exceeds L/120
2 Deflection exceeds L/240
3 Deflection exceeds L/360
6 Deflection exceeds L/600
7 Deflection exceeds L/720
Axial Load Multiplier = 1
Lateral Load Multiplier - Strength = 1
Lateral Load Multiplier - Deflection = 1.0

Allowable Combined Axial and Bending Loads 20psf lateral load

Wall	Spacing	362S137-mils (Fy)					362S162-mils (Fy)				
Ht. (ft)	(in) o.c.	-33 (33)	-43 (33)	-54 (50)	-68 (50)	-97 (50)	-33 (33)	-43 (33)	-54 (50)	-68 (50)	-97 (50)
8	12	0.91	1.53	2.77	3.80	5.61	1.23	1.99	3.55	4.76	7.31
	16	0.67	1.28	2.54	3.56	5.40	0.98	1.72	3.30	4.50	7.06
	24	0.24[6]	0.81[7]	2.11	3.10	4.99	0.50[7]	1.21	2.82	4.01	6.57
9	12	0.68	1.26	2.43	3.37	5.37	0.97	1.68	3.12	4.23	6.58
	16	0.41[6]	0.97[7]	2.16	3.08	5.09	0.67[7]	1.36	2.82	3.92	6.28
	24	0.00[6]	0.44[6]	1.66[6]	2.55[7]	4.56	0.13[6]	0.78[6]	2.27[7]	3.34	5.71
10	12	0.46[6]	0.99[7]	2.07	2.91	4.84	0.71[7]	1.36	2.67	3.66	5.81
	16	0.16[6]	0.66[6]	1.77[7]	2.59	4.51	0.38[6]	1.01[6]	2.34	3.32	5.46
	24	0.00[3]	0.09[3]	1.22[6]	2.01[6]	3.91[7]	0.00[3]	0.38[6]	1.74[6]	2.69[7]	4.82
12	12	0.06[3]	0.48[6]	1.36[6]	2.02[7]	3.51	0.24[3]	0.76[6]	1.81[6]	2.58[7]	4.27
	16	0.00[2]	0.13[3]	1.04[6]	1.67[6]	3.15[6]	0.00[3]	0.38[3]	1.45[6]	2.20[6]	3.88[7]
	24	0.00[2]	0.00[2]	0.48[3]	1.06[3]	2.52[6]	0.00[2]	0.00[2]	0.84[3]	1.55[3]	3.20[6]
14	12	0.00[2]	0.08[3]	0.82[3]	1.31[6]	2.45[6]	0.00[2]	0.29[3]	1.14[3]	1.73[6]	3.03[6]
	16	0.00[2]	0.00[2]	0.50[2]	0.97[3]	2.10[6]	0.00[2]	0.00[2]	0.79[3]	1.36[3]	2.66[6]
	24	0.00[1]	0.00[2]	0.00[2]	0.39[2]	1.49[3]	0.00[1]	0.00[2]	0.21[2]	0.73[2]	2.00[3]
16	12	0.00[2]	0.00[2]	0.42[2]	0.80[3]	1.69[3]	0.00[2]	0.00[2]	0.66[2]	1.12[3]	2.14[6]
	16	0.00[1]	0.00[2]	0.13[2]	0.49[2]	1.36[3]	0.00[1]	0.00[2]	0.34[2]	0.77[2]	1.78[3]
	24	0.00[1]	0.00[1]	0.00[1]	0.00[2]	0.80[2]	0.00[1]	0.00[1]	0.00[2]	0.19[2]	1.17[2]

Wall	Spacing	362S200-mils (Fy)					362S250-mils (Fy)			
Ht. (ft)	(in) o.c.	-33 (33)	-43 (33)	-54 (50)	-68 (50)	-97 (50)	-43 (33)	-54 (50)	-68 (50)	-97 (50)
8	12	1.55	2.56	4.49	6.01	8.95	2.95	5.08	7.01	10.41
	16	1.27	2.27	4.20	5.72	8.68	2.63	4.77	6.69	10.13
	24	0.74[7]	1.71	3.65	5.18	8.17	2.03	4.19	6.08	9.59
9	12	1.25	2.19	3.94	5.34	8.07	2.57	4.55	6.24	9.43
	16	0.92	1.85	3.60	5.00	7.75	2.19	4.18	5.86	9.09
	24	0.32[6]	1.21[7]	2.97	4.37	7.14	1.49	3.49	5.15	8.44
10	12	0.95	1.82	3.38	4.65	7.15	2.17	3.99	5.45	8.40
	16	0.59[6]	1.43[7]	3.00	4.27	6.78	1.74	3.57	5.02	8.01
	24	0.00[6]	0.74[6]	2.32[6]	3.58[7]	6.10	0.97[6]	2.81[7]	4.24	7.28
12	12	0.41[6]	1.11[6]	2.32[7]	3.32	5.32	1.37[7]	2.79	3.93	6.35
	16	0.01[3]	0.69[6]	1.92[6]	2.91[7]	4.91	0.89[6]	2.33[6]	3.47	5.91
	24	0.00[2]	0.00[3]	1.21[3]	2.19[6]	4.17[6]	0.06[3]	1.53[6]	2.64[6]	5.10[7]
14	12	0.00[3]	0.54[3]	1.49[6]	2.28[6]	3.85[7]	0.71[6]	1.82[6]	2.72[7]	4.66
	16	0.00[2]	0.12[3]	1.10[3]	1.88[6]	3.44[6]	0.23[3]	1.38[6]	2.26[6]	4.20[7]
	24	0.00[2]	0.00[2]	0.43[2]	1.18[3]	2.71[3]	0.00[2]	0.61[3]	1.46[3]	3.40[6]
16	12	0.00[2]	0.12[2]	0.91[3]	1.53[3]	2.77[6]	0.22[3]	1.14[3]	1.85[6]	3.41[6]
	16	0.00[2]	0.00[2]	0.54[2]	1.15[3]	2.38[3]	0.00[2]	0.72[3]	1.41[3]	2.97[6]
	24	0.00[1]	0.00[1]	0.00[2]	0.50[2]	1.70[2]	0.00[2]	0.00[2]	0.66[2]	2.21[3]

NOTES:

1 Deflection exceeds L/120
2 Deflection exceeds L/240
3 Deflection exceeds L/360
6 Deflection exceeds L/600
7 Deflection exceeds L/720
Axial Load Multiplier = 1
Lateral Load Multiplier - Strength = 1
Lateral Load Multiplier - Deflection = 1.0

Allowable Combined Axial and Bending Loads 20psf lateral load

Wall	Spacing	400S137-mils (Fy)					400S162-mils (Fy)				
Ht. (ft)	(in) o.c.	-33 (33)	-43 (33)	-54 (50)	-68 (50)	-97 (50)	-33 (33)	-43 (33)	-54 (50)	-68 (50)	-97 (50)
8	12	1.06	1.74	3.14	4.41	6.05	1.42	2.25	4.04	5.57	8.54
	16	0.83	1.50	2.92	4.18	5.86	1.17	1.99	3.79	5.31	8.30
	24	0.40[7]	1.04	2.50	3.72	5.49	0.70	1.50	3.32	4.81	7.82
9	12	0.84	1.49	2.83	4.07	5.84	1.17	1.95	3.64	5.08	7.87
	16	0.57[7]	1.20	2.56	3.77	5.60	0.87	1.64	3.34	4.76	7.56
	24	0.07[6]	0.67[6]	2.06	3.21	5.12	0.33[6]	1.07[7]	2.78	4.16	6.98
10	12	0.62[7]	1.22	2.49	3.62	5.59	0.90	1.64	3.21	4.54	7.12
	16	0.31[6]	0.89[7]	2.18	3.28	5.27	0.57[6]	1.29	2.87	4.17	6.75
	24	0.00[3]	0.30[6]	1.61[6]	2.65[7]	4.68	0.00[6]	0.64[6]	2.24[7]	3.48	6.08
12	12	0.19[6]	0.70[6]	1.78[7]	2.67	4.57	0.41[6]	1.03[6]	2.33[7]	3.38	5.52
	16	0.00[3]	0.32[6]	1.42[6]	2.27[6]	4.17	0.04[3]	0.62[6]	1.94[6]	2.96[7]	5.09
	24	0.00[2]	0.00[3]	0.79[3]	1.58[6]	3.45[6]	0.00[2]	0.00[3]	1.25[3]	2.20[6]	4.32[6]
14	12	0.00[3]	0.25[3]	1.15[6]	1.82[6]	3.30[7]	0.01[3]	0.50[6]	1.56[6]	2.35[6]	4.04
	16	0.00[2]	0.00[2]	0.79[3]	1.42[3]	2.90[6]	0.00[2]	0.08[3]	1.16[3]	1.92[6]	3.60[6]
	24	0.00[2]	0.00[2]	0.16[2]	0.73[2]	2.19[3]	0.00[2]	0.00[2]	0.48[2]	1.18[3]	2.84[6]
16	12	0.00[2]	0.00[2]	0.67[3]	1.17[3]	2.34[6]	0.00[2]	0.09[3]	0.98[3]	1.58[6]	2.91[6]
	16	0.00[2]	0.00[2]	0.32[2]	0.80[3]	1.95[3]	0.00[2]	0.00[2]	0.60[2]	1.17[3]	2.49[6]
	24	0.00[1]	0.00[1]	0.00[2]	0.15[2]	1.29[2]	0.00[1]	0.00[2]	0.00[2]	0.48[2]	1.77[3]

Wall	Spacing	400S200-mils (Fy)					400S250-mils (Fy)			
Ht. (ft)	(in) o.c.	-33 (33)	-43 (33)	-54 (50)	-68 (50)	-97 (50)	-43 (33)	-54 (50)	-68 (50)	-97 (50)
8	12	1.76	2.88	5.10	6.97	10.45	3.25	5.59	7.95	12.15
	16	1.48	2.60	4.82	6.69	10.19	2.95	5.30	7.64	11.87
	24	0.97	2.06	4.28	6.14	9.68	2.38	4.74	7.04	11.33
9	12	1.47	2.53	4.59	6.36	9.62	2.90	5.16	7.35	11.21
	16	1.15	2.19	4.25	6.01	9.30	2.54	4.80	6.97	10.87
	24	0.55[7]	1.56	3.61	5.35	8.67	1.85	4.12	6.24	10.20
10	12	1.18	2.17	4.05	5.69	8.71	2.52	4.64	6.65	10.19
	16	0.81[7]	1.78	3.66	5.29	8.33	2.10	4.22	6.19	9.78
	24	0.15[6]	1.07[6]	2.94	4.54	7.61	1.33[7]	3.44	5.35	9.01
12	12	0.61[6]	1.44[7]	2.96	4.31	6.82	1.75	3.54	5.07	8.07
	16	0.20[6]	0.99[6]	2.52[7]	3.84	6.36	1.25[6]	3.03	4.54	7.57
	24	0.00[3]	0.20[3]	1.73[6]	3.00[6]	5.52[7]	0.36[6]	2.14[6]	3.59[7]	6.66
14	12	0.14[3]	0.81[6]	2.01[6]	3.05[7]	5.06	1.03[6]	2.44[7]	3.62	6.08
	16	0.00[3]	0.35[3]	1.57[6]	2.58[6]	4.59[7]	0.51[6]	1.93[6]	3.08[6]	5.55
	24	0.00[2]	0.00[2]	0.79[3]	1.76[3]	3.75[6]	0.00[3]	1.04[3]	2.15[6]	4.63[6]
16	12	0.00[2]	0.32[3]	1.30[3]	2.10[6]	3.71[6]	0.46[3]	1.60[6]	2.52[6]	4.51[7]
	16	0.00[2]	0.00[2]	0.87[3]	1.65[3]	3.25[6]	0.00[3]	1.11[3]	2.00[6]	4.00[6]
	24	0.00[1]	0.00[2]	0.14[2]	0.89[2]	2.46[3]	0.00[2]	0.27[2]	1.12[3]	3.11[3]

NOTES:

1 Deflection exceeds L/120
2 Deflection exceeds L/240
3 Deflection exceeds L/360
6 Deflection exceeds L/600
7 Deflection exceeds L/720
Axial Load Multiplier = 1
Lateral Load Multiplier - Strength = 1
Lateral Load Multiplier - Deflection = 1.0

Allowable Combined Axial and Bending Loads 20psf lateral load

Wall	Spacing	550S137mils (Fy)					550S162-mils (Fy)				
Ht. (ft)	(in) o.c.	-33 (33)	-43 (33)	-54 (50)	-68 (50)	-97 (50)	-33 (33)	-43 (33)	-54 (50)	-68 (50)	-97 (50)
8	12	1.39	2.17	3.56	4.81	7.25	1.93	2.95	5.22	7.06	10.93
	16	1.22	2.02	3.43	4.69	7.13	1.74	2.77	5.05	6.89	10.76
	24	0.89	1.71	3.17	4.43	6.89	1.35	2.41	4.70	6.55	10.41
9	12	1.24	2.04	3.44	4.70	7.14	1.75	2.77	5.03	6.90	10.76
	16	1.03	1.84	3.27	4.53	6.98	1.50	2.54	4.80	6.67	10.53
	24	0.62	1.46	2.94	4.21	6.66	1.03	2.09	4.36	6.23	10.08
10	12	1.08	1.88	3.30	4.56	7.00	1.54	2.56	4.76	6.69	10.55
	16	0.83	1.64	3.09	4.35	6.80	1.24	2.28	4.48	6.40	10.26
	24	0.34	1.18	2.68	3.95	6.40	0.69	1.74	3.95	5.85	9.69
12	12	0.72	1.53	2.96	4.21	6.64	1.08	2.07	4.10	5.91	9.96
	16	0.38[7]	1.20	2.65	3.91	6.33	0.70[7]	1.69	3.72	5.51	9.51
	24	0.00[6]	0.58[6]	2.08[7]	3.33	5.74	0.00[6]	0.99[7]	3.01	4.76	8.67
14	12	0.34[6]	1.12[7]	2.54	3.77	6.16	0.61[6]	1.53	3.34	4.97	8.55
	16	0.00[6]	0.71[6]	2.14[7]	3.36	5.73	0.17[6]	1.08[6]	2.88[7]	4.48	7.99
	24	0.00[3]	0.00[3]	1.42[6]	2.61[6]	4.93[7]	0.00[3]	0.26[6]	2.05[6]	3.59[6]	6.96
16	12	0.00[3]	0.68[6]	1.99[6]	3.21[7]	5.54	0.18[6]	1.00[6]	2.57[7]	3.97	7.03
	16	0.00[3]	0.23[3]	1.54[6]	2.72[6]	4.99[7]	0.00[3]	0.51[6]	2.07[6]	3.44[6]	6.40
	24	0.00[2]	0.00[2]	0.75[3]	1.85[3]	4.03[6]	0.00[2]	0.00[3]	1.19[3]	2.48[6]	5.29[6]

NOTES:

1 Deflection exceeds L/120
2 Deflection exceeds L/240
3 Deflection exceeds L/360
6 Deflection exceeds L/600
7 Deflection exceeds L/720
Axial Load Multiplier = 1
Lateral Load Multiplier - Strength = 1
Lateral Load Multiplier - Deflection = 1.0

Allowable Combined Axial and Bending Loads 20psf lateral load

Wall	Spacing	600S137-mils (Fy)					600S162-mils (Fy)				
Ht. (ft)	(in) o.c.	-33 (33)	-43 (33)	-54 (50)	-68 (50)	-97 (50)	-33 (33)	-43 (33)	-54 (50)	-68 (50)	-97 (50)
8	12	1.42	2.17	3.53	4.77	7.30	2.00	3.02	5.25	7.10	11.06
	16	1.27	2.02	3.40	4.65	7.20	1.82	2.85	5.10	6.95	10.91
	24	0.97	1.73	3.15	4.40	6.99	1.47	2.53	4.79	6.65	10.61
9	12	1.29	2.04	3.41	4.66	7.21	1.85	2.87	5.11	6.96	10.91
	16	1.10	1.85	3.25	4.50	7.07	1.62	2.66	4.91	6.76	10.72
	24	0.73	1.48	2.93	4.18	6.80	1.18	2.25	4.51	6.38	10.34
10	12	1.15	1.90	3.28	4.53	7.09	1.67	2.71	4.94	6.79	10.74
	16	0.92	1.67	3.08	4.33	6.92	1.40	2.45	4.69	6.55	10.50
	24	0.47	1.22	2.69	3.94	6.58	0.86	1.94	4.20	6.06	10.01
12	12	0.82	1.56	2.97	4.21	6.80	1.25	2.28	4.48	6.37	10.29
	16	0.50	1.24	2.68	3.92	6.54	0.88	1.92	4.11	6.00	9.91
	24	0.00[6]	0.63[7]	2.13	3.36	6.03	0.19[6]	1.24	3.43	5.29	9.18
14	12	0.46[7]	1.17	2.59	3.81	6.42	0.79	1.78	3.78	5.58	9.63
	16	0.07[6]	0.76[7]	2.21	3.42	6.05	0.35[6]	1.33[7]	3.33	5.10	9.09
	24	0.00[3]	0.01[6]	1.50[6]	2.68[7]	5.35	0.00[6]	0.52[6]	2.49[6]	4.21	8.09
16	12	0.09[6]	0.76[6]	2.15[7]	3.33	5.92	0.35[6]	1.26[7]	3.03	4.63	8.21
	16	0.00[3]	0.28[6]	1.69[6]	2.84[7]	5.44	0.00[6]	0.75[6]	2.52[6]	4.08	7.58
	24	0.00[2]	0.00[3]	0.85[3]	1.95[6]	4.56[6]	0.00[3]	0.00[3]	1.60[6]	3.09[6]	6.44[7]

Wall	Spacing	600S200-mils (Fy)					600S250-mils (Fy)			
Ht. (ft)	(in) o.c.	-33 (33)	-43 (33)	-54 (50)	-68 (50)	-97 (50)	-43 (33)	-54 (50)	-68 (50)	-97 (50)
8	12	2.43	3.86	7.01	9.55	15.23	4.19	7.21	10.58	17.81
	16	2.25	3.66	6.81	9.36	15.04	3.99	7.01	10.37	17.60
	24	1.88	3.27	6.42	9.00	14.67	3.59	6.63	9.96	17.19
9	12	2.26	3.65	6.73	9.25	14.84	3.98	6.95	10.24	17.31
	16	2.02	3.40	6.48	9.01	14.60	3.72	6.70	9.97	17.04
	24	1.56	2.91	5.98	8.54	14.12	3.22	6.22	9.45	16.51
10	12	2.06	3.41	6.41	8.89	14.37	3.74	6.65	9.84	16.72
	16	1.77	3.11	6.10	8.59	14.06	3.43	6.34	9.51	16.38
	24	1.22	2.51	5.49	8.01	13.47	2.82	5.75	8.86	15.72
12	12	1.60	2.86	5.63	8.00	13.16	3.19	5.93	8.88	15.26
	16	1.22	2.44	5.19	7.58	12.72	2.76	5.50	8.41	14.77
	24	0.50[7]	1.66	4.37	6.77	11.86	1.94	4.69	7.51	13.82
14	12	1.11	2.24	4.71	6.92	11.64	2.57	5.10	7.75	13.49
	16	0.64[7]	1.73	4.18	6.38	11.06	2.02	4.56	7.15	12.84
	24	0.00[6]	0.79[6]	3.19[7]	5.39	9.97	1.03[7]	3.56	6.02	11.64
16	12	0.62[6]	1.62	3.76	5.75	9.94	1.92	4.26	6.56	11.55
	16	0.10[6]	1.04[6]	3.16[7]	5.13	9.25	1.29[7]	3.62	5.84	10.79
	24	0.00[3]	0.01[6]	2.09[6]	4.03[6]	8.01	0.17[6]	2.47[6]	4.56[7]	9.40

NOTES:

1 Deflection exceeds L/120
2 Deflection exceeds L/240
3 Deflection exceeds L/360
6 Deflection exceeds L/600
7 Deflection exceeds L/720
Axial Load Multiplier = 1
Lateral Load Multiplier - Strength = 1
Lateral Load Multiplier - Deflection = 1.0

Allowable Combined Axial and Bending Loads 20psf lateral load

Wall	Spacing	800S137-mils (Fy)					800S162-mils (Fy)				
Ht. (ft)	(in) o.c.	-33 (33)	-43 (33)	-54 (50)	-68 (50)	-97 (50)	-33 (33)	-43 (33)	-54 (50)	-68 (50)	-97 (50)
8	12	1.46	2.19	3.38	4.56	7.04	2.10	3.07	5.18	7.00	11.01
	16	1.35	2.09	3.29	4.48	6.97	1.97	2.95	5.06	6.89	10.91
	24	1.14	1.88	3.12	4.32	6.81	1.71	2.70	4.84	6.67	10.69
9	12	1.37	2.10	3.31	4.49	6.98	1.99	2.97	5.08	6.90	10.92
	16	1.24	1.97	3.20	4.39	6.88	1.83	2.81	4.94	6.76	10.78
	24	0.96	1.71	2.98	4.18	6.68	1.50	2.50	4.65	6.48	10.51
10	12	1.27	2.01	3.22	4.42	6.91	1.87	2.85	4.97	6.80	10.81
	16	1.10	1.84	3.09	4.29	6.78	1.67	2.65	4.79	6.62	10.64
	24	0.77	1.52	2.83	4.03	6.54	1.27	2.27	4.43	6.27	10.29
12	12	1.04	1.78	3.03	4.23	6.72	1.59	2.57	4.71	6.53	10.55
	16	0.80	1.54	2.84	4.04	6.54	1.30	2.29	4.44	6.27	10.29
	24	0.33	1.09	2.46	3.67	6.19	0.74	1.74	3.93	5.76	9.77
14	12	0.77	1.51	2.80	4.00	6.50	1.25	2.24	4.38	6.20	10.20
	16	0.45	1.19	2.54	3.74	6.25	0.87	1.86	4.02	5.84	9.84
	24	0.00[7]	0.59	2.02	3.24	5.76	0.15[7]	1.14	3.32	5.14	9.12
16	12	0.46	1.20	2.53	3.73	6.22	0.88	1.86	3.98	5.80	9.77
	16	0.07[7]	0.80	2.18	3.39	5.89	0.41[7]	1.38	3.52	5.32	9.27
	24	0.00[6]	0.06[4]	1.53[7]	2.73	5.24	0.00[6]	0.49[7]	2.63	4.42	8.33

Wall	Spacing	800S200-mils (Fy)					800S250-mils (Fy)			
Ht. (ft)	(in) o.c.	-33 (33)	-43 (33)	-54 (50)	-68 (50)	-97 (50)	-43 (33)	-54 (50)	-68 (50)	-97 (50)
8	12	2.65	4.14	7.42	9.99	15.70	4.55	7.85	11.46	19.44
	16	2.51	4.00	7.28	9.86	15.57	4.40	7.70	11.31	19.29
	24	2.23	3.71	6.99	9.60	15.33	4.10	7.42	11.00	18.99
9	12	2.53	4.02	7.30	9.88	15.59	4.41	7.69	11.28	19.22
	16	2.36	3.84	7.11	9.71	15.43	4.22	7.51	11.09	19.03
	24	2.01	3.47	6.75	9.38	15.11	3.84	7.14	10.70	18.65
10	12	2.40	3.88	7.15	9.75	15.46	4.25	7.51	11.08	18.96
	16	2.18	3.65	6.92	9.54	15.26	4.02	7.28	10.84	18.72
	24	1.75	3.20	6.47	9.12	14.85	3.55	6.83	10.35	18.24
12	12	2.09	3.55	6.81	9.42	15.14	3.87	7.05	10.57	18.30
	16	1.78	3.22	6.47	9.11	14.83	3.53	6.73	10.21	17.94
	24	1.17	2.57	5.81	8.49	14.22	2.87	6.08	9.50	17.23
14	12	1.71	3.11	6.28	8.94	14.71	3.42	6.48	9.85	17.31
	16	1.30	2.67	5.82	8.51	14.27	2.96	6.04	9.36	16.81
	24	0.52	1.83	4.94	7.66	13.41	2.10	5.18	8.42	15.84
16	12	1.28	2.59	5.55	8.12	13.78	2.89	5.81	8.94	15.96
	16	0.78	2.05	4.98	7.57	13.20	2.33	5.25	8.33	15.32
	24	0.00[6]	1.03	3.91	6.52	12.09	1.27	4.19	7.15	14.08

NOTES:

1 Deflection exceeds L/120
2 Deflection exceeds L/240
3 Deflection exceeds L/360
6 Deflection exceeds L/600
7 Deflection exceeds L/720
Axial Load Multiplier = 1
Lateral Load Multiplier - Strength = 1
Lateral Load Multiplier - Deflection = 1.0

Allowable Combined Axial and Bending Loads 20psf lateral load

Wall	Spacing	1000S162-mils (Fy)				1000S200-mils (Fy)				1000S250-mils (Fy)			
Ht. (ft)	(in) o.c.	-43 (33)	-54 (50)	-68 (50)	-97 (50)	-43 (33)	-54 (50)	-68 (50)	-97 (50)	-43 (33)	-54 (50)	-68 (50)	-97 (50)
8	12	3.06	5.01	6.77	10.68	4.18	7.35	9.86	15.55	4.69	8.01	11.65	19.65
	16	2.96	4.92	6.68	10.61	4.07	7.24	9.76	15.45	4.57	7.90	11.53	19.54
	24	2.77	4.75	6.52	10.50	3.84	7.03	9.55	15.24	4.33	7.67	11.30	19.32
9	12	2.98	4.94	6.70	10.62	4.09	7.26	9.78	15.46	4.59	7.92	11.55	19.56
	16	2.58	4.83	6.59	10.52	3.94	7.12	9.64	15.33	4.44	7.77	11.40	19.41
	24	2.61	4.61	6.39	10.32	3.66	6.84	9.37	15.07	4.13	7.49	11.10	19.13
10	12	2.89	4.86	6.62	10.54	3.98	7.16	9.68	15.36	4.48	7.81	11.44	19.45
	16	2.73	4.72	6.49	10.42	3.80	6.98	9.51	15.20	4.29	7.63	11.25	19.27
	24	2.43	4.45	6.23	10.17	3.45	6.64	9.17	14.88	3.91	7.28	10.88	18.91
12	12	2.68	4.67	6.44	10.37	3.73	6.91	9.43	15.12	4.22	7.56	11.16	19.18
	16	2.46	4.47	6.25	10.18	3.47	6.65	9.19	14.88	3.94	7.29	10.89	18.91
	24	2.02	4.08	5.87	9.82	2.96	6.15	8.70	14.41	3.40	6.77	10.34	18.38
14	12	2.42	4.44	6.21	10.14	3.43	6.60	9.13	14.82	3.88	7.20	10.80	18.84
	16	2.13	4.16	5.95	9.89	3.08	6.25	8.79	14.49	3.51	6.84	10.42	18.46
	24	1.54	3.63	5.43	9.38	2.39	5.56	8.12	13.82	2.78	6.14	9.66	17.71
16	12	2.13	4.16	5.94	9.87	3.08	6.23	8.77	14.45	3.48	6.72	10.25	18.20
	16	1.74	3.80	5.59	9.53	2.63	5.77	8.31	14.00	3.00	6.26	9.75	17.70
	24	1.00	3.11	4.91	8.86	1.74	4.87	7.42	13.10	2.08	5.35	8.77	16.70

Wall	Spacing	1200S162-mils (Fy)			1200S200-mils (Fy)			1200S250-mils (Fy)		
Ht. (ft)	(in) o.c.	-54 (50)	-68 (50)	-97 (50)	-54 (50)	-68 (50)	-97 (50)	-54 (50)	-68 (50)	-97 (50)
8	12	4.80	6.48	10.24	6.51	9.47	15.28	7.50	10.91	19.28
	16	4.73	6.41	10.18	6.43	9.39	15.20	7.42	10.82	19.18
	24	4.59	6.28	10.05	6.27	9.22	15.04	7.25	10.64	18.99
9	12	4.74	6.42	10.19	6.45	9.41	15.21	7.44	10.83	19.20
	16	4.65	6.34	10.11	6.35	9.30	15.11	7.33	10.72	19.07
	24	4.48	6.17	9.95	6.15	9.09	14.91	7.11	10.49	18.83
10	12	4.68	6.36	10.13	6.38	9.33	15.14	7.36	10.75	19.11
	16	4.57	6.26	10.03	6.25	9.20	15.01	7.23	10.61	18.95
	24	4.35	6.05	9.84	6.01	8.93	14.76	6.96	10.32	18.65
12	12	4.53	6.22	10.00	6.21	9.14	14.96	7.19	10.55	18.89
	16	4.37	6.07	9.86	6.04	8.95	14.77	6.99	10.34	18.67
	24	4.05	5.77	9.57	5.68	8.57	14.40	6.61	9.93	18.22
14	12	4.35	6.05	9.83	6.02	8.92	14.74	6.98	10.31	18.62
	16	4.13	5.84	8.64	5.78	8.65	14.48	6.72	10.02	18.31
	24	3.69	5.43	9.25	5.30	8.13	13.96	6.20	9.45	17.69
16	12	4.13	5.84	9.64	5.80	8.65	14.47	6.74	10.02	18.30
	16	3.85	5.57	9.38	5.48	8.30	14.12	6.40	9.63	17.88
	24	3.28	5.03	8.87	4.85	7.61	13.43	5.72	8.88	17.06

NOTES:

1 Deflection exceeds L/120
2 Deflection exceeds L/240
3 Deflection exceeds L/360
6 Deflection exceeds L/600
7 Deflection exceeds L/720
Axial Load Multiplier = 1
Lateral Load Multiplier - Strength = 1
Lateral Load Multiplier - Deflection = 1.0

Allowable Combined Axial and Bending Loads 25psf lateral load

Wall	Spacing	250S137-mils (Fy)					250S162-mils (Fy)				
Ht. (ft)	(in) o.c.	-33 (33)	-43 (33)	-54 (50)	-68 (50)	-97 (50)	-33 (33)	-43 (33)	-54 (50)	-68 (50)	-97 (50)
8	12	0.21[3]	0.63[6]	1.30[6]	1.89[7]	3.17	0.38[6]	0.88[6]	1.65[7]	2.31	3.72
	16	0.00[3]	0.37[3]	1.08[6]	1.65[6]	2.88[7]	0.11[3]	0.61[6]	1.42[6]	2.06[6]	3.42
	24	0.00[2]	0.00[2]	0.70[3]	1.23[3]	2.36[6]	0.00[2]	0.12[3]	1.00[3]	1.61[6]	2.90[6]
9	12	0.02[3]	0.37[3]	0.99[6]	1.48[6]	2.50[7]	0.14[3]	0.58[6]	1.28[6]	1.84[6]	2.99
	16	0.00[2]	0.11[3]	0.76[3]	1.24[3]	2.21[6]	0.00[2]	0.30[3]	1.04[3]	1.58[6]	2.69[6]
	24	0.00[2]	0.00[2]	0.37[2]	0.81[2]	1.69[3]	0.00[2]	0.00[2]	0.60[2]	1.11[3]	2.15[6]
10	12	0.00[2]	0.16[2]	0.73[3]	1.14[3]	1.96[6]	0.00[2]	0.33[3]	0.97[3]	1.44[6]	2.39[6]
	16	0.00[2]	0.00[2]	0.50[2]	0.89[3]	1.66[3]	0.00[2]	0.05[2]	0.72[3]	1.17[3]	2.08[6]
	24	0.00[1]	0.00[1]	0.10[2]	0.46[2]	1.16[2]	0.00[1]	0.00[2]	0.29[2]	0.71[2]	1.55[3]
12	12	0.00[1]	0.00[2]	0.33[2]	0.62[2]	1.17[3]	0.00[2]	0.00[2]	0.49[2]	0.83[2]	1.49[3]
	16	0.00[1]	0.00[1]	0.11[2]	0.39[2]	0.90[2]	0.00[1]	0.00[1]	0.26[2]	0.58[2]	1.20[2]
	24	0.00[1]	0.00[1]	0.00[1]	0.00[1]	0.43[2]	0.00[1]	0.00[1]	0.00[1]	0.14[1]	0.70[2]
14	12	0.00[1]	0.00[1]	0.07[1]	0.28[2]	0.67[2]	0.00[1]	0.00[1]	0.19[2]	0.43[2]	0.90[2]
	16	0.00[1]	0.00[1]	0.00[1]	0.07[1]	0.42[2]	0.00[1]	0.00[1]	0.00[1]	0.20[1]	0.63[2]
	24	0.00[1]	0.00[1]	0.00[1]	0.00[1]	0.00[1]	0.00[1]	0.00[1]	0.00[1]	0.00[1]	0.18[1]
16	12	0.00[1]	0.00[1]	0.00[1]	0.07[1]	0.34[1]	0.00[1]	0.00[1]	0.00[1]	0.17[1]	0.51[2]
	16	0.00[1]	0.00[1]	0.00[1]	0.00[1]	0.12[1]	0.00[1]	0.00[1]	0.00[1]	0.00[1]	0.27[1]
	24	0.00[1]	0.00[1]	0.00[1]	0.00[1]	0.00[1]	0.00[1]	0.00[1]	0.00[1]	0.00[1]	0.00[1]

Wall	Spacing	350S137-mils (Fy)					350S162-mils (Fy)				
Ht. (ft)	(in) o.c.	-33 (33)	-43 (33)	-54 (50)	-68 (50)	-97 (50)	-33 (33)	-43 (33)	-54 (50)	-68 (50)	-97 (50)
8	12	0.67	1.26	2.44	3.38	5.29	0.97	1.68	3.17	4.27	6.69
	16	0.39[6]	0.96	2.17	3.09	5.02	0.66[7]	1.36	2.87	3.96	6.39
	24	0.00[6]	0.40[6]	1.66[7]	2.56	4.50	0.09[6]	0.76[6]	2.30[7]	3.38	5.81
9	12	0.42[6]	0.96[7]	2.06	2.91	4.92	0.67[7]	1.33	2.69	3.70	5.92
	16	0.11[6]	0.61[6]	1.74[7]	2.58	4.58	0.33[6]	0.96[7]	2.34	3.34	5.56
	24	0.00[3]	0.00[3]	1.17[6]	1.97[6]	3.94[7]	0.00[3]	0.29[6]	1.71[6]	2.68[7]	4.88
10	12	0.18[6]	0.66[6]	1.67[7]	2.43	4.23	0.39[6]	0.99[6]	2.21	3.11	5.11
	16	0.00[3]	0.29[6]	1.33[6]	2.07[6]	3.85	0.02[3]	0.59[6]	1.84[6]	2.72[7]	4.71
	24	0.00[2]	0.00[3]	0.72[3]	1.42[6]	3.16[6]	0.00[2]	0.00[3]	1.17[6]	2.02[6]	3.98[6]
12	12	0.00[2]	0.15[3]	0.99[6]	1.57[6]	2.92[6]	0.00[3]	0.39[3]	1.37[6]	2.06[6]	3.60[7]
	16	0.00[2]	0.00[2]	0.64[3]	1.19[3]	2.53[6]	0.00[2]	0.00[3]	0.99[3]	1.65[6]	3.18[6]
	24	0.00[1]	0.00[2]	0.02[2]	0.53[2]	1.83[3]	0.00[2]	0.00[2]	0.32[2]	0.94[3]	2.43[3]
14	12	0.00[2]	0.00[2]	0.49[2]	0.92[3]	1.95[6]	0.00[2]	0.00[2]	0.76[3]	1.28[3]	2.46[6]
	16	0.00[1]	0.00[2]	0.15[2]	0.56[2]	1.57[3]	0.00[2]	0.00[2]	0.39[2]	0.89[3]	2.05[3]
	24	0.00[1]	0.00[1]	0.00[1]	0.00[2]	0.91[2]	0.00[1]	0.00[1]	0.00[2]	0.21[2]	1.34[2]
16	12	0.00[1]	0.00[2]	0.14[2]	0.47[2]	1.26[3]	0.00[1]	0.00[2]	0.34[2]	0.73[2]	1.66[3]
	16	0.00[1]	0.00[1]	0.00[1]	0.13[2]	0.91[2]	0.00[1]	0.00[1]	0.00[2]	0.37[2]	1.27[2]
	24	0.00[1]	0.00[1]	0.00[1]	0.00[1]	0.31[2]	0.00[1]	0.00[1]	0.00[1]	0.00[1]	0.61[2]

NOTES:

1 Deflection exceeds L/120
2 Deflection exceeds L/240
3 Deflection exceeds L/360
6 Deflection exceeds L/600
7 Deflection exceeds L/720
Axial Load Multiplier = 1
Lateral Load Multiplier - Strength = 1
Lateral Load Multiplier - Deflection = 1.0

Allowable Combined Axial and Bending Loads 25psf lateral load

Wall	Spacing	362S137-mils (Fy)					362S162-mils (Fy)				
Ht. (ft)	(in) o.c.	-33 (33)	-43 (33)	-54 (50)	-68 (50)	-97 (50)	-33 (33)	-43 (33)	-54 (50)	-68 (50)	-97 (50)
8	12	0.73	1.34	2.60	3.61	5.45	1.04	1.78	3.36	4.57	7.12
	16	0.45[7]	1.04	2.32	3.33	5.19	0.73	1.46	3.05	4.25	6.81
	24	0.00[6]	0.49[6]	1.81[7]	2.78	4.69	0.16[6]	0.86[7]	2.48	3.66	6.23
9	12	0.48[6]	1.04	2.23	3.15	5.15	0.74[7]	1.44	2.89	3.99	6.35
	16	0.16[6]	0.70[6]	1.90[7]	2.81	4.82	0.39[6]	1.06[7]	2.54	3.62	5.99
	24	0.00[3]	0.07[6]	1.32[6]	2.18[6]	4.19	0.00[3]	0.39[6]	1.89[6]	2.94[7]	5.30
10	12	0.23[6]	0.74[6]	1.84[7]	2.67	4.59	0.46[6]	1.09[7]	2.42	3.40	5.55
	16	0.00[3]	0.37[6]	1.49[6]	2.29[7]	4.20	0.08[6]	0.68[6]	2.03[6]	2.99	5.13
	24	0.00[2]	0.00[3]	0.85[3]	1.61[6]	3.49[6]	0.00[3]	0.00[3]	1.34[6]	2.26[6]	4.38[7]
12	12	0.00[3]	0.21[3]	1.12[6]	1.75[6]	3.24[7]	0.00[3]	0.47[6]	1.54[6]	2.29[6]	3.98
	16	0.00[2]	0.00[3]	0.75[3]	1.36[6]	2.82[6]	0.00[2]	0.03[3]	1.13[3]	1.86[6]	3.53[6]
	24	0.00[2]	0.00[2]	0.10[2]	0.66[3]	2.09[3]	0.00[2]	0.00[2]	0.43[2]	1.11[3]	2.74[6]
14	12	0.00[2]	0.00[2]	0.58[3]	1.06[3]	2.18[6]	0.00[2]	0.00[2]	0.87[3]	1.45[3]	2.75[6]
	16	0.00[1]	0.00[2]	0.22[2]	0.67[2]	1.79[3]	0.00[2]	0.00[2]	0.48[2]	1.04[3]	2.31[3]
	24	0.00[1]	0.00[1]	0.00[2]	0.01[2]	1.09[2]	0.00[1]	0.00[1]	0.00[2]	0.32[2]	1.56[2]
16	12	0.00[1]	0.00[2]	0.20[2]	0.56[2]	1.44[3]	0.00[2]	0.00[2]	0.41[2]	0.86[2]	1.87[3]
	16	0.00[1]	0.00[1]	0.00[2]	0.20[2]	1.07[2]	0.00[1]	0.00[1]	0.05[2]	0.47[2]	1.46[2]
	24	0.00[1]	0.00[1]	0.00[1]	0.00[1]	0.43[2]	0.00[1]	0.00[1]	0.00[1]	0.00[1]	0.77[2]

Wall	Spacing	362S200-mils (Fy)					362S250-mils (Fy)			
Ht. (ft)	(in) o.c.	-33 (33)	-43 (33)	-54 (50)	-68 (50)	-97 (50)	-43 (33)	-54 (50)	-68 (50)	-97 (50)
8	12	1.34	2.34	4.27	5.79	8.75	2.71	4.85	6.77	10.20
	16	1.00	1.99	3.92	5.45	8.42	2.33	4.48	6.38	9.86
	24	0.37[6]	1.33	3.26	4.79	7.80	1.61	3.77	5.65	9.20
9	12	1.00	1.93	3.68	5.08	7.83	2.28	4.27	5.96	9.17
	16	0.61[6]	1.52	3.28	4.68	7.44	1.83	3.82	5.50	8.76
	24	0.00[6]	0.78[6]	2.54[7]	3.93	6.71	1.01[7]	3.01	4.65	7.98
10	12	0.68[6]	1.53	3.10	4.36	6.87	1.84	3.67	5.13	8.11
	16	0.25[6]	1.07[6]	2.65[7]	3.91	6.43	1.34[7]	3.18	4.62	7.64
	24	0.00[3]	0.27[6]	1.86[6]	3.11[6]	5.62	0.45[6]	2.28[6]	3.71[7]	6.77
12	12	0.11[3]	0.79[6]	2.01[6]	3.01[7]	5.01	1.01[6]	2.44[7]	3.58	6.02
	16	0.00[3]	0.30[3]	1.55[6]	2.53[6]	4.53[7]	0.46[6]	1.92[6]	3.04[6]	5.49
	24	0.00[2]	0.00[2]	0.75[3]	1.70[3]	3.67[6]	0.00[3]	1.00[3]	2.09[6]	4.55[6]
14	12	0.00[2]	0.22[3]	1.20[3]	1.97[6]	3.53[6]	0.35[3]	1.48[6]	2.37[6]	4.31[7]
	16	0.00[2]	0.00[2]	0.75[3]	1.51[3]	3.06[6]	0.00[3]	0.98[3]	1.84[6]	3.79[6]
	24	0.00[1]	0.00[2]	0.00[2]	0.72[2]	2.23[3]	0.00[2]	0.11[2]	0.93[3]	2.88[3]
16	12	0.00[2]	0.00[2]	0.63[2]	1.24[3]	2.47[6]	0.00[2]	0.82[3]	1.51[3]	3.07[6]
	16	0.00[1]	0.00[2]	0.22[2]	0.81[2]	2.02[3]	0.00[2]	0.34[2]	1.02[3]	2.57[3]
	24	0.00[1]	0.00[1]	0.00[1]	0.08[2]	1.25[2]	0.00[1]	0.00[2]	0.17[2]	1.71[2]

NOTES:

1 Deflection exceeds L/120
2 Deflection exceeds L/240
3 Deflection exceeds L/360
6 Deflection exceeds L/600
7 Deflection exceeds L/720
Axial Load Multiplier = 1
Lateral Load Multiplier - Strength = 1
Lateral Load Multiplier - Deflection = 1.0

Allowable Combined Axial and Bending Loads 25psf lateral load

Wall	Spacing	400S137-mils (Fy)					400S162-mils (Fy)				
Ht. (ft)	(in) o.c.	-33 (33)	-43 (33)	-54 (50)	-68 (50)	-97 (50)	-33 (33)	-43 (33)	-54 (50)	-68 (50)	-97 (50)
8	12	0.89	1.56	2.98	4.24	5.91	1.23	2.05	3.85	5.37	8.36
	16	0.61	1.27	2.71	3.94	5.68	0.93	1.74	3.55	5.06	8.05
	24	0.10[6]	0.72[7]	2.19	3.39	5.22	0.37[7]	1.15	2.98	4.45	7.47
9	12	0.64	1.27	2.63	3.84	5.66	0.94	1.72	3.41	4.84	7.64
	16	0.32[6]	0.93[7]	2.31	3.49	5.35	0.59[7]	1.35	3.06	4.45	7.26
	24	0.00[6]	0.29[6]	1.70[6]	2.82[7]	4.78	0.00[6]	0.66[6]	2.39[7]	3.73	6.56
10	12	0.39[6]	0.97[7]	2.26	3.36	5.35	0.65[7]	1.38	2.95	4.26	6.84
	16	0.03[6]	0.59[6]	1.89[7]	2.95	4.97	0.26[6]	0.96[7]	2.54	3.82	6.41
	24	0.00[3]	0.00[3]	1.22[6]	2.21[6]	4.27[7]	0.00[3]	0.20[6]	1.81[6]	3.01[7]	5.60
12	12	0.00[3]	0.41[6]	1.51[6]	2.37[7]	4.26	0.13[6]	0.72[6]	2.03[6]	3.06[7]	5.19
	16	0.00[2]	0.00[3]	1.09[6]	1.91[6]	3.79[7]	0.00[3]	0.25[3]	1.58[6]	2.56[6]	4.69[7]
	24	0.00[2]	0.00[2]	0.37[3]	1.11[3]	2.96[6]	0.00[2]	0.00[2]	0.78[3]	1.70[3]	3.79[6]
14	12	0.00[2]	0.00[3]	0.87[3]	1.52[6]	2.99[6]	0.00[2]	0.18[3]	1.26[6]	2.02[6]	3.71[6]
	16	0.00[2]	0.00[2]	0.46[2]	1.06[3]	2.53[6]	0.00[2]	0.00[2]	0.81[3]	1.54[3]	3.20[6]
	24	0.00[1]	0.00[2]	0.00[2]	0.28[2]	1.72[3]	0.00[1]	0.00[2]	0.03[2]	0.70[2]	2.33[3]
16	12	0.00[2]	0.00[2]	0.40[2]	0.89[3]	2.05[3]	0.00[2]	0.00[2]	0.68[3]	1.27[3]	2.59[6]
	16	0.00[1]	0.00[2]	0.00[2]	0.46[2]	1.61[3]	0.00[1]	0.00[2]	0.25[2]	0.81[2]	2.12[3]
	24	0.00[1]	0.00[1]	0.00[1]	0.00[2]	0.85[2]	0.00[1]	0.00[1]	0.00[2]	0.02[2]	1.30[2]

Wall	Spacing	400S200-mils (Fy)					400S250-mils (Fy)			
Ht. (ft)	(in) o.c.	-33 (33)	-43 (33)	-54 (50)	-68 (50)	-97 (50)	-43 (33)	-54 (50)	-68 (50)	-97 (50)
8	12	1.55	2.67	4.89	6.76	10.25	3.03	5.37	7.72	11.94
	16	1.22	2.32	4.55	6.41	9.93	2.66	5.02	7.34	11.60
	24	0.60[7]	1.67	3.89	5.75	9.31	1.97	4.34	6.61	10.94
9	12	1.23	2.28	4.34	6.10	9.38	2.63	4.89	7.06	10.95
	16	0.84	1.87	3.92	5.68	8.98	2.19	4.45	6.60	10.53
	24	0.14[6]	1.12[7]	3.16	4.89	8.23	1.38	3.64	5.72	9.73
10	12	0.90	1.87	3.75	5.39	8.42	2.20	4.32	6.31	9.88
	16	0.47[6]	1.41[7]	3.29	4.91	7.96	1.70	3.82	5.76	9.39
	24	0.00[6]	0.58[6]	2.45[6]	4.03[7]	7.10	0.80[6]	2.90[7]	4.77	8.47
12	12	0.30[6]	1.10[6]	2.62[7]	3.95	6.47	1.37[7]	3.16	4.66	7.69
	16	0.00[3]	0.58[6]	2.11[6]	3.41[7]	5.93	0.79[6]	2.57[6]	4.05	7.10
	24	0.00[2]	0.00[3]	1.20[3]	2.45[6]	4.96[6]	0.00[3]	1.54[6]	2.95[6]	6.04[7]
14	12	0.00[3]	0.46[3]	1.67[6]	2.69[6]	4.70[7]	0.63[6]	2.05[6]	3.21[7]	5.68
	16	0.00[2]	0.00[3]	1.16[3]	2.15[6]	4.15[6]	0.03[3]	1.47[6]	2.60[6]	5.07[7]
	24	0.00[2]	0.00[2]	0.28[2]	1.23[3]	3.20[3]	0.00[2]	0.46[3]	1.53[3]	4.01[6]
16	12	0.00[2]	0.00[2]	0.97[3]	1.76[3]	3.36[6]	0.07[3]	1.23[3]	2.13[6]	4.12[6]
	16	0.00[2]	0.00[2]	0.49[2]	1.26[3]	2.84[3]	0.00[2]	0.67[3]	1.54[3]	3.54[6]
	24	0.00[1]	0.00[1]	0.00[2]	0.39[2]	1.93[2]	0.00[2]	0.00[2]	0.55[2]	2.53[3]

NOTES:

1 Deflection exceeds L/120
2 Deflection exceeds L/240
3 Deflection exceeds L/360
6 Deflection exceeds L/600
7 Deflection exceeds L/720
Axial Load Multiplier = 1
Lateral Load Multiplier - Strength = 1
Lateral Load Multiplier - Deflection = 1.0

Allowable Combined Axial and Bending Loads 25psf lateral load

Wall	Spacing	550S137-mils (Fy)					550S162-mils (Fy)				
Ht. (ft)	(in) o.c.	-33 (33)	-43 (33)	-54 (50)	-68 (50)	-97 (50)	-33 (33)	-43 (33)	-54 (50)	-68 (50)	-97 (50)
8	12	1.26	2.06	3.46	4.72	7.16	1.79	2.82	5.09	6.93	10.80
	16	1.05	1.87	3.30	4.56	7.01	1.54	2.59	4.87	6.72	10.58
	24	0.65	1.49	2.97	4.24	6.70	1.07	2.14	4.44	6.30	10.16
9	12	1.08	1.89	3.31	4.57	7.02	1.56	2.59	4.86	6.73	10.59
	16	0.83	1.65	3.10	4.37	6.82	1.26	2.31	4.58	6.45	10.31
	24	0.33	1.18	2.69	3.97	6.43	0.68	1.76	4.04	5.91	9.76
10	12	0.89	1.70	3.14	4.40	6.85	1.32	2.34	4.55	6.47	10.33
	16	0.58	1.41	2.88	4.15	6.59	0.96	2.00	4.21	6.13	9.97
	24	0.00[6]	0.85	2.38	3.65	6.10	0.29[7]	1.35	3.56	5.46	9.28
12	12	0.46[7]	1.28	2.73	3.98	6.41	0.79	1.78	3.82	5.61	9.62
	16	0.06[6]	0.88[7]	2.36	3.61	6.03	0.34[6]	1.33	3.36	5.13	9.08
	24	0.00[3]	0.15[6]	1.67[6]	2.92[7]	5.32	0.00[6]	0.50[6]	2.51[7]	4.24	8.07
14	12	0.03[6]	0.81[6]	2.24[7]	3.46	5.83	0.28[6]	1.19[7]	2.99	4.59	8.13
	16	0.00[3]	0.33[6]	1.77[6]	2.98[7]	5.32	0.00[3]	0.66[6]	2.45[6]	4.02[7]	7.46
	24	0.00[2]	0.00[3]	0.93[3]	2.10[6]	4.39[6]	0.00[2]	0.00[3]	1.49[6]	2.98[6]	6.26[7]
16	12	0.00[3]	0.33[6]	1.65[6]	2.83[6]	5.12	0.00[3]	0.63[6]	2.19[6]	3.56[7]	6.56
	16	0.00[2]	0.00[3]	1.13[3]	2.27[6]	4.50[6]	0.00[3]	0.06[3]	1.61[6]	2.94[6]	5.82[7]
	24	0.00[2]	0.00[2]	0.22[2]	1.27[3]	3.39[6]	0.00[2]	0.00[2]	0.60[3]	1.84[3]	4.55[6]

NOTES:

1 Deflection exceeds L/120
2 Deflection exceeds L/240
3 Deflection exceeds L/360
6 Deflection exceeds L/600
7 Deflection exceeds L/720
Axial Load Multiplier = 1
Lateral Load Multiplier - Strength = 1
Lateral Load Multiplier - Deflection = 1.0

Allowable Combined Axial and Bending Loads 25psf lateral load

Wall	Spacing	600S137-mils (Fy)					600S162-mils (Fy)				
Ht. (ft)	(in) o.c.	-33 (33)	-43 (33)	-54 (50)	-68 (50)	-97 (50)	-33 (33)	-43 (33)	-54 (50)	-68 (50)	-97 (50)
8	12	1.31	2.06	3.43	4.68	7.22	1.87	2.89	5.14	6.99	10.94
	16	1.12	1.87	3.27	4.52	7.09	1.64	2.69	4.94	6.80	10.76
	24	0.75	1.51	2.96	4.22	6.83	1.21	2.28	4.56	6.43	10.39
9	12	1.15	1.90	3.29	4.54	7.10	1.68	2.71	4.96	6.81	10.77
	16	0.91	1.67	3.09	4.34	6.93	1.40	2.45	4.71	6.57	10.53
	24	0.46	1.21	2.70	3.95	6.59	0.86	1.95	4.22	6.09	10.05
10	12	0.97	1.72	3.13	4.38	6.96	1.46	2.51	4.75	6.61	10.56
	16	0.69	1.44	2.88	4.13	6.75	1.13	2.19	4.44	6.30	10.25
	24	0.14[7]	0.89	2.40	3.65	6.32	0.48	1.58	3.84	5.71	9.65
12	12	0.58	1.32	2.75	3.99	6.61	0.97	2.01	4.20	6.09	10.01
	16	0.20[7]	0.93	2.40	3.64	6.28	0.53[7]	1.58	3.77	5.64	9.54
	24	0.00[6]	0.20[6]	1.73[7]	2.95	5.66	0.00[6]	0.76[7]	2.94	4.79	8.66
14	12	0.16[6]	0.86[7]	2.30	3.51	6.14	0.45[6]	1.44	3.44	5.21	9.22
	16	0.00[6]	0.38[6]	1.84[7]	3.04	5.70	0.00[6]	0.91[6]	2.90[7]	4.64	8.58
	24	0.00[3]	0.00[3]	1.00[6]	2.16[6]	4.86[7]	0.00[3]	0.00[6]	1.92[6]	3.60[6]	7.39
16	12	0.00[3]	0.39[6]	1.80[6]	2.96[7]	5.56	0.00[6]	0.87[6]	2.64[7]	4.21	7.74
	16	0.00[3]	0.00[3]	1.25[6]	2.38[6]	4.99[7]	0.00[3]	0.29[6]	2.04[6]	3.57[6]	6.99
	24	0.00[2]	0.00[2]	0.28[3]	1.35[3]	3.95[6]	0.00[2]	0.00[3]	0.98[3]	2.42[6]	5.67

Wall	Spacing	600S200-mils (Fy)					600S250-mils (Fy)			
Ht. (ft)	(in) o.c.	-33 (33)	-43 (33)	-54 (50)	-68 (50)	-97 (50)	-43 (33)	-54 (50)	-68 (50)	-97 (50)
8	12	2.29	3.71	6.86	9.41	15.09	4.04	7.06	10.43	17.65
	16	2.06	3.46	6.61	9.18	14.86	3.79	6.82	10.17	17.39
	24	1.60	2.98	6.12	8.72	14.40	3.29	6.35	9.65	16.88
9	12	2.08	3.46	6.54	9.07	14.66	3.79	6.76	10.04	17.11
	16	1.79	3.15	6.23	8.78	14.36	3.47	6.76	9.71	16.77
	24	1.23	2.55	5.61	8.19	13.77	2.85	5.87	9.06	16.12
10	12	1.84	3.18	6.17	8.67	14.14	3.51	6.42	9.59	16.47
	16	1.49	2.81	5.79	8.30	13.76	3.12	6.05	9.18	16.05
	24	0.82	2.08	5.05	7.59	13.03	2.38	5.32	8.39	15.24
12	12	1.31	2.55	5.30	7.68	12.83	2.87	5.61	8.53	14.89
	16	0.85	2.04	4.78	7.17	12.28	2.34	5.09	7.95	14.29
	24	0.00[6]	1.10[7]	3.79	6.20	11.25	1.35	4.11	6.86	13.15
14	12	0.76[7]	1.86	4.31	6.51	11.20	2.16	4.69	7.29	13.00
	16	0.21[6]	1.25[7]	3.67	5.87	10.50	1.51	4.05	6.57	12.23
	24	0.00[3]	0.14[6]	2.51[6]	4.70[7]	9.21	0.34[6]	2.86[7]	5.24	10.80
16	12	0.23[6]	1.18[6]	3.31	5.28	9.42	1.44[7]	3.78	6.02	10.97
	16	0.00[3]	0.50[6]	2.61[6]	4.57[7]	8.61	0.71[6]	3.03[7]	5.18	10.07
	24	0.00[2]	0.00[3]	1.37[6]	3.28[6]	7.16[7]	0.00[3]	1.70[6]	3.70[6]	8.47[7]

NOTES:

1 Deflection exceeds L/120
2 Deflection exceeds L/240
3 Deflection exceeds L/360
6 Deflection exceeds L/600
7 Deflection exceeds L/720
Axial Load Multiplier = 1
Lateral Load Multiplier - Strength = 1
Lateral Load Multiplier - Deflection = 1.0

Allowable Combined Axial and Bending Loads 25psf lateral load

Wall	Spacing	800S137-mils (Fy)					800S162-mils (Fy)				
Ht. (ft)	(in) o.c.	-33 (33)	-43 (33)	-54 (50)	-68 (50)	-97 (50)	-33 (33)	-43 (33)	-54 (50)	-68 (50)	-97 (50)
8	12	1.38	2.11	3.31	4.50	6.98	2.00	2.98	5.09	6.92	10.93
	16	1.25	1.98	3.21	4.40	6.89	1.84	2.82	4.95	6.78	10.80
	24	0.98	1.72	3.00	4.20	6.70	1.52	2.52	4.67	6.51	10.53
9	12	1.27	2.01	3.22	4.42	6.90	1.87	2.85	4.97	6.80	10.82
	16	1.10	1.84	3.09	4.29	6.78	1.66	2.65	4.79	6.62	10.64
	24	0.76	1.51	2.82	4.03	6.54	1.26	2.26	4.44	6.27	10.30
10	12	1.15	1.88	3.12	4.32	6.81	1.72	2.70	4.84	6.66	10.68
	16	0.93	1.68	2.96	4.16	6.66	1.47	2.46	4.61	6.44	10.46
	24	0.52	1.28	2.63	3.84	6.36	0.97	1.98	4.17	6.01	10.03
12	12	0.86	1.60	2.89	4.09	6.59	1.37	2.36	4.51	6.34	10.35
	16	0.56	1.31	2.65	3.86	6.37	1.02	2.01	4.18	6.02	10.03
	24	0.00	0.75	2.17	3.40	5.92	0.33	1.34	3.55	5.38	9.39
14	12	0.53	1.27	2.60	3.81	6.31	0.97	1.96	4.11	5.93	9.93
	16	0.14	0.89	2.28	3.49	3.00	0.51	1.49	3.66	5.49	9.48
	24	0.00[6]	0.16[7]	1.64	2.87	5.39	0.00[6]	0.62	2.81	4.63	8.60
16	12	0.17[7]	0.90	2.27	3.47	5.97	0.53	1.50	3.63	5.44	9.40
	16	0.00[6]	0.42[7]	1.85	3.06	5.56	0.00[6]	0.93	3.07	4.86	8.79
	24	0.00[3]	0.00[6]	1.06[6]	2.27[7]	4.77	0.00[6]	0.00[6]	2.01[7]	3.78	7.65

Wall	Spacing	800S200-mils (Fy)					800S250-mils (Fy)			
Ht. (ft)	(in) o.c.	-33 (33)	-43 (33)	-54 (50)	-68 (50)	-97 (50)	-43 (33)	-54 (50)	-68 (50)	-97 (50)
8	12	2.55	4.03	7.31	9.89	15.60	4.44	7.74	11.34	19.32
	16	2.37	3.85	7.14	9.73	15.45	4.25	7.56	11.15	19.14
	24	2.03	3.49	6.78	9.41	15.14	3.88	7.20	10.78	18.77
9	12	2.40	3.88	7.16	9.75	15.47	4.27	7.55	11.14	19.08
	16	2.18	3.65	6.93	9.54	15.27	4.03	7.33	10.89	18.84
	24	1.75	3.20	6.48	9.13	14.87	3.56	6.87	10.41	18.36
10	12	2.24	3.71	6.98	9.59	15.31	4.08	7.34	10.90	18.78
	16	1.97	3.42	6.70	9.33	15.05	3.78	7.05	10.59	18.48
	24	1.43	2.86	6.13	8.81	14.55	3.20	6.49	9.99	17.88
12	12	1.86	3.30	6.55	9.18	14.91	3.62	6.81	10.30	18.03
	16	1.48	2.89	6.13	8.80	14.53	3.20	6.40	9.85	17.58
	24	0.73	2.10	5.32	8.04	13.78	2.38	5.60	8.99	16.70
14	12	1.40	2.78	5.93	8.61	14.38	3.08	6.15	9.48	16.94
	16	0.91	2.24	5.37	8.08	13.83	2.53	5.61	8.89	16.32
	24	0.00[7]	1.22	4.30	7.05	12.79	1.47	4.57	7.74	15.13
16	12	0.91	2.18	5.12	7.71	13.34	2.47	5.39	8.48	15.47
	16	0.31[7]	1.53	4.43	7.04	12.64	1.79	4.71	7.73	14.69
	24	0.00[6]	0.32[6]	3.15	5.77	11.29	0.53[7]	3.44	6.32	13.19

NOTES:

1 Deflection exceeds L/120
2 Deflection exceeds L/240
3 Deflection exceeds L/360
6 Deflection exceeds L/600
7 Deflection exceeds L/720
Axial Load Multiplier = 1
Lateral Load Multiplier - Strength = 1
Lateral Load Multiplier - Deflection = 1.0

Allowable Combined Axial and Bending Loads 25 psf lateral load

Wall	Spacing	1000S162-mils (Fy)				1000S200-mils (Fy)				1000S250-mils (Fy)			
Ht. (ft)	(in) o.c.	-43 (33)	-54 (50)	-68 (50)	-97 (50)	-43 (33)	-54 (50)	-68 (50)	-97 (50)	-43 (33)	-54 (50)	-68 (50)	-97 (50)
8	12	2.98	4.95	6.71	10.62	4.10	7.27	9.79	15.47	4.60	7.93	11.56	19.57
	16	2.86	4.84	6.60	10.53	3.95	7.13	9.65	15.34	4.45	7.79	11.41	19.43
	24	2.62	4.62	6.40	10.33	3.67	6.86	9.39	15.09	4.15	7.51	11.12	19.15
9	12	2.88	4.86	6.62	10.54	3.98	7.16	9.68	15.36	4.48	7.81	11.44	19.45
	16	2.73	4.72	6.49	10.42	3.80	6.98	9.51	15.20	4.29	7.63	11.25	19.27
	24	2.42	4.45	6.23	10.17	3.44	6.64	9.17	14.88	3.91	7.27	10.88	18.91
10	12	2.77	4.76	6.52	10.45	3.85	7.03	9.55	15.24	4.34	7.68	11.30	19.31
	16	2.58	4.59	5.36	10.30	3.63	6.81	9.34	15.04	4.10	7.45	11.06	19.09
	24	2.20	4.25	5.04	9.98	3.18	6.38	8.92	14.63	3.63	7.01	10.60	18.64
12	12	2.51	4.52	6.29	10.23	3.54	6.72	9.25	14.94	4.01	7.36	10.96	18.98
	16	2.24	4.27	6.06	10.00	3.22	6.40	8.94	14.64	3.67	7.03	10.61	18.64
	24	1.70	3.79	5.59	9.55	2.58	5.78	8.33	14.05	3.00	6.39	9.93	17.98
14	12	2.20	4.23	6.01	9.95	3.17	6.34	8.88	14.57	3.60	6.93	10.51	18.55
	16	1.83	3.90	5.69	9.65	2.73	5.90	8.45	14.15	3.14	6.49	10.04	18.08
	24	1.11	3.23	5.04	9.01	1.88	5.05	7.62	13.32	2.25	5.61	9.10	17.16
16	12	1.84	3.89	5.68	9.62	2.74	5.89	8.42	14.11	3.12	6.37	9.88	17.82
	16	1.37	3.45	5.25	9.20	2.18	5.32	7.86	13.55	2.53	5.80	9.26	17.20
	24	0.45	2.60	4.41	8.37	1.11	4.22	6.77	12.45	1.14	4.69	8.05	15.97

Wall	Spacing	1200S162-mils (Fy)			1200S200-mils (Fy)			1200S250-mils (Fy)		
Ht. (ft)	(in) o.c.	-54 (50)	-68 (50)	-97 (50)	-54 (50)	-68 (50)	-97 (50)	-54 (50)	-68 (50)	-97 (50)
8	12	4.75	6.43	10.19	6.45	9.41	15.22	7.44	10.84	19.20
	16	4.66	6.35	10.12	6.34	9.31	15.12	7.33	10.73	19.08
	24	4.49	6.18	9.96	6.14	9.10	14.92	7.12	10.50	18.85
9	12	4.68	6.36	10.13	6.37	9.33	15.13	7.36	10.75	19.11
	16	4.56	6.26	10.03	6.25	9.19	15.01	7.22	10.60	18.95
	24	4.34	6.05	9.84	6.00	8.93	14.75	6.95	10.32	18.65
10	12	4.60	6.29	10.06	6.28	9.23	15.04	7.26	10.64	18.99
	16	4.46	6.16	9.94	6.13	9.06	14.88	7.09	10.46	18.80
	24	4.19	5.90	9.70	5.82	8.74	14.56	6.76	10.11	18.42
12	12	4.41	6.11	9.89	6.08	9.00	14.82	7.04	10.39	18.72
	16	4.21	5.92	9.72	5.86	8.76	14.58	6.80	10.13	18.44
	24	3.81	5.54	9.36	5.42	8.28	14.12	6.32	9.62	17.89
14	12	4.18	5.89	9.69	5.84	8.72	14.54	6.78	10.09	18.39
	16	3.91	5.63	9.44	5.54	8.39	14.22	6.46	9.73	18.00
	24	3.37	5.12	8.96	4.94	7.73	13.57	5.81	9.02	17.23
16	12	3.92	5.64	9.45	5.56	8.39	14.21	6.48	9.73	17.99
	16	3.56	5.30	9.12	5.17	7.95	13.78	6.06	9.26	17.47
	24	2.86	4.63	8.49	4.38	7.09	12.92	5.21	8.32	16.44

NOTES:

1 Deflection exceeds L/120
2 Deflection exceeds L/240
3 Deflection exceeds L/360
6 Deflection exceeds L/600
7 Deflection exceeds L/720
Axial Load Multiplier = 1
Lateral Load Multiplier - Strength = 1
Lateral Load Multiplier - Deflection = 1.0

Allowable Combined Axial and Bending Loads 30psf lateral load

Wall	Spacing	250S137-mils (Fy)					250S162-mils (Fy)				
Ht. (ft)	(in) o.c.	-33 (33)	-43 (33)	-54 (50)	-68 (50)	-97 (50)	-33 (33)	-43 (33)	-54 (50)	-68 (50)	-97 (50)
8	12	0.06[3]	0.47[6]	1.17[6]	1.74[6]	2.99	0.22[3]	0.71[6]	1.51[6]	2.16[7]	3.54
	16	0.00[2]	0.19[3]	0.92[3]	1.48[6]	2.66[6]	0.00[3]	0.40[3]	1.24[6]	1.87[6]	3.2[7]
	24	0.00[2]	0.00[2]	0.49[2]	1.00[3]	2.08[6]	0.00[2]	0.00[2]	0.77[3]	1.36[3]	2.61[6]
9	12	0.00[2]	0.21[3]	0.85[3]	1.33[6]	2.32[6]	0.00[3]	0.41[3]	1.13[6]	1.68[6]	2.81[7]
	16	0.00[2]	0.00[2]	0.60[3]	1.06[3]	1.99[6]	0.00[2]	0.09[2]	0.86[3]	1.38[3]	2.46[6]
	24	0.00[1]	0.00[2]	0.15[2]	0.57[2]	1.41[3]	0.00[2]	0.00[2]	0.37[2]	0.86[2]	1.85[3]
10	12	0.00[2]	0.01[2]	0.59[2]	0.99[3]	1.78[6]	0.00[2]	0.16[2]	0.81[3]	1.27[3]	2.20[6]
	16	0.00[1]	0.00[2]	0.33[2]	0.71[2]	1.45[3]	0.00[2]	0.00[2]	0.54[2]	0.98[3]	1.86[3]
	24	0.00[1]	0.00[1]	0.00[1]	0.23[2]	0.89[2]	0.00[1]	0.00[1]	0.06[2]	0.46[2]	1.26[2]
12	12	0.00[1]	0.00[1]	0.20[2]	0.48[2]	1.00[2]	0.00[1]	0.00[2]	0.35[2]	0.67[2]	1.31[3]
	16	0.00[1]	0.00[1]	0.00[1]	0.22[2]	0.70[2]	0.00[1]	0.00[1]	0.09[2]	0.39[2]	0.99[2]
	24	0.00[1]	0.00[1]	0.00[1]	0.00[1]	0.19[1]	0.00[1]	0.00[1]	0.00[1]	0.00[1]	0.43[2]
14	12	0.00[1]	0.00[1]	0.00[1]	0.15[1]	0.52[2]	0.00[1]	0.00[1]	0.05[1]	0.29[2]	0.74[2]
	16	0.00[1]	0.00[1]	0.00[1]	0.00[1]	0.25[1]	0.00[1]	0.00[1]	0.00[1]	0.03[1]	0.44[2]
	24	0.00[1]	0.00[1]	0.00[1]	0.00[1]	0.00[1]	0.00[1]	0.00[1]	0.00[1]	0.00[1]	0.00[1]
16	12	0.00[1]	0.00[1]	0.00[1]	0.00[1]	0.21[1]	0.00[1]	0.00[1]	0.00[1]	0.04[1]	0.37[1]
	16	0.00[1]	0.00[1]	0.00[1]	0.00[1]	0.00[1]	0.00[1]	0.00[1]	0.00[1]	0.00[1]	0.10[1]
	24	0.00[1]	0.00[1]	0.00[1]	0.00[1]	0.00[1]	0.00[1]	0.00[1]	0.00[1]	0.00[1]	0.00[1]

Wall	Spacing	350S137-mils (Fy)					350S137-mils (Fy)				
Ht. (ft)	(in) o.c.	-33 (33)	-43 (33)	-54 (50)	-68 (50)	-97 (50)	-33 (33)	-43 (33)	-54 (50)	-68 (50)	-97 (50)
8	12	0.50[7]	1.07	2.27	3.21	5.12	0.78	1.49	2.99	4.08	6.51
	16	0.18[6]	0.73[7]	1.96	2.87	4.80	0.43[6]	1.11[7]	2.64	3.72	6.15
	24	0.00[3]	0.10[6]	1.37[6]	2.25[7]	4.20	0.00[6]	0.42[6]	1.99[6]	3.05	5.47
9	12	0.23[6]	0.75[6]	1.86[7]	2.71	4.71	0.46[6]	1.11[7]	2.48	3.48	5.70
	16	0.00[3]	0.36[6]	1.51[6]	2.33[7]	4.31	0.07[6]	0.69[6]	2.08[7]	3.06	5.28
	24	0.00[2]	0.00[3]	0.86[3]	1.63[6]	3.58[6]	0.00[3]	0.00[3]	1.37[6]	2.31[6]	4.50[7]
10	12	0.00[3]	0.44[6]	1.46[6]	2.21[7]	4.00	0.17[6]	0.74[6]	1.99[7]	2.88	4.87
	16	0.00[3]	0.02[3]	1.08[6]	1.80[6]	3.56[7]	0.00[3]	0.29[6]	1.56[6]	2.43[6]	4.41
	24	0.00[2]	0.00[2]	0.40[3]	1.07[3]	2.78[6]	0.00[2]	0.00[3]	0.81[3]	1.63[6]	3.58[6]
12	12	0.00[2]	0.00[3]	0.77[3]	1.34[6]	2.68[6]	0.00[2]	0.13[3]	1.13[3]	1.81[6]	3.34[6]
	16	0.00[2]	0.00[2]	0.38[2]	0.91[3]	2.23[6]	0.00[2]	0.00[2]	0.70[3]	1.35[3]	2.86[6]
	24	0.00[1]	0.00[2]	0.00[2]	0.18[2]	1.45[3]	0.00[1]	0.00[2]	0.00[2]	0.56[2]	2.03[3]
14	12	0.00[2]	0.00[2]	0.28[2]	0.70[2]	1.71[3]	0.00[2]	0.00[2]	0.53[2]	1.04[3]	2.21[6]
	16	0.00[1]	0.00[1]	0.00[2]	0.29[2]	1.29[2]	0.00[1]	0.00[2]	0.13[2]	0.60[2]	1.75[3]
	24	0.00[1]	0.00[1]	0.00[1]	0.00[1]	0.56[2]	0.00[1]	0.00[1]	0.00[1]	0.00[2]	0.96[2]
16	12	0.00[1]	0.00[1]	0.00[2]	0.26[2]	1.05[2]	0.00[1]	0.00[2]	0.13[2]	0.51[2]	1.42[3]
	16	0.00[1]	0.00[1]	0.00[1]	0.00[1]	0.66[2]	0.00[1]	0.00[1]	0.00[1]	0.11[2]	0.99[2]
	24	0.00[1]	0.00[1]	0.00[1]	0.00[1]	0.00[1]	0.00[1]	0.00[1]	0.00[1]	0.00[1]	0.27[2]

NOTES:

1 Deflection exceeds L/120
2 Deflection exceeds L/240
3 Deflection exceeds L/360
6 Deflection exceeds L/600
7 Deflection exceeds L/720
Axial Load Multiplier = 1
Lateral Load Multiplier - Strength = 1
Lateral Load Multiplier - Deflection = 1.0

Allowable Combined Axial and Bending Loads 30psf lateral load

Wall	Spacing	362S137-mils (Fy)					362S162-mils (Fy)				
Ht. (ft)	(in) o.c.	-33 (33)	-43 (33)	-54 (50)	-68 (50)	-97 (50)	-33 (33)	-43 (33)	-54 (50)	-68 (50)	-97 (50)
8	12	0.56[7]	1.16	2.43	3.44	5.30	0.85	1.59	3.17	4.38	6.93
	16	0.24[6]	0.81[7]	2.11	3.10	4.99	0.50[7]	1.21	2.82	4.01	6.57
	24	0.00[3]	0.18[6]	1.52[6]	2.47[7]	4.40	0.00[6]	0.52[6]	2.16[7]	3.32	5.89
9	12	0.28[6]	0.83[7]	2.03	2.94	4.95	0.53[6]	1.21	2.68	3.77	6.13
	16	0.00[6]	0.44[6]	1.66[6]	2.55[7]	4.56	0.13[6]	0.78[6]	2.27[7]	3.34	5.71
	24	0.00[3]	0.00[3]	0.99[6]	1.84[6]	3.83[7]	0.00[3]	0.02[6]	1.54[6]	2.57[6]	4.91
10	12	0.02[3]	0.51[6]	1.62[6]	2.44[7]	4.35	0.23[6]	0.84[6]	2.18[7]	3.15	5.30
	16	0.00[3]	0.09[3]	1.22[6]	2.01[6]	3.91[7]	0.00[3]	0.38[6]	1.74[6]	2.69[7]	4.82
	24	0.00[2]	0.00[2]	0.51[3]	1.25[3]	3.10[6]	0.00[2]	0.00[3]	0.96[3]	1.86[6]	3.96[6]
12	12	0.00[2]	0.00[3]	0.89[3]	1.51[6]	2.99[6]	0.00[2]	0.20[3]	1.29[6]	2.03[6]	3.70[7]
	16	0.00[2]	0.00[2]	0.48[3]	1.06[3]	2.52[6]	0.00[2]	0.00[2]	0.84[3]	1.55[3]	3.20[6]
	24	0.00[1]	0.00[2]	0.00[2]	0.29[2]	1.70[3]	0.00[1]	0.00[2]	0.05[2]	0.71[2]	2.32[3]
14	12	0.00[2]	0.00[2]	0.35[2]	0.82[3]	1.94[3]	0.00[2]	0.00[2]	0.64[2]	1.19[3]	2.48[6]
	16	0.00[1]	0.00[2]	0.00[2]	0.39[2]	1.49[3]	0.00[1]	0.00[2]	0.21[2]	0.73[2]	2.00[3]
	24	0.00[1]	0.00[1]	0.00[1]	0.00[2]	0.72[2]	0.00[1]	0.00[1]	0.00[1]	0.00[2]	1.16[2]
16	12	0.00[1]	0.00[1]	0.00[2]	0.34[2]	1.21[2]	0.00[1]	0.00[2]	0.19[2]	0.62[2]	1.62[3]
	16	0.00[1]	0.00[1]	0.00[1]	0.00[2]	0.80[2]	0.00[1]	0.00[1]	0.00[2]	0.19[2]	1.17[2]
	24	0.00[1]	0.00[1]	0.00[1]	0.00[1]	0.09[1]	0.00[1]	0.00[1]	0.00[1]	0.00[1]	0.40[2]

Wall	Spacing	362S200-mils (Fy)					362S250-mils (Fy)			
Ht. (ft)	(in) o.c.	-33 (33)	-43 (33)	-54 (50)	-68 (50)	-97 (50)	-43 (33)	-54 (50)	-68 (50)	-97 (50)
8	12	1.13	2.13	4.06	5.58	8.55	2.48	4.62	6.53	9.99
	16	0.74[7]	1.71	3.65	5.18	8.17	2.03	4.19	6.08	9.59
	24	0.02[6]	0.95[7]	2.89	4.42	7.44	1.21[7]	3.37	5.23	8.82
9	12	0.77[7]	1.68	3.44	4.84	7.59	2.01	4.00	5.68	8.92
	16	0.32[6]	1.21[7]	2.97	4.37	7.14	1.49	3.49	5.15	8.44
	24	0.00[3]	0.37[6]	2.12[6]	3.51[7]	6.29	0.56[6]	2.56[7]	4.18	7.54
10	12	0.42[6]	1.25[7]	2.83	4.09	6.60	1.54	3.37	4.82	7.82
	16	0.00[6]	0.74[6]	2.32[6]	3.58[7]	6.10	0.97[6]	2.81[7]	4.24	7.28
	24	0.00[3]	0.00[3]	1.43[6]	2.66[6]	5.17[7]	0.00[6]	1.80[6]	3.20[6]	6.28
12	12	0.00[3]	0.49[6]	1.73[6]	2.72[6]	4.72	0.67[6]	2.12[6]	3.25[7]	5.69
	16	0.00[2]	0.00[3]	1.21[3]	2.19[6]	4.17[6]	0.06[3]	1.53[6]	2.64[6]	5.10[7]
	24	0.00[2]	0.00[2]	0.31[2]	1.26[3]	3.21[6]	0.00[2]	0.51[3]	1.57[3]	4.04[6]
14	12	0.00[2]	0.00[2]	0.92[3]	1.69[3]	3.24[6]	0.01[3]	1.17[3]	2.05[6]	3.99[6]
	16	0.00[2]	0.00[2]	0.43[2]	1.18[3]	2.71[3]	0.00[2]	0.61[3]	1.46[3]	3.40[6]
	24	0.00[1]	0.00[1]	0.00[2]	0.31[2]	1.80[2]	0.00[2]	0.00[2]	0.45[2]	2.38[3]
16	12	0.00[1]	0.00[2]	0.38[2]	0.97[2]	2.20[3]	0.00[2]	0.53[2]	1.21[3]	2.77[6]
	16	0.00[1]	0.00[1]	0.00[2]	0.50[2]	1.70[2]	0.00[2]	0.00[2]	0.66[2]	2.21[3]
	24	0.00[1]	0.00[1]	0.00[1]	0.00[1]	0.85[2]	0.00[1]	0.00[1]	0.00[2]	1.25[2]

NOTES:

1 Deflection exceeds L/120
2 Deflection exceeds L/240
3 Deflection exceeds L/360
6 Deflection exceeds L/600
7 Deflection exceeds L/720
Axial Load Multiplier = 1
Lateral Load Multiplier - Strength = 1
Lateral Load Multiplier - Deflection = 1.0

Allowable Combined Axial and Bending Loads 30psf lateral load

Wall	Spacing	400S137-mils (Fy)					400S162-mils (Fy)				
Ht. (ft)	(in) o.c.	-33 (33)	-43 (33)	-54 (50)	-68 (50)	-97 (50)	-33 (33)	-43 (33)	-54 (50)	-68 (50)	-97 (50)
8	12	0.72	1.38	2.81	4.06	5.77	1.05	1.86	3.67	5.18	8.17
	16	0.40[7]	1.04	2.50	3.72	5.49	0.70	1.50	3.32	4.81	7.82
	24	0.00[6]	0.41[6]	1.90[7]	3.07	4.96	0.05[6]	0.81[7]	2.66	4.10	7.13
9	12	0.44[7]	1.06	2.43	3.63	5.47	0.73[7]	1.49	3.20	4.61	7.41
	16	0.07[6]	0.67[6]	2.06	3.21	5.12	0.33[6]	1.07[7]	2.78	4.16	6.98
	24	0.00[3]	0.00[6]	1.37[6]	2.45[6]	4.45	0.00[3]	0.28[6]	2.02[6]	3.33[7]	6.16
10	12	0.17[6]	0.74[6]	2.03[7]	3.11	5.12	0.41[6]	1.12[7]	2.70	3.99	6.58
	16	0.00[3]	0.30[6]	1.61[6]	2.65[7]	4.68	0.00[6]	0.64[6]	2.24[7]	3.48	6.08
	24	0.00[2]	0.00[3]	0.85[3]	1.80[6]	3.88[6]	0.00[3]	0.00[3]	1.40[6]	2.57[6]	5.16[7]
12	12	0.00[3]	0.14[3]	1.25[6]	2.09[6]	3.98[7]	0.00[3]	0.43[6]	1.75[6]	2.76[6]	4.88
	16	0.00[2]	0.00[3]	0.79[3]	1.58[6]	3.45[6]	0.00[2]	0.00[3]	1.25[3]	2.20[6]	4.32[6]
	24	0.00[2]	0.00[2]	0.00[2]	0.68[3]	2.51[3]	0.00[2]	0.00[2]	0.36[2]	1.23[3]	3.31[6]
14	12	0.00[2]	0.00[2]	0.62[3]	1.24[3]	2.70[6]	0.00[2]	0.00[3]	0.98[3]	1.72[6]	3.40[6]
	16	0.00[2]	0.00[2]	0.16[2]	0.73[2]	2.19[3]	0.00[2]	0.00[2]	0.48[2]	1.18[3]	2.84[6]
	24	0.00[1]	0.00[1]	0.00[2]	0.00[2]	1.29[2]	0.00[1]	0.00[2]	0.00[2]	0.25[2]	1.86[3]
16	12	0.00[1]	0.00[2]	0.16[2]	0.62[2]	1.77[3]	0.00[2]	0.00[2]	0.42[2]	0.98[3]	2.30[3]
	16	0.00[1]	0.00[1]	0.00[2]	0.15[2]	1.29[2]	0.00[1]	0.00[2]	0.00[2]	0.48[2]	1.77[3]
	24	0.00[1]	0.00[1]	0.00[1]	0.00[1]	0.46[2]	0.00[1]	0.00[1]	0.00[1]	0.00[2]	0.86[2]

Wall	Spacing	400S200-mils (Fy)					400S250-mils (Fy)			
Ht. (ft)	(in) o.c.	-33 (33)	-43 (33)	-54 (50)	-68 (50)	-97 (50)	-43 (33)	-54 (50)	-68 (50)	-97 (50)
8	12	1.35	2.46	4.68	6.55	10.06	2.81	5.16	7.49	11.73
	16	0.97	2.06	4.28	6.14	9.68	2.38	4.74	7.04	11.33
	24	0.26[6]	1.30	3.52	5.37	8.95	1.58	3.95	6.19	10.55
9	12	0.99	2.03	4.09	5.84	9.14	2.36	4.62	6.78	10.70
	16	0.55[7]	1.56	3.61	5.35	8.67	1.85	4.12	6.24	10.20
	24	0.00[6]	0.70[6]	2.73[7]	4.45	7.80	0.92[7]	3.18	5.22	9.27
10	12	0.64[7]	1.59	3.47	5.09	8.14	1.90	4.02	5.98	9.59
	16	0.15[6]	1.07[6]	2.94	4.54	7.61	1.33[7]	3.44	5.35	9.01
	24	0.00[3]	0.13[6]	1.98[6]	3.54[6]	6.62	0.30[6]	2.39[6]	4.22[7]	7.94
12	12	0.00[3]	0.78[6]	2.31[6]	3.62[7]	6.14	1.01[6]	2.80[7]	4.29	7.33
	16	0.00[3]	0.20[3]	1.73[6]	3.00[6]	5.52[7]	0.36[6]	2.14[6]	3.59[7]	6.66
	24	0.00[2]	0.00[2]	0.71[3]	1.93[3]	4.42[6]	0.00[3]	0.99[3]	2.36[6]	5.46[6]
14	12	0.00[2]	0.13[3]	1.36[3]	2.36[6]	4.37[6]	0.26[3]	1.69[6]	2.83[6]	5.31[7]
	16	0.00[2]	0.00[2]	0.79[3]	1.76[3]	3.75[6]	0.00[3]	1.04[3]	2.15[6]	4.63[6]
	24	0.00[1]	0.00[2]	0.00[2]	0.74[2]	2.68[3]	0.00[2]	0.00[2]	0.97[3]	3.44[3]
16	12	0.00[2]	0.00[2]	0.68[2]	1.45[3]	3.04[6]	0.00[2]	0.89[3]	1.77[3]	3.76[6]
	16	0.00[1]	0.00[2]	0.14[2]	0.89[2]	2.46[3]	0.00[2]	0.27[2]	1.12[3]	3.11[3]
	24	0.00[1]	0.00[1]	0.00[1]	0.00[2]	1.46[2]	0.00[1]	0.00[2]	0.02[2]	1.99[2]

NOTES:

1 Deflection exceeds L/120
2 Deflection exceeds L/240
3 Deflection exceeds L/360
6 Deflection exceeds L/600
7 Deflection exceeds L/720
Axial Load Multiplier = 1
Lateral Load Multiplier - Strength = 1
Lateral Load Multiplier - Deflection = 1.0

Allowable Combined Axial and Bending Loads 30psf lateral load

Wall	Spacing	550S137-mils (Fy)					550S162-mils (Fy)				
Ht. (ft)	(in) o.c.	-33 (33)	-43 (33)	-54 (50)	-68 (50)	-97 (50)	-33 (33)	-43 (33)	-54 (50)	-68 (50)	-97 (50)
8	12	1.13	1.94	3.36	4.62	7.07	1.64	2.68	4.96	6.80	10.67
	16	0.89	1.71	3.17	4.43	6.89	1.35	2.41	4.70	6.55	10.41
	24	0.41	1.27	2.78	4.06	6.52	0.79	1.88	4.19	6.05	9.91
9	12	0.93	1.75	3.19	4.45	6.90	1.38	2.42	4.69	6.56	10.42
	16	0.62	1.46	2.94	4.21	6.66	1.03	2.09	4.36	6.23	10.08
	24	0.04[7]	0.91	2.45	3.73	6.19	0.35	1.44	3.72	5.59	9.43
10	12	0.70	1.53	2.98	4.25	6.69	1.10	2.14	4.35	6.26	10.11
	16	0.34	1.18	2.68	3.95	6.40	6.85	1.74	3.95	5.85	9.69
	24	0.00[6]	0.53[7]	2.09	3.36	5.81	0.00[6]	0.97[7]	3.18	5.07	8.87
12	12	0.22[6]	1.04[7]	2.51	3.76	6.18	0.52[7]	1.51	3.54	5.32	9.29
	16	0.00[6]	0.58[6]	2.08[7]	3.33	5.74	0.00[6]	0.99[7]	3.01	4.76	8.67
	24	0.00[3]	0.00[3]	1.29[6]	2.52[6]	4.91	0.00[3]	0.04[6]	2.04[6]	3.74[7]	7.50
14	12	0.00[3]	0.52[6]	1.95[6]	3.16[7]	5.52	0.00[6]	0.86[6]	2.66[7]	4.24	7.72
	16	0.00[3]	0.00[3]	1.42[6]	2.61[6]	4.93[7]	0.00[3]	0.26[6]	2.05[6]	3.59[6]	6.96
	24	0.00[2]	0.00[2]	0.47[3]	1.62[3]	3.87[6]	0.00[2]	0.00[3]	0.96[3]	2.41[6]	5.60[6]
16	12	0.00[2]	0.01[3]	1.33[6]	2.49[6]	4.74[7]	0.00[3]	0.28[3]	1.83[6]	3.18[6]	6.10[7]
	16	0.00[2]	0.00[2]	0.75[3]	1.85[3]	4.03[6]	0.00[2]	0.00[3]	1.19[3]	2.48[6]	5.29[6]
	24	0.00[1]	0.00[2]	0.00[2]	0.74[2]	2.79[3]	0.00[2]	0.00[2]	0.06[2]	1.26[3]	3.86[3]

NOTES:

1 Deflection exceeds L/120
2 Deflection exceeds L/240
3 Deflection exceeds L/360
6 Deflection exceeds L/600
7 Deflection exceeds L/720
Axial Load Multiplier = 1
Lateral Load Multiplier - Strength = 1
Lateral Load Multiplier - Deflection = 1.0

Allowable Combined Axial and Bending Loads 30psf lateral load

Wall	Spacing	600S137-mils (Fy)					600S162-mils (Fy)				
Ht. (ft)	(in) o.c.	-33 (33)	-43 (33)	-54 (50)	-68 (50)	-97 (50)	-33 (33)	-43 (33)	-54 (50)	-68 (50)	-97 (50)
8	12	1.19	1.95	3.34	4.58	7.14	1.73	2.77	2.02	6.87	10.83
	16	0.97	1.73	3.15	4.40	6.99	1.47	2.53	4.79	6.65	10.61
	24	0.53	1.30	2.78	4.04	6.67	0.95	2.05	4.33	6.21	10.17
9	12	1.01	1.76	3.17	4.42	7.00	1.51	2.56	4.81	6.67	10.62
	16	0.73	1.48	2.93	4.18	6.80	1.18	2.25	4.51	6.38	10.34
	24	0.19	0.95	2.47	3.72	6.39	0.54	1.65	3.94	5.81	9.77
10	12	0.80	1.55	2.98	4.23	6.83	1.26	2.32	4.57	6.42	10.37
	16	0.47	1.22	2.69	3.94	6.58	0.86	1.94	4.20	6.06	10.01
	24	0.00[6]	0.57	2.12	3.37	6.07	0.11[7]	1.22	3.49	5.36	9.30
12	12	0.35[7]	1.08	2.54	3.78	6.41	0.70	1.75	3.94	5.82	9.73
	16	0.00[6]	0.63[7]	2.13	3.36	6.03	0.19[6]	1.24	3.43	5.29	9.18
	24	0.00[3]	0.00[6]	1.35 [6]	2.56[7]	5.30	0.00[6]	0.31[6]	2.47[7]	4.31	8.14
14	12	0.00[6]	0.57[6]	2.02 [7]	3.22	5.87	0.14[6]	1.12[7]	3.11	4.87	8.83
	16	0.00[3]	0.01[6]	1.50 [6]	2.68[7]	5.35	0.00[6]	0.52[6]	2.49[6]	4.21	8.09
	24	0.00[2]	0.00[3]	0.54 [3]	1.68[6]	4.38	0.00[3]	0.00[3]	1.38[6]	3.02[6]	6.74[7]
16	12	0.00[3]	0.05[6]	1.47 [6]	2.61[6]	5.21	0.00[3]	0.51[6]	2.28[6]	3.82[7]	7.28
	16	0.00[2]	0.00[3]	0.85 [3]	1.95[6]	4.56	0.00[3]	0.00[3]	1.60[6]	3.09[6]	6.44[7]
	24	0.00[2]	0.00[2]	0.00 [2]	0.79[3]	3.38	0.00[2]	0.00[2]	0.40[3]	1.80[3]	4.95[6]

Wall	Spacing	600S200-mils (Fy)					600S250-mils (Fy)			
Ht. (ft)	(in) o.c.	-33 (33)	-43 (33)	-54 (50)	-68 (50)	-97 (50)	-43 (33)	-54 (50)	-68 (50)	-97 (50)
8	12	2.15	3.56	6.71	9.27	14.95	3.89	6.92	10.27	17.50
	16	1.88	3.27	6.42	9.00	14.67	3.59	6.63	9.96	17.19
	24	1.34	2.69	5.84	8.45	14.12	3.00	6.07	9.35	16.58
9	12	1.90	3.27	6.35	8.89	14.48	3.60	6.58	9.84	16.91
	16	1.56	2.91	5.98	8.54	14.12	3.22	6.22	8.45	16.51
	24	0.90	2.20	5.26	7.85	13.42	2.49	5.52	8.68	15.73
10	12	1.63	2.96	5.94	8.45	13.91	3.28	6.20	9.35	16.22
	16	1.22	2.51	5.49	8.01	13.47	2.82	5.75	8.86	15.72
	24	0.44	1.67	4.62	7.18	12.60	1.95	4.90	7.92	14.76
12	12	1.03	2.24	4.98	7.37	12.50	2.55	5.29	8.18	14.53
	16	0.50[7]	1.66	4.37	6.77	11.86	1.94	4.69	7.51	13.82
	24	0.00[6]	0.57[6]	3.24	5.65	10.65	0.80[7]	3.56	6.24	12.49
14	12	0.42[6]	1.48	3.92	6.12	10.77	1.76	4.30	6.85	12.53
	16	0.00[6]	0.79[6]	3.19[7]	5.39	9.97	1.03[7]	3.56	6.02	11.54
	24	0.00[3]	0.00[6]	1.88[6]	4.06[6]	8.49	0.00[6]	2.21[6]	4.51[7]	10.00
16	12	0.00[6]	0.76[6]	2.88[7]	4.84	8.92	1.00[6]	3.32[7]	5.51	10.43
	16	0.00[3]	0.00[6]	2.09[6]	4.03[6]	8.01	0.17[6]	2.47[6]	4.56[7]	9.40
	24	0.00[2]	0.00[3]	0.70[3]	2.59[6]	6.37[6]	0.00[3]	0.98[3]	2.90[6]	7.59[6]

NOTES:

1 Deflection exceeds L/120
2 Deflection exceeds L/240
3 Deflection exceeds L/360
6 Deflection exceeds L/600
7 Deflection exceeds L/720
Axial Load Multiplier = 1
Lateral Load Multiplier - Strength = 1
Lateral Load Multiplier - Deflection = 1.0

Allowable Combined Axial and Bending Loads 30psf lateral load

Wall	Spacing	800S137-mils (Fy)					800S162-mils (Fy)				
Ht. (ft)	(in) o.c.	-33 (33)	-43 (33)	-54 (50)	-68 (50)	-97 (50)	-33 (33)	-43 (33)	-54 (50)	-68 (50)	-97 (50)
8	12	1.30	2.03	3.25	4.44	6.93	1.90	2.89	5.01	6.83	10.85
	16	1.14	1.88	3.12	4.32	6.81	1.71	2.70	4.84	6.67	10.69
	24	0.82	1.57	2.87	4.08	6.59	1.33	2.33	4.50	6.34	10.37
9	12	1.17	1.91	3.14	4.34	6.83	1.75	2.73	4.87	6.69	10.71
	16	0.96	1.71	2.98	4.18	6.68	1.50	2.50	4.65	6.48	10.51
	24	0.56	1.32	2.66	3.88	6.39	1.02	2.03	4.22	6.07	10.09
10	12	1.02	1.76	3.02	4.22	6.72	1.57	2.56	4.70	6.53	10.55
	16	0.77	1.52	2.83	4.03	6.54	1.27	2.27	4.43	6.27	10.29
	24	0.28	1.04	2.43	3.65	6.18	0.68	1.70	3.91	5.75	9.78
12	12	0.68	1.43	2.74	3.95	6.45	1.16	2.15	4.31	6.14	10.16
	16	0.33	1.09	2.46	3.67	6.19	0.74	1.74	3.93	5.76	9.77
	24	0.00[7]	0.42	1.90	3.12	5.66	0.00	0.94	3.17	5.01	9.02
14	12	0.29	1.04	2.40	3.61	6.12	0.69	1.68	3.84	5.66	9.65
	16	0.00[7]	0.59	2.02	3.24	5.76	0.15[7]	1.14	3.32	5.14	9.12
	24	0.00[6]	0.00[6]	1.28[7]	2.50	5.04	0.00[6]	0.12[7]	2.33	4.14	8.08
16	12	0.00[6]	0.61	2.02	3.22	5.73	0.19[7]	1.15	3.29	5.09	9.03
	16	0.00[6]	0.06[6]	1.53[7]	2.73	5.24	0.00[6]	0.49[7]	2.63	4.42	8.33
	24	0.00[3]	0.00[6]	0.61[6]	1.81[6]	4.31	0.00[3]	0.00[6]	1.41[6]	3.16[7]	6.99

Wall	Spacing	800S200-mils (Fy)					800S250-mils (Fy)			
Ht. (ft)	(in) o.c.	-33 (33)	-43 (33)	-54 (50)	-68 (50)	-97 (50)	-43 (33)	-54 (50)	-68 (50)	-97 (50)
8	12	2.44	3.93	7.21	9.80	15.51	4.33	7.63	11.23	19.21
	16	2.23	3.71	6.99	9.60	15.33	4.10	7.42	11.00	18.99
	24	1.82	3.28	6.57	9.21	14.96	3.65	6.99	10.55	18.55
9	12	2.27	3.74	7.02	9.63	15.35	4.13	7.42	10.99	18.93
	16	2.01	3.47	6.75	9.38	15.11	3.84	7.14	10.70	18.65
	24	1.49	2.92	6.21	8.88	14.63	3.28	6.60	10.12	18.08
10	12	2.07	3.54	6.81	9.43	15.16	3.90	7.17	10.71	18.60
	16	1.75	3.20	6.47	9.12	14.85	3.55	6.83	10.35	18.24
	24	1.12	2.53	5.80	8.50	14.25	2.86	6.16	9.64	17.53
12	12	1.63	3.05	6.30	8.95	14.68	3.37	6.56	10.03	17.76
	16	1.17	2.57	5.81	8.49	14.22	2.87	6.08	9.50	17.23
	24	0.30	1.64	4.85	7.59	13.33	1.91	5.14	8.48	16.18
14	12	1.10	2.46	5.59	8.29	14.05	2.74	5.82	9.12	16.56
	16	0.52	1.83	4.94	7.66	13.41	2.10	5.18	8.42	15.84
	24	0.00[6]	0.64	3.69	6.45	12.17	0.87	3.96	7.07	14.43
16	12	0.54	1.79	4.71	7.30	12.92	2.06	4.98	8.03	15.00
	16	0.00[6]	1.03	3.91	6.52	12.09	1.27	4.19	7.15	14.08
	24	0.00[6]	0.37[6]	2.42[7]	5.06	10.53	0.00[6]	2.73[7]	5.52	12.33

NOTES:

1 Deflection exceeds L/120
2 Deflection exceeds L/240
3 Deflection exceeds L/360
6 Deflection exceeds L/600
7 Deflection exceeds L/720
Axial Load Multiplier = 1
Lateral Load Multiplier - Strength = 1
Lateral Load Multiplier - Deflection = 1.0

Allowable Combined Axial and Bending Loads 30psf lateral load

Wall	Spacing	1000S162-mils (Fy)				1000S200-mils (Fy)				1000S250-mils (Fy)			
Ht. (ft)	(in) o.c.	-43 (33)	-54 (50)	-68 (50)	-97 (50)	-43 (33)	-54 (50)	-68 (50)	-97 (50)	-43 (33)	-54 (50)	-68 (50)	-97 (50)
8	12	2.91	4.88	6.64	10.57	4.01	7.19	9.71	15.39	4.51	7.84	11.47	19.48
	16	2.77	4.75	6.52	10.45	3.84	7.03	9.55	15.24	4.33	7.67	11.30	19.32
	24	2.48	4.50	6.28	10.21	3.51	6.70	9.24	14.94	3.97	7.34	10.95	18.98
9	12	2.79	4.77	6.54	10.47	3.87	7.05	9.57	15.27	4.36	7.70	11.32	19.34
	16	2.61	4.61	6.39	10.32	3.66	6.84	9.37	15.07	4.13	7.49	11.10	19.13
	24	2.24	4.29	6.07	10.02	3.23	6.43	8.97	14.68	3.68	7.06	10.65	18.70
10	12	2.66	4.65	6.43	10.36	3.71	6.90	9.42	15.12	4.20	7.54	11.16	19.18
	16	2.43	4.45	6.23	10.17	3.45	6.64	9.17	14.88	3.91	7.28	10.88	18.91
	24	1.98	4.05	5.84	9.80	2.92	6.12	8.68	14.39	3.36	6.75	10.32	18.37
12	12	2.35	4.37	6.15	10.09	3.35	6.53	9.06	14.76	3.81	7.16	10.75	18.78
	16	2.02	4.08	5.87	9.82	2.96	6.15	8.70	14.41	3.40	6.77	10.34	18.38
	24	1.38	3.50	5.31	9.27	2.21	5.41	7.97	13.69	2.60	6.01	9.53	17.58
14	12	1.98	4.03	5.82	9.76	2.91	6.08	8.62	14.32	3.33	6.67	10.23	18.27
	16	1.54	3.63	5.43	9.38	2.39	5.56	8.12	13.82	2.78	6.14	9.66	17.71
	24	0.68	2.85	4.66	8.63	1.39	4.55	7.12	12.83	1.72	5.10	8.55	16.61
16	12	1.55	3.63	5.42	9.36	2.40	5.54	8.09	13.77	2.77	6.03	9.50	17.45
	16	1.00	3.11	4.91	8.86	1.74	4.87	7.42	13.10	2.08	5.35	8.77	16.70
	24	0.00	2.11	3.92	7.88	0.49	3.59	6.14	11.80	0.76	4.04	7.35	15.25

Wall	Spacing	1200S162-mils (Fy)			1200S200-mils (Fy)			1200S250-mils (Fy)		
Ht. (ft)	(in) o.c.	-54 (50)	-68 (50)	-97 (50)	-54 (50)	-68 (50)	-97 (50)	-54 (50)	-68 (50)	-97 (50)
8	12	4.69	6.38	10.15	6.39	9.35	15.16	7.38	10.77	19.13
	16	4.59	6.28	10.05	6.27	9.22	15.04	7.25	10.64	18.99
	24	4.38	6.08	9.87	6.04	8.97	14.80	6.99	10.37	18.70
9	12	4.61	6.30	10.07	6.30	9.25	15.06	7.27	10.66	19.01
	16	4.48	6.17	9.95	6.15	9.38	14.91	7.11	10.49	18.83
	24	4.21	5.92	9.72	5.85	9.10	14.60	6.79	10.15	18.47
10	12	4.51	6.21	9.99	6.19	9.13	14.95	7.16	10.53	18.88
	16	4.35	6.05	9.84	6.01	8.93	14.76	6.96	10.32	18.65
	24	4.02	5.74	9.55	5.64	8.54	14.37	6.56	9.90	18.20
12	12	4.29	6.00	9.79	5.95	8.86	14.68	6.90	10.24	18.56
	16	4.05	5.77	9.57	5.68	8.57	14.40	6.61	9.93	18.22
	24	3.58	5.32	9.15	5.15	8.00	13.84	6.04	9.31	17.56
14	12	4.02	5.74	9.54	5.66	8.52	14.35	6.59	9.88	18.16
	16	3.69	5.43	9.25	5.30	8.13	13.96	6.20	9.45	17.69
	24	3.05	4.82	8.67	4.57	7.34	13.19	5.42	8.60	16.77
16	12	3.70	5.43	9.25	5.33	8.13	13.95	6.23	9.45	17.67
	16	3.28	5.03	8.87	4.85	7.61	13.43	5.72	8.88	17.06
	24	2.45	4.23	8.11	3.91	6.58	12.41	4.70	7.77	15.84

NOTES:

1 Deflection exceeds L/120
2 Deflection exceeds L/240
3 Deflection exceeds L/360
6 Deflection exceeds L/600
7 Deflection exceeds L/720
Axial Load Multiplier = 1
Lateral Load Multiplier - Strength = 1
Lateral Load Multiplier - Deflection = 1.0

Allowable Combined Axial and Bending Loads 40psf lateral load

Wall	Spacing	250S137-mils (Fy)					250S162-mils (Fy)				
Ht. (ft)	(in) o.c.	-33 (33)	-43 (33)	-54 (50)	-68 (50)	-97 (50)	-33 (33)	-43 (33)	-54 (50)	-68 (50)	-97 (50)
8	12	0.00[2]	0.19[3]	0.92[3]	1.48[6]	2.66[6]	0.00[3]	0.40[3]	1.24[6]	1.87[6]	3.21[7]
	16	0.00[2]	0.00[2]	0.62[3]	1.15[3]	2.26[6]	0.00[2]	0.03[3]	0.92[3]	1.53[6]	2.80[6]
	24	0.00[1]	0.00[2]	0.10[2]	0.58[2]	1.56[3]	0.00[2]	0.00[2]	0.35[2]	0.91[3]	2.07[3]
9	12	0.00[2]	0.00[2]	0.60[3]	1.06[3]	1.99[6]	0.00[2]	0.09[2]	0.86[3]	1.38[3]	2.46[6]
	16	0.00[1]	0.00[2]	0.29[2]	0.73[2]	1.59[3]	0.00[2]	0.00[2]	0.52[2]	1.03[3]	2.05[3]
	24	0.00[1]	0.00[1]	0.00[2]	0.15[2]	0.90[2]	0.00[1]	0.00[1]	0.00[2]	0.40[2]	1.32[2]
10	12	0.00[1]	0.00[2]	0.33[2]	0.71[2]	1.45[3]	0.00[2]	0.00[2]	0.54[2]	0.98[3]	1.86[3]
	16	0.00[1]	0.00[1]	0.03[2]	0.38[2]	1.07[2]	0.00[1]	0.00[2]	0.21[2]	0.62[2]	1.45[3]
	24	0.00[1]	0.00[1]	0.00[1]	0.00[1]	0.40[2]	0.00[1]	0.00[1]	0.00[1]	0.02[2]	0.74[2]
12	12	0.00[1]	0.00[1]	0.00[1]	0.22[2]	0.70[2]	0.00[1]	0.00[1]	0.09[2]	0.39[2]	0.99[2]
	16	0.00[1]	0.00[1]	0.00[1]	0.00[1]	0.35[2]	0.00[1]	0.00[1]	0.00[1]	0.06[1]	0.61[2]
	24	0.00[1]	0.00[1]	0.00[1]	0.00[1]	0.00[1]	0.00[1]	0.00[1]	0.00[1]	0.00[1]	0.00[1]
14	12	0.00[1]	0.00[1]	0.00[1]	0.00[1]	0.25[1]	0.00[1]	0.00[1]	0.00[1]	0.03[1]	0.44[2]
	16	0.00[1]	0.00[1]	0.00[1]	0.00[1]	0.00[1]	0.00[1]	0.00[1]	0.00[1]	0.00[1]	0.10[1]
	24	0.00[1]	0.00[1]	0.00[1]	0.00[1]	0.00[1]	0.00[1]	0.00[1]	0.00[1]	0.00[1]	0.00[1]
16	12	0.00[1]	0.00[1]	0.00[1]	0.00[1]	0.00[1]	0.00[1]	0.00[1]	0.00[1]	0.00[1]	0.10[1]
	16	0.00[1]	0.00[1]	0.00[1]	0.00[1]	0.00[1]	0.00[1]	0.00[1]	0.00[1]	0.00[1]	0.00[1]
	24	0.00[1]	0.00[1]	0.00[1]	0.00[1]	0.00[1]	0.00[1]	0.00[1]	0.00[1]	0.00[1]	0.00[1]

Wall	Spacing	350S137-mils (Fy)					350S137-mils (Fy)				
Ht. (ft)	(in) o.c.	-33 (33)	-43 (33)	-54 (50)	-68 (50)	-97 (50)	-33 (33)	-43 (33)	-54 (50)	-68 (50)	-97 (50)
8	12	0.18[6]	0.73[7]	1.96	2.87	4.80	0.43[6]	1.11[7]	2.64	3.72	6.15
	16	0.00[6]	0.30[6]	1.56[6]	2.45[7]	4.40	0.00[6]	0.65[6]	2.20[7]	3.26	5.69
	24	0.00[3]	0.00[3]	0.83[6]	1.68[6]	3.64[7]	0.00[3]	0.00[3]	1.39[6]	2.42[6]	4.84
9	12	0.00[3]	0.36[6]	1.51[6]	2.33[7]	4.31	0.07[6]	0.69[6]	2.08[7]	3.06	5.28
	16	0.00[3]	0.00[3]	1.06[6]	1.86[6]	3.82[7]	0.00[3]	0.17[6]	1.60[6]	2.55[6]	4.75
	24	0.00[2]	0.00[2]	0.28[3]	1.01[3]	2.92[6]	0.00[2]	0.00[3]	0.72[3]	1.63[6]	3.80[6]
10	12	0.00[3]	0.02[3]	1.08[6]	1.80[6]	3.56[7]	0.00[3]	0.29[6]	1.56[6]	2.43[6]	4.41
	16	0.00[2]	0.00[2]	0.61[3]	1.30[3]	3.03[6]	0.00[2]	0.00[3]	1.05[3]	1.89[6]	3.84[6]
	24	0.00[2]	0.00[2]	0.00[2]	0.42[2]	2.09[3]	0.00[2]	0.00[2]	0.15[2]	0.93[3]	2.83[6]
12	12	0.00[2]	0.00[2]	0.38[2]	0.91[3]	2.23[6]	0.00[2]	0.00[2]	0.70[3]	1.35[3]	2.86[6]
	16	0.00[1]	0.00[2]	0.00[2]	0.41[2]	1.70[3]	0.00[2]	0.00[2]	0.20[2]	0.81[3]	2.29[3]
	24	0.00[1]	0.00[1]	0.00[1]	0.00[2]	0.78[2]	0.00[1]	0.00[1]	0.00[2]	0.00[2]	1.29[2]
14	12	0.00[1]	0.00[1]	0.00[2]	0.29[2]	1.29[2]	0.00[1]	0.00[2]	0.13[2]	0.60[2]	1.75[3]
	16	0.00[1]	0.00[1]	0.00[1]	0.00[2]	0.79[2]	0.00[1]	0.00[1]	0.00[2]	0.09[2]	1.21[2]
	24	0.00[1]	0.00[1]	0.00[1]	0.00[1]	0.00[1]	0.00[1]	0.00[1]	0.00[1]	0.00[1]	0.28[2]
16	12	0.00[1]	0.00[1]	0.00[1]	0.00[1]	0.66[2]	0.00[1]	0.00[1]	0.00[1]	0.11[2]	0.99[2]
	16	0.00[1]	0.00[1]	0.00[1]	0.00[1]	0.20[1]	0.00[1]	0.00[1]	0.00[1]	0.00[1]	0.49[2]
	24	0.00[1]	0.00[1]	0.00[1]	0.00[1]	0.00[1]	0.00[1]	0.00[1]	0.00[1]	0.00[1]	0.00[1]

NOTES:

1 Deflection exceeds L/120
2 Deflection exceeds L/240
3 Deflection exceeds L/360
6 Deflection exceeds L/600
7 Deflection exceeds L/720
Axial Load Multiplier = 1
Lateral Load Multiplier - Strength = 1
Lateral Load Multiplier - Deflection = 1.0

Allowable Combined Axial and Bending Loads 40psf lateral load

Wall	Spacing	362S137-mils (Fy)					362S162-mils (Fy)				
Ht. (ft)	(in) o.c.	-33 (33)	-43 (33)	-54 (50)	-68 (50)	-97 (50)	-33 (33)	-43 (33)	-54 (50)	-68 (50)	-97 (50)
8	12	0.24[6]	0.81[7]	2.11	3.10	4.99	0.50[7]	1.21	2.82	4.01	6.57
	16	0.00[6]	0.38[6]	1.71[7]	2.67	4.59	0.06[6]	0.75[6]	2.37[7]	3.54	6.11
	24	0.00[3]	0.00[3]	0.97[6]	1.88[6]	3.85[7]	0.00[3]	0.00[6]	1.56[6]	2.68[6]	5.25
9	12	0.00[6]	0.44[6]	1.66[6]	2.55[7]	4.56	0.13[6]	0.78[6]	2.27[7]	3.34	5.71
	16	0.00[3]	0.00[3]	1.21[6]	2.07[6]	4.07[7]	0.00[3]	0.26[6]	1.77[6]	2.82[7]	5.17
	24	0.00[2]	0.00[2]	0.39[3]	1.19[3]	3.17[6]	0.00[2]	0.00[3]	0.87[3]	1.86[6]	4.19[6]
10	12	0.00[3]	0.09[3]	1.22[6]	2.01[6]	3.91[7]	0.00[3]	0.38[6]	1.74[6]	2.69[7]	4.82
	16	0.00[2]	0.00[3]	0.74[3]	1.49[6]	3.36[6]	0.00[2]	0.00[3]	1.21[6]	2.12[6]	4.24[7]
	24	0.00[2]	0.00[2]	0.00[2]	0.57[3]	2.38[3]	0.00[2]	0.00[2]	0.27[3]	1.12[3]	3.19[6]
12	12	0.00[2]	0.00[2]	0.48[3]	1.06[3]	2.52[6]	0.00[2]	0.00[2]	0.84[3]	1.55[3]	3.20[6]
	16	0.00[1]	0.00[2]	0.00[2]	0.54[2]	1.96[3]	0.00[2]	0.00[2]	0.30[2]	0.97[3]	2.60[3]
	24	0.00[1]	0.00[1]	0.00[2]	0.00[2]	0.99[2]	0.00[1]	0.00[1]	0.00[2]	0.00[2]	1.55[2]
14	12	0.00[1]	0.00[2]	0.00[2]	0.39[2]	1.49[3]	0.00[1]	0.00[2]	0.21[2]	0.73[2]	2.00[3]
	16	0.00[1]	0.00[1]	0.00[1]	0.00[2]	0.96[2]	0.00[1]	0.00[1]	0.00[2]	0.19[2]	1.43[2]
	24	0.00[1]	0.00[1]	0.00[1]	0.00[1]	0.06[2]	0.00[1]	0.00[1]	0.00[1]	0.00[1]	0.44[2]
16	12	0.00[1]	0.00[1]	0.00[1]	0.00[2]	0.80[2]	0.00[1]	0.00[1]	0.00[2]	0.19[2]	1.17[2]
	16	0.00[1]	0.00[1]	0.00[1]	0.00[1]	0.31[2]	0.00[1]	0.00[1]	0.00[1]	0.00[1]	0.64[2]
	24	0.00[1]	0.00[1]	0.00[1]	0.00[1]	0.00[1]	0.00[1]	0.00[1]	0.00[1]	0.00[1]	0.00[1]

Wall	Spacing	362S200-mils (Fy)					362S250-mils (Fy)			
Ht. (ft)	(in) o.c.	-33 (33)	-43 (33)	-54 (50)	-68 (50)	-97 (50)	-43 (33)	-54 (50)	-68 (50)	-97 (50)
8	12	0.74[7]	1.71	3.65	5.18	8.17	2.03	4.19	6.08	9.59
	16	0.25[6]	1.20[7]	3.14	4.67	7.68	1.47	3.64	5.50	9.07
	24	0.00[3]	0.26[6]	2.19[6]	3.72[7]	6.76	0.45[6]	2.62[7]	4.43	8.09
9	12	0.32[6]	1.21[7]	2.97	4.37	7.14	1.49	3.49	5.15	8.44
	16	0.00[6]	0.64[6]	2.40[6]	3.79	6.57	0.86[6]	2.86[7]	4.49	7.83
	24	0.00[3]	0.00[3]	1.36[6]	2.73[6]	5.51[7]	0.00[6]	1.72[6]	3.30[6]	6.70
10	12	0.00[6]	0.74[6]	2.32[6]	3.58[7]	6.10	0.97[6]	2.81[7]	4.24	7.28
	16	0.00[3]	0.13[3]	1.71[6]	2.95[6]	5.47	0.28[6]	2.12[6]	3.54[7]	6.60
	24	0.00[2]	0.00[2]	0.64[3]	1.85[3]	4.34[6]	0.00[3]	0.91[3]	2.27[6]	5.38[6]
12	12	0.00[2]	0.00[3]	1.21[3]	2.19[6]	4.17[6]	0.06[3]	1.53[6]	2.64[6]	5.10[7]
	16	0.00[2]	0.00[2]	0.60[3]	1.55[3]	3.51[6]	0.00[2]	0.83[3]	1.91[6]	4.38[6]
	24	0.00[1]	0.00[2]	0.00[2]	0.45[2]	2.36[3]	0.00[2]	0.00[2]	0.65[3]	3.11[3]
14	12	0.00[2]	0.00[2]	0.43[2]	1.18[3]	2.71[3]	0.00[2]	0.61[3]	1.46[3]	3.40[6]
	16	0.00[1]	0.00[2]	0.00[2]	0.58[2]	2.08[3]	0.00[2]	0.00[2]	0.77[2]	2.71[3]
	24	0.00[1]	0.00[1]	0.00[1]	0.00[2]	1.00[2]	0.00[1]	0.00[2]	0.00[2]	1.50[2]
16	12	0.00[1]	0.00[1]	0.00[2]	0.50[2]	1.70[2]	0.00[2]	0.00[2]	0.66[2]	2.21[3]
	16	0.00[1]	0.00[1]	0.00[1]	0.00[2]	1.12[2]	0.00[1]	0.00[2]	0.02[2]	1.55[2]
	24	0.00[1]	0.00[1]	0.00[1]	0.00[1]	0.11[1]	0.00[1]	0.00[1]	0.00[1]	0.43[2]

NOTES:

1 Deflection exceeds L/120
2 Deflection exceeds L/240
3 Deflection exceeds L/360
6 Deflection exceeds L/600
7 Deflection exceeds L/720
Axial Load Multiplier = 1
Lateral Load Multiplier - Strength = 1
Lateral Load Multiplier - Deflection = 1.0

Allowable Combined Axial and Bending Loads 40psf lateral load

Wall	Spacing	400S137-mils (Fy)					400S162-mils (Fy)				
Ht. (ft)	(in) o.c.	-33 (33)	-43 (33)	-54 (50)	-68 (50)	-97 (50)	-33 (33)	-43 (33)	-54 (50)	-68 (50)	-97 (50)
8	12	0.40[7]	1.04	2.50	3.72	5.49	0.70	1.50	3.32	4.81	7.82
	16	0.00[6]	0.62[7]	2.10	3.28	5.13	0.26[6]	1.03	2.87	4.33	7.36
	24	0.00[3]	0.00[6]	1.35[6]	2.47[7]	4.45	0.00[6]	0.18[6]	2.04[7]	3.44	6.48
9	12	0.07[6]	0.67[6]	2.06	3.21	5.12	0.33[6]	1.07[7]	2.78	4.16	6.98
	16	0.00[3]	0.18[6]	1.59[6]	2.70[7]	4.67	0.00[6]	0.53[6]	2.26[7]	3.60	6.42
	24	0.00[2]	0.00[3]	0.74[6]	1.75[6]	3.82[7]	0.00[3]	0.00[3]	1.32[6]	2.57[6]	5.39[7]
10	12	0.00[3]	0.30[6]	1.61[6]	2.65[7]	4.68	0.00[6]	0.64[6]	2.24[7]	3.48	6.08
	16	0.00[3]	0.00[3]	1.09[6]	2.07[6]	4.14[7]	0.00[3]	0.06[6]	1.67[6]	2.86[6]	5.45
	24	0.00[2]	0.00[2]	0.18[3]	1.05[3]	3.15[6]	0.00[2]	0.00[3]	0.66[3]	1.75[6]	4.32[6]
12	12	0.00[2]	0.00[3]	0.79[3]	1.58[6]	3.45[6]	0.00[2]	0.00[3]	1.25[3]	2.20[6]	4.32[6]
	16	0.00[2]	0.00[2]	0.23[2]	0.96[3]	2.81[6]	0.00[2]	0.00[2]	0.64[3]	1.53[3]	3.63[6]
	24	0.00[1]	0.00[2]	0.00[2]	0.00[2]	1.69[3]	0.00[1]	0.00[2]	0.00[2]	0.38[2]	2.42[3]
14	12	0.00[2]	0.00[2]	0.16[2]	0.73[2]	2.19[3]	0.00[2]	0.00[2]	0.48[2]	1.18[3]	2.84[6]
	16	0.00[1]	0.00[1]	0.00[2]	0.14[2]	1.57[2]	0.00[1]	0.00[2]	0.00[2]	0.55[2]	2.17[3]
	24	0.00[1]	0.00[1]	0.00[1]	0.00[1]	0.51[2]	0.00[1]	0.00[1]	0.00[1]	0.00[2]	1.02[2]
16	12	0.00[1]	0.00[1]	0.00[2]	0.15[2]	1.29[2]	0.00[1]	0.00[2]	0.00[2]	0.48[2]	1.77[3]
	16	0.00[1]	0.00[1]	0.00[1]	0.00[2]	0.72[2]	0.00[1]	0.00[1]	0.00[1]	0.00[2]	1.15[2]
	24	0.00[1]	0.00[1]	0.00[1]	0.00[1]	0.00[1]	0.00[1]	0.00[1]	0.00[1]	0.00[1]	0.09[2]

Wall	Spacing	400S200-mils (Fy)					400S250-mils (Fy)			
Ht. (ft)	(in) o.c.	-33 (33)	-43 (33)	-54 (50)	-68 (50)	-97 (50)	-43 (33)	-54 (50)	-68 (50)	-97 (50)
8	12	0.97	2.06	4.28	6.14	9.68	2.38	4.74	7.04	11.33
	16	0.49[7]	1.55	3.76	5.62	9.19	1.84	4.21	6.47	10.81
	24	0.00[6]	0.61[6]	2.80[7]	4.64	8.25	0.83[7]	3.21	5.39	9.81
9	12	0.55[7]	1.56	3.61	5.35	8.67	1.85	4.12	6.24	10.20
	16	0.00[6]	0.98[7]	3.01	4.74	8.08	1.22[7]	3.48	5.55	9.57
	24	0.00[3]	0.00[6]	1.93[6]	3.62[7]	6.98	0.07[6]	2.32[6]	4.29[7]	8.39
10	12	0.15[6]	1.07[6]	2.94	4.54	7.61	1.33[7]	3.44	5.35	9.01
	16	0.00[3]	0.43[6]	2.29[6]	3.86[7]	6.94	0.63[6]	2.73[7]	4.58	8.29
	24	0.00[2]	0.00[3]	1.13[6]	2.64[6]	5.71[7]	0.00[3]	1.46[6]	3.19[6]	6.97[7]
12	12	0.00[3]	0.20[3]	1.73[6]	3.00[6]	5.52[7]	0.36[6]	2.14[6]	3.59[7]	6.66
	16	0.00[2]	0.00[3]	1.03[3]	2.27[6]	4.78[6]	0.00[3]	1.35[6]	2.75[6]	5.84[7]
	24	0.00[2]	0.00[2]	0.00[2]	1.00[3]	3.46[3]	0.00[2]	0.00[3]	1.30[3]	4.40[6]
14	12	0.00[2]	0.00[2]	0.79[3]	1.76[3]	3.75[6]	0.00[3]	1.04[3]	2.15[6]	4.63[6]
	16	0.00[2]	0.00[2]	0.12[2]	1.06[3]	3.02[3]	0.00[2]	0.28[2]	1.33[3]	3.82[6]
	24	0.00[1]	0.00[1]	0.00[2]	0.00[2]	1.75[2]	0.00[2]	0.00[2]	0.00[2]	2.41[3]
16	12	0.00[1]	0.00[2]	0.14[2]	0.89[2]	2.46[3]	0.00[2]	0.27[2]	1.12[3]	3.11[3]
	16	0.00[1]	0.00[1]	0.00[2]	0.24[2]	1.77[2]	0.00[2]	0.00[2]	0.37[2]	2.35[3]
	24	0.00[1]	0.00[1]	0.00[1]	0.00[1]	0.60[2]	0.00[1]	0.00[1]	0.00[2]	1.03[2]

NOTES:

1 Deflection exceeds L/120
2 Deflection exceeds L/240
3 Deflection exceeds L/360
6 Deflection exceeds L/600
7 Deflection exceeds L/720
Axial Load Multiplier = 1
Lateral Load Multiplier - Strength = 1
Lateral Load Multiplier - Deflection = 1.0

Allowable Combined Axial and Bending Loads 40psf lateral load

Wall	Spacing	550S137-mils (Fy)					550S162-mils (Fy)				
Ht. (ft)	(in) o.c.	-33 (33)	-43 (33)	-54 (50)	-68 (50)	-97 (50)	-33 (33)	-43 (33)	-54 (50)	-68 (50)	-97 (50)
8	12	0.89	1.71	3.17	4.43	6.89	1.35	2.41	4.70	6.55	10.41
	16	0.57	1.42	2.91	4.18	6.64	0.98	2.06	4.36	6.21	10.08
	24	0.00[7]	0.84	2.40	3.69	6.16	0.26	1.37	3.69	5.56	9.42
9	12	0.62	1.46	2.94	4.21	6.66	1.03	2.09	4.36	6.23	10.08
	16	0.23	1.09	2.61	3.89	6.35	0.57	1.65	3.93	5.80	9.65
	24	0.00[6]	0.39[7]	1.98	3.27	5.74	0.00[6]	0.82	3.11	4.98	8.80
10	12	0.34	1.18	2.68	3.95	6.40	0.69	1.74	3.95	5.85	9.69
	16	0.00[6]	0.74[7]	2.28	3.55	6.01	0.16[7]	1.22	3.43	5.33	9.14
	24	0.00[6]	0.00[6]	1.52[6]	2.80[7]	5.25	0.00[6]	0.26[6]	2.46[7]	4.32	8.09
12	12	0.00[6]	0.58[6]	2.08[7]	3.33	5.74	0.00[6]	0.99[7]	3.01	4.76	8.67
	16	0.00[3]	0.01[6]	1.54[6]	2.78[7]	5.18	0.00[3]	0.34[6]	2.35[6]	4.07[7]	7.88
	24	0.00[2]	0.00[3]	0.56[3]	1.78[6]	4.13[6]	0.00[2]	0.00[3]	1.16[6]	2.80[6]	6.43[7]
14	12	0.00[3]	0.00[3]	1.42[6]	2.61[6]	4.93[7]	0.00[3]	0.26[6]	2.05[6]	3.59[6]	6.96
	16	0.00[2]	0.00[3]	0.78[3]	1.94[6]	4.21[6]	0.00[2]	0.00[3]	1.31[3]	2.79[6]	6.03[6]
	24	0.00[2]	0.00[2]	0.00[2]	0.74[3]	2.91[3]	0.00[2]	0.00[2]	0.00[2]	1.38[3]	4.39[6]
16	12	0.00[2]	0.00[2]	0.75[3]	1.85[3]	4.03[6]	0.00[2]	0.00[3]	1.19[3]	2.48[6]	5.29[6]
	16	0.00[2]	0.00[2]	0.05[2]	1.09[3]	3.18[3]	0.00[2]	0.00[2]	0.42[2]	1.64[3]	4.31[6]
	24	0.00[1]	0.00[1]	0.00[2]	0.00[2]	1.71[2]	0.00[1]	0.00[2]	0.00[2]	0.20[2]	2.62[3]

NOTES:

1 Deflection exceeds L/120
2 Deflection exceeds L/240
3 Deflection exceeds L/360
6 Deflection exceeds L/600
7 Deflection exceeds L/720
Axial Load Multiplier = 1
Lateral Load Multiplier - Strength = 1
Lateral Load Multiplier - Deflection = 1.0

Allowable Combined Axial and Bending Loads 40psf lateral load

Wall	Spacing	600S137-mils (Fy)					600S162-mils (Fy)				
Ht. (ft)	(in) o.c.	-33 (33)	-43 (33)	-54 (50)	-68 (50)	-97 (50)	-33 (33)	-43 (33)	-54 (50)	-68 (50)	-97 (50)
8	12	0.97	1.73	3.15	4.40	6.99	1.47	2.53	4.79	6.65	10.61
	16	0.68	1.44	2.90	4.16	6.78	1.12	2.20	4.48	6.35	10.32
	24	0.11	0.88	2.41	3.68	6.36	0.45	1.58	3.89	5.77	9.74
9	12	0.73	1.48	2.93	4.18	6.80	1.18	2.25	4.51	6.38	10.34
	16	0.37	1.13	2.62	3.88	6.53	0.75	1.85	4.13	6.00	9.96
	24	0.00[6]	0.43	2.01	3.27	6.00	0.00[7]	1.07	3.38	5.25	9.22
10	12	0.47	1.22	2.69	3.94	6.58	0.86	1.94	4.20	6.06	10.01
	16	0.04[7]	0.78	2.31	3.56	6.24	0.36	1.46	3.73	5.59	9.53
	24	0.00[6]	0.00[6]	1.57[7]	2.82	5.58	0.00[6]	0.54[7]	2.82	4.68	8.61
12	12	0.00[6]	0.63[7]	2.13	3.36	6.03	0.19[6]	1.24	3.43	5.29	9.18
	16	0.00[6]	0.06[6]	1.60[7]	2.82	5.54	0.00[6]	0.61[6]	2.78[7]	4.63	8.48
	24	0.00[3]	0.00[3]	0.63[6]	1.82[6]	4.60[7]	0.00[3]	0.00[6]	1.59[6]	3.39[6]	7.17
14	12	0.00[3]	0.01[6]	1.50[6]	2.68[7]	5.35	0.00[6]	0.52[6]	2.49[6]	4.21	8.09
	16	0.00[2]	0.00[3]	0.84[6]	2.00[6]	4.70[7]	0.00[3]	0.00[3]	1.73[6]	3.41[6]	7.17
	24	0.00[2]	0.00[2]	0.00[3]	0.77[3]	3.49[6]	0.00[2]	0.00[2]	0.38[3]	1.95[6]	5.51[6]
16	12	0.00[2]	0.00[3]	0.85[3]	1.95[6]	4.56[6]	0.00[3]	0.00[3]	1.60[6]	3.09[6]	6.44[7]
	16	0.00[2]	0.00[2]	0.10[3]	1.16[3]	3.76[6]	0.00[2]	0.00[2]	0.78[3]	2.21[6]	5.42[6]
	24	0.00[1]	0.00[2]	0.00[2]	0.00[2]	2.34[3]	0.00[2]	0.00[2]	0.00[2]	0.67[3]	3.64[3]

Wall	Spacing	600S200-mils (Fy)					600S250-mils (Fy)			
Ht. (ft)	(in) o.c.	-33 (33)	-43 (33)	-54 (50)	-68 (50)	-97 (50)	-43 (33)	-54 (50)	-68 (50)	-97 (50)
8	12	1.88	3.27	6.42	9.00	14.67	3.59	6.63	9.96	17.19
	16	1.52	2.88	6.03	8.63	14.30	3.19	6.26	9.55	16.78
	24	0.81	2.13	5.27	7.92	13.58	2.42	5.52	8.75	15.97
9	12	1.56	2.91	5.98	8.54	14.12	3.22	6.22	9.45	16.51
	16	1.12	2.43	5.49	8.08	13.65	2.73	5.75	8.93	15.99
	24	0.26	1.51	4.55	7.18	12.73	1.78	4.83	7.93	14.96
10	12	1.22	2.51	5.49	8.01	13.47	2.82	5.75	8.86	15.72
	16	0.69	1.94	4.90	7.45	12.89	2.23	5.18	8.23	15.07
	24	0.00[6]	0.86	3.78	6.37	11.76	1.11	4.08	7.02	13.82
12	12	0.50[7]	1.66	4.37	6.77	11.86	1.94	4.69	7.51	13.82
	16	0.00[6]	0.92[7]	3.60	6.01	11.05	1.17	3.92	6.65	12.92
	24	0.00[3]	0.00[6]	2.19[6]	4.60[7]	9.52	0.00[6]	2.50[7]	5.07	11.23
14	12	0.00[6]	0.79[6]	3.19[7]	5.39	9.97	1.03[7]	3.56	6.02	11.64
	16	0.00[3]	0.00[6]	2.30[6]	4.48[7]	8.96	0.12[6]	2.64[6]	4.99	10.53
	24	0.00[2]	0.00[3]	0.71[3]	2.85[6]	7.15[6]	0.00[3]	0.99[6]	3.13[6]	8.51[7]
16	12	0.00[3]	0.01[6]	2.09[6]	4.03[6]	8.01	0.17[6]	2.47[6]	4.56[7]	9.40
	16	0.00[2]	0.00[3]	1.14[3]	3.05[6]	6.89[6]	0.00[3]	1.46[6]	3.43[6]	8.17[7]
	24	0.00[2]	0.00[2]	0.00[2]	1.32[3]	4.94[6]	0.00[2]	0.00[3]	1.43[3]	5.99[6]

NOTES:

1 Deflection exceeds L/120
2 Deflection exceeds L/240
3 Deflection exceeds L/360
6 Deflection exceeds L/600
7 Deflection exceeds L/720
Axial Load Multiplier = 1
Lateral Load Multiplier - Strength = 1
Lateral Load Multiplier - Deflection = 1.0

Allowable Combined Axial and Bending Loads 40psf lateral load

Wall	Spacing	800S137-mils (Fy)					800S162-mils (Fy)				
Ht. (ft)	(in) o.c.	-33 (33)	-43 (33)	-54 (50)	-68 (50)	-97 (50)	-33 (33)	-43 (33)	-54 (50)	-68 (50)	-97 (50)
8	12	1.14	1.88	3.12	4.32	6.81	1.71	2.70	4.84	6.67	10.69
	16	0.92	1.67	2.95	4.16	6.66	1.46	2.45	4.62	6.45	10.48
	24	0.50	1.26	2.62	3.84	6.36	0.95	1.97	4.17	6.02	10.05
9	12	0.96	1.71	2.98	4.18	6.68	1.50	2.50	4.65	6.48	10.51
	16	0.69	1.45	2.77	3.98	6.49	1.18	2.19	4.37	6.21	10.23
	24	0.16	0.94	2.35	3.57	6.11	0.55	1.57	3.80	5.65	9.69
10	12	0.77	1.52	2.83	4.03	6.54	1.27	2.27	4.43	6.27	10.29
	16	0.44	1.20	2.56	3.78	6.30	0.88	1.89	4.08	5.92	9.95
	24	0.00	0.58	2.04	3.28	5.82	0.11	1.14	3.39	5.24	9.27
12	12	0.33	1.09	2.46	3.67	6.19	0.74	1.74	3.93	5.76	9.77
	16	0.00	0.64	2.08	3.30	5.84	0.20	1.21	3.42	5.26	9.27
	24	0.00[6]	0.00[7]	1.35	2.59	5.14	0.00[6]	0.18	2.44	4.29	8.28
14	12	0.00[7]	0.59	2.02	3.24	5.76	0.15[7]	1.14	3.32	5.14	9.12
	16	0.00[6]	0.01[7]	1.52	2.74	5.27	0.00[6]	0.45[7]	2.65	4.47	8.42
	24	0.00[3]	0.00[6]	0.57[6]	1.80[7]	4.34	0.00[3]	0.00[6]	1.39[6]	3.18	7.09
16	12	0.00[6]	0.06[6]	1.53[7]	2.73	5.24	0.00[6]	0.49[7]	2.63	4.42	8.33
	16	0.00[3]	0.00[6]	0.91[6]	2.11[7]	4.62	0.00[3]	0.00[6]	1.81[6]	3.57	7.43
	24	0.00[2]	0.00[3]	0.00[3]	0.94[6]	3.43[6]	0.00[2]	0.00[3]	0.29[6]	2.00[6]	5.74[7]

Wall	Spacing	800S200-mils (Fy)					800S250-mils (Fy)			
Ht. (ft)	(in) o.c.	-33 (33)	-43 (33)	-54 (50)	-68 (50)	-97 (50)	-43 (33)	-54 (50)	-68 (50)	-97 (50)
8	12	2.23	3.71	6.99	9.60	15.33	4.10	7.42	11.00	18.99
	16	1.96	3.42	6.71	9.34	15.08	3.80	7.13	10.70	18.69
	24	1.41	2.85	6.15	8.83	14.59	3.21	6.57	10.10	18.11
9	12	2.01	3.47	6.75	9.38	15.11	3.84	7.14	10.70	18.65
	16	1.66	3.11	6.39	9.05	14.79	3.46	6.78	10.32	18.27
	24	0.98	2.39	5.67	8.39	14.16	2.72	6.07	9.55	17.51
10	12	1.75	3.20	6.47	9.12	14.85	3.55	6.83	10.35	18.24
	16	1.33	2.75	6.02	8.70	14.45	3.09	6.38	9.87	17.77
	24	0.51	1.88	5.14	7.89	13.66	2.18	5.51	8.93	16.83
12	12	1.17	2.57	5.81	8.49	14.22	2.87	6.08	9.50	17.23
	16	0.59	1.94	5.16	7.89	13.63	2.23	5.45	8.82	16.53
	24	0.00[7]	0.74	3.92	6.72	12.46	0.98	4.23	7.48	15.17
14	12	0.52	1.83	4.94	7.66	13.41	2.10	5.18	8.42	15.84
	16	0.00[7]	1.03	4.10	6.85	12.58	1.27	4.36	7.51	14.89
	24	0.00[6]	0.00[6]	2.52[7]	5.31	10.99	0.00[7]	2.81	5.79	13.08
16	12	0.00[6]	1.03	3.91	6.52	12.09	1.27	4.19	7.15	14.08
	16	0.00[6]	0.09[6]	2.91[7]	5.53	11.04	0.29[7]	3.20	6.05	12.90
	24	0.00[3]	0.00[6]	1.09[6]	3.71[6]	0.91	0.00[6]	1.38[6]	4.01[7]	10.70

NOTES:

1 Deflection exceeds L/120
2 Deflection exceeds L/240
3 Deflection exceeds L/360
6 Deflection exceeds L/600
7 Deflection exceeds L/720
Axial Load Multiplier = 1
Lateral Load Multiplier - Strength = 1
Lateral Load Multiplier - Deflection = 1.0

Allowable Combined Axial and Bending Loads 40psf lateral load

Wall	Spacing	1000S162-mils (Fy)				1000S200-mils (Fy)				1000S250-mils (Fy)			
Ht. (ft)	(in) o.c.	-43 (33)	-54 (50)	-68 (50)	-97 (50)	-43 (33)	-54 (50)	-68 (50)	-97 (50)	-43 (33)	-54 (50)	-68 (50)	-97 (50)
8	12	2.77	4.75	6.52	10.45	3.84	7.03	9.55	15.24	4.33	7.67	11.30	19.32
	16	2.57	4.58	6.36	10.29	3.62	6.81	9.34	15.04	4.09	7.45	11.06	19.09
	24	2.19	4.24	6.03	9.98	3.17	6.37	8.92	14.64	3.62	7.00	10.59	18.65
9	12	2.61	4.61	6.39	10.32	3.66	6.84	9.37	15.07	4.13	7.49	11.10	19.13
	16	2.36	4.39	6.18	10.12	3.37	6.57	9.11	14.81	3.83	7.20	10.80	18.84
	24	1.88	3.96	5.76	9.72	2.80	6.02	8.57	14.30	3.23	6.63	10.21	18.27
10	12	2.43	4.45	6.23	10.17	3.45	6.64	9.17	14.88	3.91	7.28	10.88	18.91
	16	2.13	4.18	5.97	9.92	3.10	6.29	8.84	14.55	3.54	6.92	10.50	18.55
	24	1.53	3.65	5.46	9.43	2.40	5.61	8.18	13.91	2.80	6.22	9.76	17.84
12	12	2.02	4.08	5.87	9.82	2.96	6.15	8.70	14.41	3.40	6.77	10.34	18.38
	16	1.59	3.69	5.49	9.45	2.46	5.65	8.21	13.93	2.87	6.26	9.80	17.85
	24	0.75	2.92	4.75	8.74	1.47	4.67	7.26	12.99	1.82	5.25	8.72	16.80
14	12	1.54	3.63	5.43	9.38	2.39	5.56	8.12	13.82	2.78	6.14	9.66	17.71
	16	0.96	3.10	4.92	8.88	1.72	4.89	7.45	13.16	2.07	5.44	8.92	16.97
	24	0.00	2.08	3.91	7.90	0.42	3.58	6.16	11.86	0.70	4.10	7.47	15.52
16	12	1.00	3.11	4.91	8.86	1.74	4.87	7.42	13.10	2.08	5.35	8.77	16.70
	16	0.28	2.44	4.25	8.20	0.90	4.01	6.56	12.23	1.19	4.47	7.81	15.73
	24	0.00	1.15	2.97	6.92	0.00	2.37	4.91	10.54	0.00	2.80	5.98	13.86

Wall	Spacing	1200S162-mils (Fy)			1200S200-mils (Fy)			1200S250-mils (Fy)		
Ht. (ft)	(in) o.c.	-54 (50)	-68 (50)	-97 (50)	-54 (50)	-68 (50)	-97 (50)	-54 (50)	-68 (50)	-97 (50)
8	12	4.59	6.28	10.05	6.27	9.22	15.04	7.25	10.64	18.99
	16	4.45	6.15	9.93	6.12	9.06	14.88	7.08	10.46	18.80
	24	4.17	5.89	9.69	5.80	8.73	14.56	6.74	10.10	18.42
9	12	4.48	6.17	9.95	6.15	9.09	14.91	7.11	10.49	18.83
	16	4.30	6.01	9.80	5.95	8.88	14.70	6.90	10.26	18.59
	24	3.95	5.67	9.49	5.55	8.45	14.29	6.47	9.80	18.10
10	12	4.35	6.05	9.84	6.01	8.93	14.76	6.96	10.32	18.65
	16	4.13	5.85	9.65	5.76	8.67	14.50	6.70	10.04	18.35
	24	3.70	5.43	9.26	5.27	8.15	13.99	6.16	9.47	17.74
12	12	4.05	5.77	9.57	5.68	8.57	14.40	6.61	9.93	18.22
	16	3.74	5.47	9.29	5.33	8.19	14.02	6.23	9.51	17.78
	24	3.11	4.87	8.73	4.62	7.43	13.28	5.46	8.70	16.90
14	12	3.69	5.43	9.25	5.30	8.13	13.96	6.20	9.45	17.69
	16	3.27	5.02	8.86	4.81	7.60	13.44	5.68	8.88	17.08
	24	2.42	4.21	8.10	3.85	6.57	12.42	4.63	7.77	15.86
16	12	3.28	5.03	8.87	4.85	7.61	13.43	5.72	8.88	17.06
	16	2.72	4.49	8.36	4.22	6.92	12.75	5.04	8.14	16.24
	24	1.64	3.45	7.36	2.96	5.58	11.41	3.68	6.69	14.64

NOTES:

1 Deflection exceeds L/120
2 Deflection exceeds L/240
3 Deflection exceeds L/360
6 Deflection exceeds L/600
7 Deflection exceeds L/720
Axial Load Multiplier = 1
Lateral Load Multiplier - Strength = 1
Lateral Load Multiplier - Deflection = 1.0

Floor Joist Bridging and Bracing Notes:

1. Bracing members shall be designed in accordance with section D3 of AISI S100.
2. Minimum number of rows required is shown in table, additional rows of bridging may be required by design.
3. All connections MUST be designed by a licensed professional engineer.

Span (ft)	Minimum Number of Rows
Up to 16′	1 row at the mid-span
16′ to 24′	2 rows at 1/3 points
24′ to 32′	3 rows at 1/4 points
Over 32′	Consult your Engineer of Record

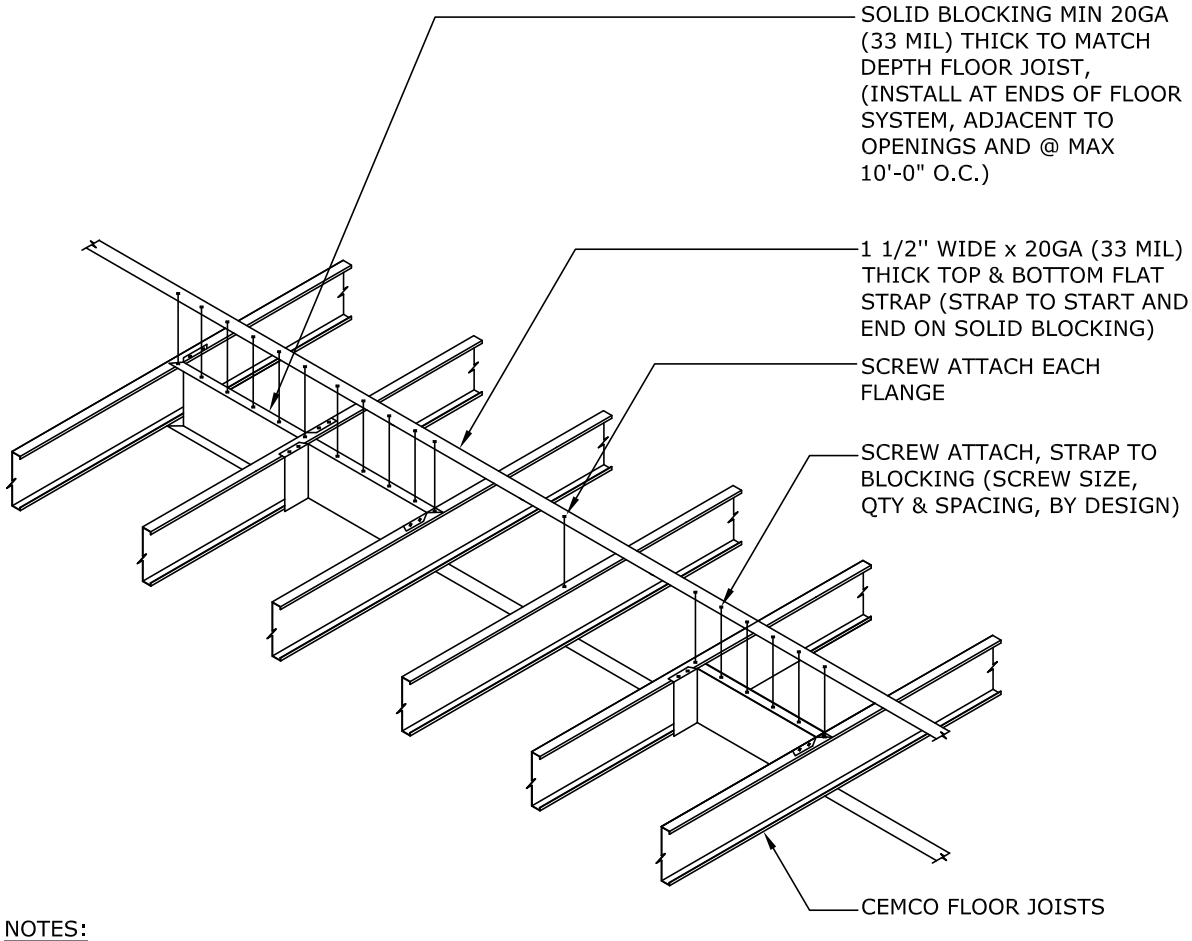

NOTES:
1.TOP STRAP NOT REQUIRED IF TOP SIDE IS FULLY/ CONTINUOUSLY SHEATHED.
2.PLACE SOLID BLOCKING ADJACENT TO ALL OPENINGS AND TWO BAYS AT ENDS OF JOIST SYSTEM

CEMCO™
Steel Framing and Metal Lath

Floor Joist Span Table Notes

1. Spans are based on continuous support of compression flange over the full length of the joist.
2. Spans are based on tension flange laterally braced at maximum spacing of 8'-0".
3. Joists must be braced against rotation at all supports.
4. End shear and web crippling capacity have not been reduced for punchouts.
5. End web crippling check is based on 3-1/2" end bearing.
6. "e" indicates web stiffeners are required at end supports.
7. Web stiffeners are required at interior support. Combined bending and web crippling check is not required when web stiffener is provided.
8. Shear capacity at interior support has been reduced for the presence of punchouts adjacent to the supports. Combined bending and shear check is based on unreinforced web in accordance with section C3.3.1 of AISI S100.
9. Total load deflection limited to L/240. Live load deflection limit as noted.
10. Alternate span live loading has been considered for two equal span conditions.
11. Stud distortional buckling based on assumed KΦ=0.

Allowable Floor Joist Spans 10 psf Dead Load and 20 psf Live Load

Section	Fy (Ksi)	L/360 Live Load Deflection						L/480 Live Load Deflection					
		Single Span Spacing (in)			Two Equal Spans Spacing (in)			Single Span Spacing (in)			Two Equal Spans Spacing (in)		
		12	16	24	12	16	24	12	16	24	12	16	24
600S162-33	33	14′ 6″	12′ 6″ e	10′ 3″ e	14′ 6″ i	12′ 6″ i	10′ 3″ i	14′ 3″	12′ 6″e	10′ 3″e	14′ 6″i	12′ 6″i	10′ 3″i
600S200-33	33	15′ 5″	13′ 4″ e	10′ 11″ e	15′ 5″ i	13′ 4″ i	10′ 11″ a	15′ 0″	13′ 4″ e	10′ 11″ e	15′ 5″ i	13′ 4″ i	10′ 11″ a
600S162-43	33	17′ 2″	15′ 6″	12′ 8″	17′ 11″ i	15′ 6″ i	12′ 8″ i	15′ 7″	14′ 2″	12′ 4″	17′ 6″ i	15′ 6″ i	12′ 8″ i
600S200-43	33	18′ 0″	16′ 0″	13′ 0″	18′ 5″ i	16′ 0″ i	13′ 0″ i	16′ 4″	14′ 10″	13′ 0″	18′ 4″ i	16′ 0″ i	13′ 0″ i
600S250-43	33	18′ 10″	16′ 5″	13′ 5″ e	18′ 11″ i	16′ 5″ i	13′ 5″ i	17′ 1″	15′ 7″	13′ 5″ e	18′ 11″ i	16′ 5″ i	13′ 5″ i
600S162-54	50	18′ 5″	16′ 8″	14′ 7″	20′ 8″	18′ 9″	16′ 4″ i	16′ 8″	15′ 2″	13′ 3″	18′ 9″	17′ 0″	14′ 10″
600S200-54	50	19′ 4″	17′ 7″	15′ 4″	21′ 8″	19′ 8″	17′ 3″ i	17′ 7″	15′ 11″	13′ 11″	19′ 8″	17′ 11″	15′ 8″ i
600S250-54	50	20′ 3″	18′ 4″	16′ 0″	22′ 8″	20′ 8″ i	17′ 10″ i	18′ 4″	16′ 8″	14′ 7″	20′ 8″	18′ 9″	16′ 4″ i
600S300-54	50	20′ 8″	18′ 10″	16′ 5″	23′ 3″	21′ 1″ i	18′ 1″ i	18′ 10″	17′ 1″	14′ 11″	21′ 1″	19′ 2″	16′ 9″ i
600S162-68	50	19′ 8″	17′ 11″	15′ 8″	22′ 2″	20′ 1″	17′ 7″	17′ 11″	16′ 3″	14′ 2″	20′ 1″	18′ 3″	15′ 11″
600S200-68	50	20′ 9″	18′ 10″	16′ 5″	23′ 3″	21′ 2″	18′ 6″	18′ 10″	17′ 1″	14′ 11″	21′ 2″	19′ 3″	16′ 9″
600S250-68	50	21′ 9″	19′ 9″	17′ 3″	24′ 5″	22′ 2″	19′ 4″	19′ 9″	17′ 11″	15′ 8″	22′ 2″	20′ 2″	17′ 7″
600S300-68	50	22′ 6″	20′ 5″	17′ 10″	25′ 3″	22′ 11″	20′ 0″ i	20′ 5″	18′ 7′′	16′ 3″	22′ 11″	20′ 10″	18′ 2″
600S162-97	50	21′ 10″	19′ 10″	17′ 4″	24′ 6″	22′ 3″	19′ 6″	19′ 10″	18′ 0″	15′ 9″	22′ 3″	20′ 3″	17′ 8″
600S200-97	50	23′ 0″	20′ 11″	18′ 3″	25′ 10″	23′ 6″	20′ 6″	20′ 11″	19′ 0″	16′ 7″	23′ 6″	21′ 4″	18′ 8″
600S250-97	50	24′ 2″	21′ 11″	19′ 2″	27′ 2″	24′ 8″	21′ 6″	21′ 11″	19′ 11″	17′ 5″	24′ 8″	22′ 5″	19′ 7″
600S300-97	50	25′ 2″	22′ 10″	19′ 11″	28′ 3″	25′ 8″	22′ 5″	22′ 10″	20′ 9′′	18′ 1″	25′ 8″	23′ 4″	20′ 4″
800S162-33	33	16′ 8″ e	14′ 5″ e	11′ 10″ e	16′ 8″ a	14′ 5″ a	10′ 9″ a	16′ 8″ e	14′ 5″ e	11′ 10″ e	16′ 8″ a	14′ 5″ a	10′ 9″ a
800S200-33	33	17′ 11″ e	15′ 6″ e	12′ 8″ e	17′ 11″ a	15′ 0″ a	11′ 1″ a	17′ 11″ e	15′ 6″ e	12′ 8″ e	17′ 11″ a	15′ 0″ a	11′ 1″ a
800S162-43	33	20′ 2″	17′ 5″	14′ 3″ e	20′ 2″ i	17′ 5″ i	14′ 3″ i	19′ 6″	17′ 5″	14′ 3″ e	20′ 2″ i	17′ 5″ i	14′ 3″ i
800S200-43	33	21′ 7″	18′ 8″	15′ 3″ e	21′ 7″ i	18′ 8″ i	15′ 3″ i	20′ 6″	18′ 8″	15′ 3″ e	21′ 7″ i	18′ 8″ i	15′ 3″ i
800S250-43	33	22′ 1″	19′ 2″ e	15′ 7″ e	22′ 1″ i	19′ 2″ i	15′ 7″ i	21′ 5″	19′ 2″ e	15′ 7″ e	22′ 1″ i	19′ 2″ i	15′ 7″ i
800S162-54	50	23′ 1″	20′ 11″	18′ 3″	25′ 11″ i	23′ 4″ i	19′ 1″ i	20′ 11″	19′ 0″	16′ 7″	23′ 6″	21′ 4″ i	18′ 8″ i
800S200-54	50	24′ 3″	22′ 1″	19′ 3″	27′ 3″	24′ 9″ i	20′ 4″ i	22′ 1″	20′ 0″	17′ 6″	24′ 9″	22′ 6″	19′ 8″ i
800S250-54	50	25′ 4″	23′ 0″	20′ 1″	28′ 5″ i	25′ 6″ i	20′ 10″ i	23′ 0″	20′ 11″	18′ 3″	25′ 10″	23′ 6″ i	20′ 6″ i
800S300-54	50	25′ 11″	23′ 7″	20′ 7″	29′ 1″ i	25′ 10″ i	21′ 1″ i	23′ 7″	21′ 5″	18′ 8″	26′ 5″	24′ 0″ i	21′ 0″ i
800S162-68	50	24′ 11″	22′ 7″	19′ 9″	27′ 11″	25′ 5″	22′ 2″ i	22′ 7″	20′ 6″	17′ 11″	25′ 5″	23′ 1″	20′ 2″
800S200-68	50	26′ 1″	23′ 8″	20′ 8″	29′ 3″	26′ 7″	23′ 3″ i	23′ 8″	21′ 6″	18′ 9″	26′ 7″	24′ 2″	21′ 1″
800S250-68	50	27′ 3″	24′ 9″	21′ 7″	30′ 7″	27′ 9″	24′ 3″ i	24′ 9″	22′ 5″	19′ 7″	27′ 9″	25′ 3″	22′ 0″
800S300-68	50	28′ 1″	25′ 6″	22′ 3″	31′ 7″	28′ 8″	24′ 9″ i	25′ 6″	23′ 2″	20′ 3″	28′ 8″	26′ 0″	22′ 6″ i
800S162-97	50	27′ 8″	25′ 1″	21′ 11″	31′ 1″	28′ 2″	24′ 8″	25′ 1″	22′ 10″	19′ 11″	28′ 2″	25′ 7″	22′ 5″
800S200-97	50	29′ 0″	26′ 4″	23′ 0″	32′ 7″	29′ 7″	25′ 10″	26′ 4″	23′ 11″	20′ 11″	29′ 7″	26′ 10″	23′ 6″
800S250-97	50	30′ 4″	27′ 6″	24′ 1″	34′ 0″	30′ 11″	27′ 0″	27′ 6″	25′ 0″	21′ 10″	30′ 11″	28′ 1″	24′ 6″
800S300-97	50	31′ 5″	28′ 7″	24′ 11″	35′ 4″	32′ 1″	28′ 0″	29′ 7″	25′ 11″	22′ 8″	32′ 1″	29′ 2″	25′ 5″
1000S162-43	33	22′ 4″ e	19′ 4″ e	15′ 9″ e	22′ 4″ a	19′ 4″ a	15′ 9″ a	22′ 4″ e	19′ 4″ e	15′ 9″ e	22′ 4″ a	19′ 4″ a	15′ 9″ a
1000S200-43	33	24′ 1″ e	20′ 10″ e	17′ 0″ e	24′ 1″ a	20′ 10″ a	17′ 0″ a	24′ 1″ e	20′ 10″ e	17′ 0″ e	24′ 1″ a	20′ 10″ a	17′ 0″ a
1000S250-43	33	24′ 9″ e	21′ 5″ e	17′ 6″ e	24′ 9″ a	21′ 5″ a	17′ 5″ a	24′ 9″ e	21′ 5″ e	17′ 6″ e	24′ 9″ a	21′ 5″ a	17′ 5″ a
1000S162-54	50	27′ 5″	24′ 11″	21′ 2″	29′ 11″ i	25′ 11″ i	21′ 2″ i	24′ 11″	22′ 8″	19′ 9″	28′ 0″ i	25′ 5″ i	21′ 2″ i
1000S200-54	50	28′ 8″	26′ 1″	22′ 9″	32′ 2″ i	27′ 10″ i	22′ 9″ i	26′ 1″	23′ 8″	20′ 8″	29′ 3″ i	26′ 7″ i	22′ 9″ i
1000S250-54	50	30′ 3″	27′ 5″	23′ 4″	33′ 0″ i	28′ 7″ i	23′ 4″ i	27′ 5″	24′ 11″	21′ 9″	30′ 10″ i	28′ 0″ i	23′ 4″ i
1000S300-54	50	31′ 1″	28′ 3″	23′ 8″	33′ 6″ i	29′ 0″ i	23′ 8″ i	28′ 3″	25′ 8″	22′ 5″	31′ 8″ i	28′ 9″ i	23′ 8″ i
1000S162-68	50	29′ 9″	27′ 0″	23′ 7″	33′ 5″	30′ 4″ i	25′ 0″ i	27′ 0″	24′ 7″	21′ 5″	30′ 4″	27′ 7″	24′ 1″ i
1000S200-68	50	31′ 1″	28′ 3″	24′ 8″	34′ 10″	31′ 8″ i	26′ 9″ i	28′ 3″	25′ 8″	22′ 5″	31′ 8″	28′ 9″	25′ 2″ i
1000S250-68	50	32′ 6″	29′ 6″	25′ 9″	36′ 6″	33′ 2″ i	27′ 6″ i	29′ 6″	26′ 10″	23′ 5″	33′ 2″	30′ 1″	26′ 4″ i
1000S300-68	50	33′ 6″	30′ 5″	26′ 7″	37′ 7″	34′ 2″ i	27′ 11″ i	30′ 5″	27′ 8″	24′ 2″	34′ 2″	31′ 0″	27′ 11″ i
1000S162-97	50	33′ 4″	30′ 3″	26′ 5″	37′ 5″	34′ 0″	29′ 8″	30′ 3″	27′ 6″	24′ 0″	34′ 0″	30′ 10″	26′ 11″
1000S200-97	50	34′ 9″	31′ 7″	27′ 7″	39′ 1″	35′ 6″	31′ 0″	31′ 7″	28′ 9″	25′ 1″	35′ 6″	32′ 3″	28′ 2″
1000S250-97	50	36′ 3″	32′ 11″	28′ 9″	40′ 8″	36′ 11″	32′ 3″	32′ 11″	29′ 11″	26′ 1″	36′ 11″	33′ 7″	29′ 4″
1000S300-97	50	37′ 7″	34′ 1″	29′ 10″	42′ 2″	38′ 4″	33′ 6″	34′ 1″	31′ 0″	27′ 1″	38′ 4″	34′ 10″	30′ 5″
1200S162-54	50	31′ 8″ e	27′ 10″ e	22′ 9″ e	32′ 2″ a	27′ 10″ a	22′ 9″ a	28′ 9″ e	26′ 2″ e	22′ 9″ e	32′ 2″ a	27′ 10″ a	22′ 9″ a
1200S200-54	50	33′ 0″ e	30′ 0″ e	24′ 7″ e	34′ 10″ a	30′ 2″ a	24′ 7″ a	30′ 0″ e	27′ 3″ e	23′ 9″ e	33′ 8″ a	30′ 2″ a	24′ 7′′ a
1200S250-54	50	34′ 4″ e	31′ 2″ e	25′ 5″ e	36′ 0″ a	31′ 2″ a	25′ 5″ a	31′ 2″ e	28′ 4″ e	24′ 9″ e	35′ 0″ a	31′ 2″ a	25′ 5″ a
1200S300-54	50	36′ 0″ e	31′ 9″ e	25′ 11″ e	36′ 8″ a	31′ 9″ a	25′ 11″ a	32′ 9″ e	29′ 9″ e	25′ 11″ e	36′ 8″ a	31′ 9″ a	25′ 11″ a
1200S162-68	50	34′ 5″	31′ 3″	27′ 1″	38′ 4″ i	33′ 2″ i	27′ 1″ i	31′ 3″	28′ 5″	24′ 9″	35′ 1″	31′ 10″ i	27′ 1″ i
1200S200-68	50	35′ 10″	32′ 6″	28′ 5″	40′ 3″ i	35′ 8″ i	29′ 1″ i	32′ 6″	29′ 7″	25′ 10″	36′ 6″	33′ 2″ i	29′ 0″ i
1200S250-68	50	37′ 3″	33′ 10″	29′ 7″	41′ 10″ i	36′ 10″ i	30′ 1″ i	33′ 10″	30′ 9″	26′ 10″	38′ 0″	34′ 6″ i	30′ 1″ i
1200S300-68	50	38′ 9″	35′ 3″	30′ 8″	43′ 4″ i	37′ 7″ i	30′ 8″ i	35′ 3″	32′ 0″	27′ 11″	39′ 7″	35′ 11″ i	30′ 8″ i
1200S162-97	50	38′ 10″	35′ 3″	30′ 10″	43′ 7″	39′ 7″	34′ 7″ i	35′ 3″	32′ 1″	28′ 0″	39′ 7″	36′ 0″	31′ 5″
1200S200-97	50	40′ 5″	36′ 9″	32′ 1″	45′ 5″	41′ 3″	36′ 0″ i	36′ 9″	33′ 4″	29′ 2″	41′ 3″	37′ 6″	32′ 9″
1200S250-97	50	42′ 0″	38′ 2″	33′ 4″	47′ 2″	42′ 10″	37′ 5″ i	38′ 2″	34′ 8″	30′ 3″	42′ 10″	38′ 11″	34′ 0″
1200S300-97	50	43′ 5″	39′ 6″	34′ 6″	48′ 9″	44′ 4″	38′ 8″ i	39′ 6″	35′ 10″	31′ 4″	44′ 4″	40′ 3″	35′ 2″

"e" Requires web stiffeners at end supports Interior Bearing Length = 3.5"
"i" Requires web stiffeners at interior supports End Bearing Length = 3.5"
"a" Requires web stiffeners at all supports Alternate Span Loading Considered
Studs considered unpunched for web crippling and shear

Allowable Floor Joist Spans 10 psf Dead Load and 30 psf Live Load

Section	Fy (Ksi)	L/360 Live Load Deflection						L/480 Live Load Deflection					
		Single Span Spacing (in)			Two Equal Spans Spacing (in)			Single Span Spacing (in)			Two Equal Spans Spacing (in)		
		12	16	24	12	16	24	12	16	24	12	16	24
600S162-33	33	14′ 6″	10′ 10″ e	8′ 10″ e	12′ 6″ i	10′ 10″ i	8′ 10″ a	12′ 6″ e	10′ 10″ e	8′ 10″ e	12′ 6″ i	10′ 10″ i	8′ 10″ a
600S200-33	33	15′ 5″	11′ 7″ e	9′ 5″ e	13′ 4″ i	11′ 7″ i	9′ 5″ i	13′ 1″ e	11′ 7″ e	9′ 5″ e	13′ 4″ i	11′ 7″ i	9′ 5″ a
600S162-43	33	17′ 2″	13′ 5″	10′ 11″ e	15′ 6″ i	13′ 5″ i	10′ 11″ i	13′ 7″	12′ 4″	10′ 9″ e	15′ 3″ i	13′ 5″ i	10′ 11″ i
600S200-43	33	18′ 0″	13′ 10″	11′ 3″ e	16′ 0″ i	13′ 10″ i	11′ 3″ i	14′ 3″	13′ 0″	11′ 3″ e	16′ 0″ i	13′ 10″ i	11′ 3″ i
600S250-43	33	18′ 10″	14′ 2″	11′ 7″ e	16′ 5″ i	14′ 2″ i	11′ 7″ i	14′ 11″	13′ 7″	11′ 7″ e	16′ 5″ i	14′ 2″ i	11′ 7″ i
600S162-54	50	18′ 5″	14′ 7″	12′ 9″	18′ 0″	16′ 4″	14′ 4″ i	14′ 7″	13′ 3″	11′ 7″	16′ 4″	14′ 10″	13′ 0″ i
600S200-54	50	19′ 4″	15′ 4″	13′ 5″	18′ 11″	17′ 3″ i	15′ 0″ i	15′ 4″	13′ 11″	12′ 2″	17′ 3″	15′ 8″	13′ 8″ i
600S250-54	50	20′ 3″	16′ 0″	14′ 0″	19′ 10″	18′ 0″ i	15′ 5″ i	16′ 0″	14′ 7″	12′ 9″	18′ 0″	16′ 4″	14′ 3″ i
600S300-54	50	20′ 8″	16′ 5″	14′ 4″	20′ 4″	18′ 5″ i	15′ 8″ i	16′ 5″	14′ 11″	13′ 0″	18′ 5″	16′ 9″	14′ 8″ i
600S162-68	50	19′ 8″	15′ 8″	13′ 8″	19′ 4″	17′ 7″	15′ 4″	15′ 8″	14′ 2″	12′ 5″	17′ 7″	15′ 11″	13′ 11″
600S200-68	50	20′ 9″	16′ 5″	14′ 4″	20′ 4″	18′ 6″	16′ 2″	16′ 5″	14′ 11″	13′ 1″	18′ 6″	16′ 9″	14′ 8″
600S250-68	50	21′ 9″	17′ 3″	15′ 1″	21′ 4″	19′ 4″	16′ 11″ i	17′ 3″	15′ 8″	13′ 8″	19′ 4″	17′ 7″	15′ 4″
600S300-68	50	22′ 6″	17′ 10″	15′ 7″	22′ 1″	20′ 0″	17′ 6″ i	17′ 10″	16′ 3″	14′ 2″	20′ 0″	18′ 2″	15′ 11″
600S162-97	50	21′ 10″	17′ 4″	15′ 2″	21′ 5″	19′ 6″	17′ 0″	17′ 4″	15′ 9″	13′ 9″	19′ 6″	17′ 8″	15′ 5″
600S200-97	50	23′ 0″	18′ 3″	15′ 11″	22′ 7″	20′ 6″	17′ 11″	18′ 3″	16′ 7″	14′ 6″	20′ 6″	18′ 8″	16′ 3″
600S250-97	50	24′ 2″	19′ 2″	16′ 9″	23′ 8″	21′ 6″	18′ 10″	19′ 2″	17′ 5″	15′ 3″	21′ 6″	19′ 7″	17′ 1″
600S300-97	50	25′ 2″	19′ 11″	17′ 5″	24′ 8″	22′ 5″	19′ 7″	19′ 11″	18′ 1″	15′ 10″	22′ 5″	20′ 4″	17′ 9″
800S162-33	33	16′ 8″ e	12′ 6″ e	10′ 3″ e	14′ 5″ a	11′ 9″ a	8′ 8″ a	14′ 5″ e	12′ 6″ e	10′ 3″ e	14′ 5″ a	11′ 9″ a	8′ 8″ a
800S200-33	33	17′ 11″ e	13′ 5″ e	11′ 0″ e	15′ 0″ a	12′ 2″ a	8′ 11″ a	15′ 6″ e	13′ 5″ e	11′ 0″ e	15′ 0″ a	12′ 2″ a	8′ 11″ a
800S162-43	33	20′ 2″	15′ 1″ e	12′ 4″ e	17′ 5″ i	15′ 1″ i	12′ 4″ i	17′ 0″	15′ 1″ e	12′ 4″ e	17′ 5″ i	15′ 1″ i	12′ 4″ i
800S200-43	33	21′ 7″	16′ 2″ e	13′ 2″ e	18′ 8″ i	16′ 2″ i	13′ 2″ a	17′ 11″	16′ 2″ e	13′ 2″ e	18′ 8″ i	16′ 2″ i	13′ 2″ i
800S250-43	33	22′ 1″	16′ 7″ e	13′ 6″ e	19′ 2″ i	16′ 7″ i	13′ 6″ a	18′ 8″	16′ 7″ e	13′ 6″ e	19′ 2″i	16′ 7″ i	13′ 6″ a
800S162-54	50	23′ 1″	18′ 3″	16′ 0″	22′ 7″ i	20′ 3″ i	16′ 6″ i	18′ 3″	16′ 7″	14′ 6″	20′ 6″	18′ 8″ i	16′ 4″ i
800S200-54	50	24′ 3″	19′ 3″	16′ 10″	23′ 10″ i	21′ 7″ i	17′ 7″ i	19′ 3″	17′ 6″	15′ 3″	21′ 7″	19′ 8″ i	17′ 2″ i
800S250-54	50	25′ 4″	20′ 1″	17′ 7″	24′ 10″ i	22′ 1″ i	18′ 0″ i	20′ 1″	18′ 3″	15′ 11″	22′ 7″	20′ 6″ i	17′ 11″ i
800S300-54	50	25′ 11″	20′ 7″	18′ 0″	25′ 5″ i	22′ 5″ i	18′ 3″ i	20′ 7″	18′ 8″	16′ 4″	23′ 1″ i	21′ 0″ i	18′ 3″ i
800S162-68	50	24′ 11″	19′ 9″	17′ 3″	24′ 5″	22′ 2″	19′ 4″ i	19′ 9″	17′ 11″	15′ 8″	22′ 2″	20′ 2″	17′ 7″ i
800S200-68	50	26′ 1″	20′ 9″	18′ 1″	25′ 7″	23′ 3″	20′ 3″ i	20′ 8″	18′ 9″	16′ 5″	23′ 3″	21′ 1″	18′ 5″
800S250-68	50	27′ 3″	21′ 7″	18′ 10″	26′ 8″	24′ 3″ i	21′ 1″ i	21′ 7″	19′ 7″	17′ 2″	24′ 3″	22′ 0″	19′ 3″ i
800S300-68	50	28′ 1″	22′ 3″	19′ 6″	27′ 7″	25′ 0″ i	21′ 5″ i	22′ 3″	20′ 3″	17′ 8″	25′ 0″	22′ 9″	19′ 10″ i
800S162-97	50	27′ 8″	21′ 11″	19′ 2″	27′ 1″	24′ 8″	21′ 6″	21′ 11″	19′ 11″	17′ 5″	24′ 8″	22′ 5″	19′ 7″
800S200-97	50	29′ 0″	23′ 0″	20′ 1″	28′ 5″	25′ 10″	22′ 7″	23′ 0″	20′ 11″	18′ 3″	25′ 10″	23′ 6″	20′ 6″
800S250-97	50	30′ 4″	24′ 1″	21′ 0″	29′ 9″	27′ 0″	23′ 7″	24′ 1″	21′ 10″	19′ 1″	27′ 0″	24′ 6″	21′ 5″
800S300-97	50	31′ 5″	24′ 11″	21′ 10″	30′ 10″	28′ 0″	24′ 6″	24′ 11″	22′ 8″	19′ 10″	28′ 0″	25′ 5″	22′ 3″
1000S162-43	33	22′ 4″ e	16′ 9″ e	13′ 8″ e	19′ 4″ a	16′ 9″ a	13′ 4″ a	19′ 4″ e	16′ 9″ e	13′ 8″ e	19′ 4″ a	16′ 9″ a	13′ 4″ a
1000S200-43	33	24′ 1″ e	18′ 0″ e	14′ 9″ e	20′ 10″ a	18′ 0″ a	13′ 9″ a	20′ 10″ e	18′ 0″ e	14′ 9″ e	20′ 10″ a	18′ 0″ a	13′ 9″ a
1000S250-43	33	24′ 9″ e	18′ 7″ e	15′ 2″ e	21′ 5″ a	18′ 7″ a	14′ 2″ a	21′ 5″ e	18′ 7″ e	15′ 2″ e	21′ 5″ a	18′ 7″ a	14′ 2″ a
1000S162-54	50	27′ 5″	21′ 9″	18′ 4″	25′ 11″ i	22′ 5″ i	18′ 4″ i	21′ 9″	19′ 9″	17′ 3″	24′ 5″ i	22′ 3″ i	18′ 4″ i
1000S200-54	50	28′ 8″	22′ 9″	19′ 8″	27′ 10″ i	24′ 1″ i	19′ 8″ i	22′ 9″	20′ 8″	18′ 1″	25′ 7″ i	23′ 2″ i	19′ 8″ i
1000S250-54	50	30′ 3″	24′ 0″	20′ 2″	28′ 7″ i	24′ 9″ i	20′ 2″ i	24′ 0″	21′ 9″	19′ 0″	26′ 11″ i	24′ 5″ i	20′ 2″ i
1000S300-54	50	31′ 1″	24′ 8″	20′ 6″	29′ 0″ i	25′ 2″ i	20′ 6″ i	24′ 8″	22′ 5″	19′ 7″	27′ 8″ i	25′ 2″ i	20′ 6″ i
1000S162-68	50	29′ 9″	23′ 7″	20′ 7″	29′ 2″	26′ 6″ i	21′ 8″ i	23′ 7″	21′ 5″	18′ 9″	26′ 6″	24′ 1″	21′ 0″ i
1000S200-68	50	31′ 1″	24′ 8″	21′ 6″	30′ 5″	27′ 8″ i	23′ 2″ i	24′ 8″	22′ 5″	19′ 7″	27′ 8″	25′ 2″	21′ 11″ i
1000S250-68	50	32′ 6″	25′ 9″	22′ 6″	31′ 10″	28′ 11″ i	23′ 9″ i	25′ 9″	23′ 5″	20′ 5″	28′ 11″	26′ 4″ i	23′ 0″ i
1000S300-68	50	33′ 6″	26′ 7″	23′ 3″	32′ 10″ i	29′ 7″ i	24′ 2″ i	26′ 7″	24′ 2″	21′ 1″	29′ 10″	27′ 1″ i	23′ 8″ i
1000S162-97	50	33′ 4″	26′ 5″	23′ 1″	32′ 8″	29′ 8″	25′ 11″	26′ 5″	24′ 0″	21′ 0″	29′ 8″	26′ 11″	23′ 7″
1000S200-97	50	34′ 9″	27′ 7″	24′ 1″	34′ 1″	31′ 0″	27′ 1″	27′ 7″	25′ 1″	21′ 11″	31′ 0″	28′ 2″	24′ 7″
1000S250-97	50	36′ 3″	28′ 9″	25′ 1″	35′ 6″	32′ 3″	28′ 2″	28′ 9″	26′ 1″	22′ 10″	32′ 3″	29′ 4″	25′ 7″
1000S300-97	50	37′ 7″	29′ 10″	26′ 0″	36′ 10″	33′ 6″	29′ 3″	29′ 10″	27′ 1″	23′ 8″	33′ 6″	30′ 5″	26′ 7″
1200S162-54	50	31′ 8″ e	24′ 2″ e	19′ 8″ e	27′ 10″ a	24′ 2″ a	19′ 8″ a	25′ 1″ e	22′ 10″ e	19′ 8″ e	27′ 10″ a	24′ 2″ a	19′ 8″ a
1200S200-54	50	33′ 0″ e	26′ 1″ e	21′ 4″ e	30′ 2″ a	26′ 1″ a	21′ 3″ a	26′ 2″ e	23′ 9″ e	20′ 9″ e	29′ 5″ a	26′ 1″ a	21′ 3″ a
1200S250-54	50	34′ 4″ e	27′ 0″ e	22′ 0″ e	31′ 2″ a	27′ 0″ a	21′ 6″ a	27′ 3″ e	24′ 9″ e	21′ 7″ e	30′ 7″ a	27′ 0″ a	21′ 6″ a
1200S300-54	50	36′ 0″ e	27′ 6″ e	22′ 5″ e	31′ 9″ a	27′ 6″ a	21′ 10″ a	28′ 7″ e	25′ 11″ e	22′ 5″ e	31′ 9″ a	27′ 6″ a	21′ 10″ a
1200S162-68	50	34′ 5″	27′ 3″	23′ 5″	33′ 2″ i	28′ 9″ i	23′ 5″ i	27′ 3″	24′ 9″	21′ 8″ e	30′ 8″	27′ 10″ i	23′ 5″ i
1200S200-68	50	35′ 10″	28′ 5″	24′ 10″	35′ 2″ i	30′ 11″ i	25′ 3″ i	28′ 5″	25′ 10″	22′ 7″ e	31′ 11″	29′ 0″ i	25′ 3″ i
1200S250-68	50	37′ 3″	29′ 7″	25′ 10″	36′ 6″ i	31′ 11″ i	26′ 0″ i	29′ 7″	26′ 10″	23′ 5″ e	33′ 2″ i	30′ 2″ i	26′ 0″ i
1200S300-68	50	38′ 9″	30′ 9″	26′ 6″	37′ 7″ i	32′ 6″ i	26′ 6″ i	30′ 9″	27′ 11″	24′ 5″ e	34′ 7″ i	31′ 5″ i	26′ 6″ i
1200S162-97	50	38′ 10″	30′ 10″	26′ 11″	38′ 1″	34′ 7″	30′ 3″ i	30′ 10″	28′ 0″	24′ 5″	34′ 7″	31′ 5″	27′ 5″
1200S200-97	50	40′ 5″	32′ 1″	28′ 0″	39′ 8″	36′ 0″	31′ 6″ i	32′ 1″	29′ 2″	25′ 5″	36′ 0″	32′ 9″	28′ 7″
1200S250-97	50	42′ 0″	33′ 4″	29′ 1″	41′ 2″	37′ 5″	32′ 8″ i	33′ 4″	30′ 3″	26′ 5″	37′ 5″	34′ 0″	29′ 8″
1200S300-97	50	43′ 5″	34′ 6″	30′ 1″	42′ 7″	38′ 8″	33′ 10″ i	34′ 6″	31′ 4″	27′ 4″	38′ 8″	35′ 2″	30′ 9″

"e" Requires web stiffeners at end supports
"i" Requires web stiffeners at interior supports
"a" Requires web stiffeners at all supports

Interior Bearing Length = 3.5″
End Bearing Length = 3.5″
Alternate Span Loading Considered
Studs considered unpunched for web crippling and shear

Allowable Floor Joist Spans 10 psf Dead Load and 40 psf Live Load

Section	Fy (Ksi)	L/360 Live Load Deflection						L/480 Live Load Deflection					
		Single Span Spacing (in)			Two Equal Spans Spacing (in)			Single Span Spacing (in)			Two Equal Spans Spacing (in)		
		12	16	24	12	16	24	12	16	24	12	16	24
600S162-33	33	14′ 6″	9′ 8″ e	7′ 11″ e	11′ 2″ i	9′ 8″ a	7′ 11″ a	11′ 2″ e	9′ 8″ e	7′ 11″ e	11′ 2″ i	9′ 8″ a	7′ 11″ a
600S200-33	33	15′ 5″	10′ 4″ e	8′ 5″ e	11′ 11″ i	10′ 4″ a	8′ 2″ a	11′ 11″ e	10′ 4″ e	8′ 5″ e	11′ 11″ i	10′ 4″ a	8′ 2″ a
600S162-43	33	17′ 2″	12′ 0″ e	9′ 9″ e	13′ 10″ i	12′ 0″ i	9′ 9″ i	12′ 4″	11′ 2″	9′ 9″ e	13′ 10″ i	12′ 0″ i	9′ 9″ i
600S200-43	33	18′ 0″	12′ 4″ e	10′ 1″ e	14′ 3″ i	12′ 4″ i	10′ 1″ i	13′ 0″	11′ 9″	10′ 1″ e	14′ 3″ i	12′ 4″ i	10′ 1″ i
600S250-43	33	18′ 10″	12′ 8″ e	10′ 4″ e	14′ 8″ i	12′ 8″ i	10′ 4″ i	13′ 7″	12′ 4″ e	10′ 4″ e	14′ 8″ i	12′ 8″ i	10′ 4″ i
600S162-54	50	18′ 5″	13′ 3″	11′ 7″	16′ 4″	14′ 10″ i	13′ 0″ i	13′ 3″	12′ 0″	10′ 6″	14′ 10″	13′ 6″	11′ 10″ i
600S200-54	50	19′ 4″	13′ 11″	12′ 2″	17′ 3″	15′ 8″ i	13′ 6″ i	13′ 11″	12′ 8″	11′ 0″	15′ 8″	14′ 2″	12′ 5″ i
600S250-54	50	20′ 3″	14′ 7″	12′ 9″	18′ 0″ i	16′ 4″ i	13′ 10″ i	14′ 7″	13′ 3″	11′ 7″	16′ 4″	14′ 10″ i	13′ 0″ i
600S300-54	50	20′ 8″	14′ 11″	13′ 0″	18′ 5″ i	16′ 9″ i	14′ 0″ i	14′ 11″	13′ 7″	11′ 10″	16′ 9″	15′ 3″ i	13′ 3″ i
600S162-68	50	19′ 8″	14′ 2″	12′ 5″	17′ 7″	15′ 11″	13′ 11″ i	14′ 2″	12′ 11″	11′ 3″	15′ 11″	14′ 6″	12′ 8″
600S200-68	50	20′ 9″	14′ 11″	13′ 1″	18′ 6″	16′ 9″	14′ 8″ i	14′ 11″	13′ 7″	11′ 10″	16′ 9″	15′ 3″	13′ 4″
600S250-68	50	21′ 9″	15′ 8″	13′ 8″	19′ 4″	17′ 7″	15′ 4″ i	15′ 8″	14′ 3″	12′ 5″	17′ 7″	16′ 0″	13′ 11″ i
600S300-68	50	22′ 6″	16′ 3″	14′ 2″	20′ 0″	18′ 2″	15′ 11″ i	16′ 3″	14′ 9″	12′ 10″	18′ 2″	16′ 6″	14′ 5″ i
600S162-97	50	21′ 10″	15′ 9″	13′ 9″	19′ 6″	17′ 8″	15′ 5″	15′ 9″	14′ 4″	12′ 6″	17′ 8″	16′ 1″	14′ 0″
600S200-97	50	23′ 0″	16′ 7″	14′ 6″	20′ 6″	18′ 8″	16′ 3″	16′ 7″	15′ 1″	13′ 2″	18′ 8″	16′ 11″	14′ 9″
600S250-97	50	24′ 2″	17′ 5″	15′ 3″	21′ 6″	19′ 7″	17′ 1″	17′ 5″	15′ 10″	13′ 10″	19′ 7″	17′ 9″	15′ 6″
600S300-97	50	25′ 2″	18′ 1″	15′ 10″	22′ 5″	20″ 4″	17′ 9″	18′ 1″	16′ 5″	14′ 4″	20′ 4″	18′ 6″	16′ 2″
800S162-33	33	16′ 8″ e	11′ 2″ e	9′ 2″ e	12′ 3″ a	9′ 11″ a	7′ 3″ a	12′ 11″ e	11′ 2″ e	9′ 2″ e	12′ 3″ a	9′ 11″ a	7′ 3″ a
800S200-33	33	17′ 11″ e	12′ 0″ e	9′ 5″ e	12′ 9″ a	10′ 3″ a	7′ 5″ a	13′ 10″ e	12′ 0″ e	9′ 5″ e	12′ 9″ a	10′ 3″ a	7′ 5″ a
800S162-43	33	20′ 2″	13′ 6″ e	11′ 0″ e	15′ 7″ i	13′ 6″ i	11′ 0″ a	15′ 5″ e	13′ 6″ e	11′ 0″ e	15′ 7″ i	13′ 6″ i	11′ 0″ a
800S200-43	33	21′ 7″	14′ 5″ e	11′ 9″ e	16′ 8″ i	14′ 5″ i	11′ 9″ a	16′ 3″ e	14′ 5″ e	11′ 9″ e	16′ 8″ i	14′ 5″ i	11′ 9″ a
800S250-43	33	22′ 1″	14′ 10″ e	12′ 1″ e	17′ 1″ i	14′ 10″ i	12′ 1″ a	17′ 0″ e	14′ 10″ e	12′ 1″ e	17′ 1″ i	14′ 10″ i	12′ 1″ a
800S162-54	50	23′ 1″	16′ 7″	14′ 6″	20′ 6″ i	18′ 8″ i	14′ 9″ i	16′ 7″	15′ 1″	13′ 2″	18′ 8″ i	16′ 11″ i	14′ 9″ i
800S200-54	50	24′ 3″	17′ 6″	15′ 3″	21′ 7″ i	19′ 3″ i	15′ 9″ i	17′ 6″	15′ 11″	13′ 10″	19′ 8″ i	17′ 10″ i	15′ 7″ i
800S250-54	50	25′ 4″	18′ 3″	15′ 11″	22′ 7″ i	19′ 9″ i	16′ 1″ i	18′ 3″	16′ 7″	14′ 6″	20′ 6″ i	18′ 7″ i	16′ 1″ i
800S300-54	50	25′ 11″	18′ 8″	16′ 4″	23′ 1″ i	20′ 0″ i	16′ 4″ i	18′ 8″	17′ 0″	14′ 10″	21′ 0″ i	19′ 1″ i	16′ 4″ i
800S162-68	50	24′ 11″	17′ 11″	15′ 8″	22′ 2″	20′ 2″ i	17′ 4″ i	17′ 11″	16′ 3″	14′ 3″	20′ 2″	18′ 4″	16′ 0″ i
800S200-68	50	26′ 1″	18′ 9″	16′ 5″	23′ 3″	21′ 1″ i	18′ 5″ i	18′ 9″	17′ 1″	14′ 11″	21′ 1″	19′ 2″	16′ 9″ i
800S250-68	50	27′ 3″	19′ 7″	17′ 2″	24′ 3″	22′ 0″ i	18′ 11″ i	19′ 7″	17′ 10″	15′ 7″	22′ 0″	20′ 0″	17′ 6″ i
800S300-68	50	28′ 1″	20′ 3″	17′ 8″	25′ 0″	22′ 9″ i	19′ 2″ i	20′ 3″	18′ 5″	16′ 1″	22′ 9″	20′ 8″	18′ 0″ i
800S162-97	50	27′ 8″	19′ 11″	17′ 5″	24′ 8″	22′ 5″	19′ 7″	19′ 11″	18′ 1″	15′ 10″	22′ 5″	20′ 4″	17′ 9″
800S200-97	50	29′ 0″	20′ 11″	18′ 3″	25′ 10″	23′ 6″	20′ 6″	20′ 11″	19′ 0″	16′ 7″	23′ 6″	21′ 4″	18′ 7″
800S250-97	50	30′ 4″	21′ 10″	19′ 1″	27′ 0″	24′ 6″	21′ 5″	21′ 10″	19′ 10″	17′ 4″	24′ 6″	22′ 3″	19′ 6″
800S300-97	50	31′ 5″	22′ 8″	19′ 10″	28′ 0″	25′ 5″	22′ 3″	22′ 8″	20′ 7″	18′ 0″	25′ 5″	23′ 1″	20′ 2″
1000S162-43	33	22′ 4″ e	14′ 11″ e	12′ 2″ e	17′ 3″ a	14′ 11″ a	11′ 4″ a	17′ 3″ e	14′ 11″ e	12′ 2″ e	17′ 3″ a	14′ 11″ a	11′ 4″ a
1000S200-43	33	24′ 1″ e	16′ 2″ e	13′ 2″ e	18′ 8″ a	15′ 9″ a	11′ 8″ a	18′ 8″ e	16′ 2″ e	13′ 2″ e	18′ 8″ a	15′ 9″ a	11′ 8″ a
1000S250-43	33	24′ 9″ e	16′ 7″ e	13′ 6″ e	19′ 2″ a	16′ 2″ a	11′ 11″ a	19′ 2 e	16′ 7″ e	13′ 6′ e	19′ 2″ a	16′ 2″ a	11′ 11″ a
1000S162-54	50	27′ 5″	19′ 9″	16′ 4″	23′ 2″ i	20′ 1″ i	16′ 4″ i	19′ 9″	18′ 0″	15′ 8″	22′ 3″ i	20′ 1″ i	16′ 4″ i
1000S200-54	50	28′ 8″	20′ 8″	17′ 7″ e	24′ 11″ i	21′ 7″ i	17′ 7″ i	20′ 8″	18′ 9″	16′ 5″	23′ 2″ i	21′ 1″ i	17′ 7″ i
1000S250-54	50	30′ 3″	21′ 9″	18′ 1″ e	25′ 7″ i	22′ 2″ i	18′ 1″ i	21′ 9″	19′ 9″	17′ 3″ e	24′ 5″ i	22′ 2″ i	18′ 1″ i
1000S300-54	50	31′ 1″	22′ 5″	18′ 4″ e	25′ 11″ i	22′ 6″ i	18′ 4″ i	22′ 5″	20′ 4″	17′ 9″ e	25′ 2″ i	22′ 6″ i	18′ 4″ i
1000S162-68	50	29′ 9″	21′ 5″	18′ 9″	26′ 6″ i	23′ 8″ i	19′ 4″ i	21′ 5″	19′ 6″	17′ 0″	24′ 1″	21′ 10″ i	19′ 1″ i
1000S200-68	50	31′ 1″	22′ 5″	19′ 7″	27′ 8″ i	25′ 2″ i	20′ 8″ i	22′ 5″	20′ 4″	17′ 9″	25′ 2″	22′ 10″ i	19′ 11″ i
1000S250-68	50	32′ 6″	23′ 5″	20′ 5″	28′ 11″ i	26′ 1″ i	21′ 3″ i	23′ 5″	21′ 3″	18′ 7″	26′ 4″	23′ 11″ i	20′ 10″ i
1000S300-68	50	33′ 6″	24′ 2″	21′ 1″	29′ 10″ i	26′ 6″ i	21′ 7″ i	24′ 2″	21′ 11″	19′ 2″	27′ 1″	24′ 8″ i	21′ 6″ i
1000S162-97	50	33′ 4″	24′ 0″	21′ 0″	29′ 8″	26′ 11″	23′ 7″ i	24′ 0″	21′ 10″	19′ 1″	26′ 11″	24′ 6″	21′ 5″
1000S200-97	50	34′ 9″	25′ 1″	21′ 11″	31′ 0″	28′ 2″	24′ 7″ i	25′ 1″	22′ 9″	19′ 11″	28′ 2″	25′ 7″	22′ 4″
1000S250-97	50	36′ 3″	26′ 1″	22′ 10″	32′ 3″	29′ 4″	25′ 7″ i	26′ 1″	23′ 9″	20′ 9″	29′ 4″	26′ 8″	23′ 3″
1000S300-97	50	37′ 7″	27′ 1″	23′ 8″	33′ 6″	30′ 5″	26′ 7″ i	27′ 1″	24′ 7″	21′ 6″	30′ 5″	27′ 7″	24′ 1″
1200S162-54	50	31′ 8″ e	21′ 7″ e	17′ 7″ e	24′ 11″ a	21′ 7″ a	17′ 7″ a	22′ 10″ e	20′ 9″ e	17′ 7″ e	24′ 11″ a	21′ 7″ a	17′ 7″ a
1200S200-54	50	33′ 0″ e	23′ 4″ e	19′ 1″ e	27′ 0″ a	23′ 4″ a	18′ 1″ a	23′ 9″ e	21′ 7″ e	18′ 10″ e	26′ 8″ a	23′ 4″ a	18′ 1″ a
1200S250-54	50	34′ 4″ e	24′ 1″ e	19′ 8″ e	27′ 10″ a	24′ 1″ a	18′ 3″ a	24′ 9″ e	22′ 6″ e	19′ 8″ e	27′ 10″ a	24′ 1″ a	18′ 3″ a
1200S300-54	50	36′ 0″ e	24′ 7″ e	20′ 1″ e	28′ 5″ a	24′ 7″ a	18′ 6″ a	25′ 11″ e	23′ 7″ e	20′ 1″ e	28′ 5″ a	24′ 7″ a	18′ 6″ a
1200S162-68	50	34′ 5″	24′ 9″	20′ 11″	29′ 8″ i	25′ 8″ i	20′ 11″ i	24′ 9″	22′ 6″	19′ 8″	27′ 10″ i	25′ 3″ i	20′ 11″ i
1200S200-68	50	35′ 10″	25′ 10″	22′ 7″	31′ 11″ i	27′ 8″ i	22′ 7″ i	25′ 10″	23′ 5″	20′ 6″	29′ 0″ i	26′ 4″ i	22′ 7″ i
1200S250-68	50	37′ 3″	26′ 10″	23′ 3″	32′ 11″ i	28′ 6″ i	23′ 3″ i	26′ 10″	24′ 5″	21′ 4″	30′ 2″ i	27′ 5″ i	23′ 3″ i
1200S300-68	50	38′ 9″	27′ 11″	23′ 9″	33′ 7″ i	29′ 1″ i	23′ 9″ i	27′ 11″	25′ 5″	22′ 2″	31′ 5″ i	28′ 6″ i	23′ 9″ i
1200S162-97	50	38′ 10″	28′ 0″	24′ 5″	34′ 7″	31′ 5″	27′ 2″ i	28′ 0″	25′ 5″	22′ 3″	31′ 5″	28′ 7″	24′ 11″ i
1200S200-97	50	40′ 5″	29′ 2″	25′ 5″	36′ 0″	32′ 9″	28′ 7″ i	29′ 2″	26′ 6″	23′ 1″	32′ 9″	29′ 9″	26′ 0″ i
1200S250-97	50	42′ 0″	30′ 3″	26′ 5″	37′ 5″	34′ 0″	29′ 8″ i	30′ 3″	27′ 6″	24′ 0″	34′ 0″	30′ 11″	27′ 0″ i
1200S300-97	50	43′ 5″	31′ 4″	27′ 4″	38′ 8″	35′ 2″	30′ 7″ i	31′ 4″	28′ 5″	24′ 10″	35′ 2″	31′ 11″	27′ 11″ i

"e" Requires web stiffeners at end supports
"i" Requires web stiffeners at interior supports
"a" Requires web stiffeners at all supports

Interior Bearing Length = 3.5″
End Bearing Length = 3.5″
Alternate Span Loading Considered
Studs considered unpunched for web crippling and shear

Allowable Floor Joist Spans 10 psf Dead Load and 50 psf Live Load

Section	Fy (Ksi)	L/360 Live Load Deflection						L/480 Live Load Deflection					
		Single Span Spacing (in)			Two Equal Spans Spacing (in)			Single Span Spacing (in)			Two Equal Spans Spacing (in)		
		12	16	24	12	16	24	12	16	24	12	16	24
600S162-33	33	10′ 3″ e	8′ 10″ e	7′ 3″ e	10′ 3″ a	8′ 10″ a	7′ 0″ a	10′ 3″ e	8′ 10″ e	7′ 3″ e	10′ 3″ i	8′ 10″ a	7′ 0″ a
600S200-33	33	10′ 11″ e	9′ 5″ e	7′ 8″ e	10′ 11″ a	9′ 5″ a	7′ 2″ a	10′ 11″ e	9′ 5″ e	7′ 8″ e	10′ 11″ a	9′ 5″ a	7′ 2″ a
600S162-43	33	12′ 7″	10′ 11″ e	8′ 11″ e	12′ 8″ i	10′ 11″ i	8′ 11″ a	11′ 5″	10′ 5″ e	8′ 11″ e	12′ 8″ i	10′ 11″ i	8′ 11″ a
600S200-43	33	13′ 0″	11′ 3″ e	9′ 2″ e	13′ 0″ i	11′ 3″ i	9′ 2″ a	12′ 0″	10′ 11″ e	9′ 2″ e	13′ 0″ i	11′ 3″ i	9′ 2″ a
600S250-43	33	13′ 5″ e	11′ 7″ e	9′ 5″ e	13′ 5″ i	11′ 7″ i	9′ 5″ a	12′ 7″	11′ 5″ e	9′ 5″ e	13′ 5″ i	11′ 7″ i	9′ 5″ a
600S162-54	50	13′ 6″	12′ 3″	10′ 9″	15′ 2″	13′ 10″ i	11′ 11″ i	12′ 3″	11′ 2″	9′ 9″	13′ 10″	12′ 6″ i	10′ 11″ i
600S200-54	50	14′ 3″	12′ 11″	11′ 3″	16′ 0″ i	14′ 6″ i	12′ 4″ i	12′ 11″	11′ 9″	10′ 3″	14′ 6″	13′ 2″ i	11′ 6″ i
600S250-54	50	14′ 11″	13′ 6″	11′ 10″	16′ 9″ i	15′ 2″ i	12′ 7″ i	13′ 6″	12′ 3″	10′ 9″	15′ 2″	13′ 10″ i	12′ 1″ i
600S300-54	50	15′ 3″	13′ 10″	12′ 1″	17′ 1″ i	15′ 7″ i	12′ 9″ i	13′ 10″	12′ 7″	11′ 0″	15′ 7″	14′ 2″ i	12′ 4″ i
600S162-68	50	14′ 6″	13′ 2″	11′ 6″	16′ 4″	14′ 10″	12′ 11″ i	13′ 2″	12′ 0″	10′ 5″	14′ 10″	13′ 5″	11′ 9″
600S200-68	50	15′ 3″	13′ 10″	12′ 1″	17′ 2″	15′ 7″	13′ 7″ i	13′ 10″	12′ 7″	11′ 0″	15′ 7″	14′ 2″	12′ 4″
600S250-68	50	16′ 0″	14′ 6″	12′ 8″	18′ 0″	16′ 4″ i	14′ 3″ i	14′ 6″	13′ 2″	11′ 6″	16′ 4″	14′ 10″	12′ 11″ i
600S300-68	50	16′ 7″	15′ 1″	13′ 2″	18′ 7″	16′ 11″ i	14′ 9″ i	15′ 1″	13′ 8″	11′ 11″	16′ 11″	15′ 4″	13′ 5″ i
600S162-97	50	16′ 1″	14′ 7″	12′ 9″	18′ 1″	16′ 5″	14′ 4″	14′ 7″	13′ 3″	11′ 7″	16′ 5″	14′ 11″	13′ 0″
600S200-97	50	16′ 11″	15′ 5″	13′ 5″	19′ 0″	17′ 3″	15′ 1″	15′ 5″	14′ 0″	12′ 3″	17′ 3″	15′ 8″	13′ 9″
600S250-97	50	17′ 10″	16′ 2″	14′ 1″	20′ 0″	18′ 2″	15′ 10″	16′ 2″	14′ 8″	12′ 10″	18′ 2″	16′ 6″	14′ 5″
600S300-97	50	18′ 6″	16′ 10″	14′ 8″	20′ 9″	18′ 11″	16′ 6″	16′ 10″	15′ 3″	13′ 4″	18′ 11″	17′ 2″	15′ 0″
800S162-33	33	11′ 10″ e	10′ 3″ e	7′ 10″ e	10′ 9″ a	8′ 8″ a	6′ 3″ a	11′ 10″ e	10′ 3″ e	7′ 10″ e	10′ 9″ a	8′ 8″ a	6′ 3″ a
800S200-33	33	12′ 8″ e	11′ 0″ e	7′ 10″ e	11′ 1″ a	8′ 11″ a	6′ 3″ a	12′ 8″ e	11′ 0″ e	7′ 10″ e	11′ 1″ a	8′ 11″ a	6′ 3″ a
800S162-43	33	14′ 3″ e	12′ 4″ e	10′ 1″ e	14′ 3″ i	12′ 4″ i	10′ 1″ a	14′ 3″ e	12′ 4″ e	10′ 1″ e	14′ 3″ i	12′ 4″ i	10′ 1″ a
800S200-43	33	15′ 3″ e	13′ 2″ e	10′ 9″ e	15′ 3″ i	13′ 2″ a	10′ 9″ a	15′ 1″ e	13′ 2″ e	10′ 9″ e	15′ 3″ i	13′ 2″ a	10′ 9″ a
800S250-43	33	15′ 7″ e	13′ 6″ e	11′ 0″ e	15′ 7″ i	13′ 6″ a	11′ 0″ a	15′ 7″ e	13′ 6″ e	11′ 0″ e	15′ 7″ i	13′ 6″ a	11′ 0″ a
800S162-54	50	17′ 0″	15′ 5″	13′ 6″	19′ 1″ i	16′ 6″ i	13′ 6″ i	15′ 5″	14′ 0″	12′ 3″	17′ 4″ i	15′ 9″ i	13′ 6″ i
800S200-54	50	17′ 10″	16′ 3″	14′ 2″	20′ 1″ i	17′ 7″ i	14′ 4″ i	16′ 3″	14′ 9″	12′ 10″	18′ 3″ i	16′ 7″ i	14′ 4″ i
800S250-54	50	18′ 8″	16′ 11″	14′ 8″ e	20′ 10″ i	18′ 0″ i	14′ 8″ i	16′ 11″	15′ 5″	13′ 5″	19′ 0″ i	17′ 3″ i	14′ 8″ i
800S300-54	50	19′ 1″	17′ 4″	14′ 11″ e	21′ 1″ i	18′ 3″ i	14′ 11″ i	17′ 4″	15′ 9″	13′ 9″	19′ 6″ i	17′ 8″ i	14′ 11″ i
800S162-68	50	18′ 4″	16′ 8″	14′ 6″	20′ 7″	18′ 8″ i	15′ 9″ i	16′ 8″	15′ 1″	13′ 2″	18′ 8″	17′ 0″	14′ 10″ i
800S200-68	50	19′ 2″	17′ 5″	15′ 3″	21′ 7″	19′ 7″ i	17′ 1″ i	17′ 5″	15′ 10″	13′ 10″	19′ 7″	17′ 9″	15′ 6″ i
800S250-68	50	20′ 0″	18′ 2″	15′ 11″	22′ 6″ i	20′ 5″ i	17′ 3″ i	18′ 2″	16′ 6″	14′ 5″	20′ 5″	18′ 7″ i	16′ 3″ i
800S300-68	50	20′ 8″	18′ 10″	16′ 5″	23′ 3″ i	21′ 1″ i	17′ 6″ i	18′ 10″	17′ 1″	14′ 11″	21′ 1″	19′ 2″ i	16′ 9″ i
800S162-97	50	20′ 4″	18′ 6″	16′ 2″	22′ 10″	20′ 9″	18′ 2″	18′ 6″	16′ 10″	14′ 8″	20′ 9″	18′ 10″	16′ 6″
800S200-97	50	21′ 4″	19′ 5″	16′ 11″	24′ 0″	21′ 9″	19′ 0″	19′ 5″	17′ 7″	15′ 5″	21′ 9″	19′ 9″	17′ 3″
800S250-97	50	22′ 4″	20′ 3″	17′ 8″	25′ 1″	22′ 9″	19′ 11″	20′ 3″	18′ 5″	16′ 1″	22′ 9″	20′ 8″	18′ 1″
800S300-97	50	23′ 2″	21′ 0″	18′ 4″	26′ 0″	23′ 8″	20′ 8″ i	21′ 0″	19′ 1″	16′ 8″	23′ 8″	21′ 6″	18′ 9″
1000S162-43	33	15′ 9″ e	13′ 8″ e	11′ 2″ e	15′ 9″ a	13′ 4″ a	9′ 10″ a	15′ 9″ e	13′ 8″ e	11′ 2″ e	15′ 9″ a	13′ 4″ a	9′ 10″ a
1000S200-43	33	17′ 0″ e	14′ 9″ e	12′ 0″ e	17′ 0″ a	13′ 9″ a	10′ 2″ a	17′ 0″ e	14′ 9″ e	12′ 0″ e	17′ 0″ a	13′ 9″ a	10′ 2″ a
1000S250-43	33	17′ 6″ e	15′ 2″e	12′ 4″ e	17′ 5″ a	14′ 2″ a	10′ 4″ a	17′ 6″ e	15′ 2″ e	12′ 4″ e	17′ 5″ a	14′ 2″ a	10′ 4″ a
1000S162-54	50	20′ 3″	18′ 4″	14′ 11″ e	21′ 2″ i	18′ 4″ i	14′ 11″ i	18′ 4″	16′ 8″	14′ 7″ e	20′ 7″ i	18′ 4″ i	14′ 11″ i
1000S200-54	50	21′ 1″	19′ 2″	16′ 1″ e	22′ 9″ i	19′ 8″ i	16′ 1″ i	19′ 2″	17′ 5″	15′ 3″ e	21′ 6″ i	19′ 7″ i	16′ 1″ i
1000S250-54	50	22′ 3″	20′ 2″	16′ 6″ e	23′ 4″ i	20′ 2″ i	16′ 6″ i	20′ 3″	18′ 4″	16′ 0″ e	22′ 8″ i	20′ 2″ i	16′ 6″ i
1000S300-54	50	22′ 10″	20′ 6″	16′ 9″ e	23′ 8″ i	20′ 6″ i	16′ 9″ i	20′ 9″	18′ 10″	16′ 6″ e	23′ 4″ i	20′ 6″ a	16′ 9″ i
1000S162-68	50	21′ 11″	19′ 11″	17′ 4″	24′ 7″ i	21′ 8″ i	17′ 8″ i	19′ 11″	18′ 1″	15′ 9″	22′ 4″	20′ 4″ i	17′ 8″ i
1000S200-68	50	22′ 10″	20′ 9″	18′ 2″	25′ 8″ i	23′ 2″ i	18′ 11″ i	20′ 9″	18′ 10″	16′ 6″	23′ 4″ i	21′ 2″ i	18′ 6″ i
1000S250-68	50	23′ 11″	21′ 9″	19′ 0″	26′ 10″ i	23′ 9″ i	19′ 5″ i	21′ 9″	19′ 9″	17′ 3″	24′ 5″ i	22′ 2″ i	19′ 4″ i
1000S300-68	50	24′ 8″	22′ 5″	19′ 7″	27′ 8″ i	24′ 2″ i	19′ 9″ i	22′ 5″	20′ 4″	17′ 9″	25′ 2″ i	22′ 10″ i	19′ 9″ i
1000S162-97	50	24′ 6″	22′ 3″	19′ 6″	27′ 7″	25′ 0″	21′ 10″ i	22′ 3″	20′ 3″	17′ 8″	25′ 0″	22′ 9″	19′ 10″
1000S200-97	50	25′ 7″	23′ 3″	20′ 4″	28′ 9″	26′ 2″	22′ 10″ i	23′ 3″	21′ 2″	18′ 6″	26′ 2″	23′ 9″	20′ 9″
1000S250-97	50	26′ 8″	24′ 3″	21′ 2″	30′ 0″	27′ 3″	23′ 9″ i	24′ 3″	22′ 0″	19′ 3″	27′ 3″	24′ 9″	21′ 7″
1000S300-97	50	27′ 8″	25′ 2″	21′ 11″	31′ 1″	28′ 3″	24′ 8″ i	25′ 2″	22′ 10″	19′ 11″	28′ 3″	25′ 8″	22′ 5″ i
1200S162-54	50	22′ 9″ e	19′ 8″ e	16′ 1″ e	22′ 9″ a	19′ 8″ a	15′ 6″ a	21′ 2″ e	19′ 3″ e	16′ 1″ e	22′ 9″ a	19′ 8″ a	15′ 6″ a
1200S200-54	50	24′ 4″ e	21′ 4″ e	17′ 5″ e	24′ 7″ a	21′ 3″ a	15′ 10″ a	22′ 1″ e	20′ 1″ e	17′ 5″ e	24′ 7″ a	21′ 3″ a	15′ 10″ a
1200S250-54	50	25′ 4″ e	22′ 0″ e	18′ 0″ e	25′ 5″ a	21′ 6″ a	15′ 11″ a	23′ 0″ e	20′ 10″ e	18′ 0″ e	25′ 5″ a	21′ 6″ a	15′ 11″ a
1200S300-54	50	25′ 11″ e	22′ 5″ e	18′ 4″ e	25′ 11″ a	21′ 10″ a	16′ 2″ a	24′ 1″ e	21′ 11″ e	18′ 4″ e	25′ 11″ a	21′ 10″ a	16′ 2″ a
1200S162-68	50	25′ 4″	23′ 0″	19′ 2″	27′ 1″ i	23′ 5″ i	19′ 2″ i	23′ 0″	20′ 11″	18′ 3″	25′ 10″ i	23′ 5″ i	19′ 2″ i
1200S200-68	50	26′ 5″	24′ 0″	20′ 7″ e	29′ 1″ i	25′ 3″ i	20′ 7″ i	24′ 0″	21′ 9″	19′ 0″	26′ 11″ i	24′ 5″ i	20′ 7″ i
1200S250-68	50	27′ 5″	24′ 11″	21′ 3″ e	30′ 1″ i	26′ 0″ i	21′ 3″ i	24′ 11″	22′ 8″	19′ 9″	28′ 0″ i	25′ 5″ i	21′ 3″ i
1200S300-68	50	28′ 7″	25′ 11″	21′ 8″ e	30′ 8″ i	26′ 6″ i	21′ 8″ i	25′ 11″	23′ 7″	20′ 7″ e	29′ 2″ i	26′ 6″ i	21′ 8″ a
1200S162-97	50	28′ 7″	26′ 0″	22′ 8″	32′ 1″	29′ 2″ i	24′ 10″ i	26′ 0″	23′ 7″	20′ 7″	29′ 2″	26′ 6″	23′ 2″ i
1200S200-97	50	29′ 9″	27′ 1″	23′ 8″	33′ 5″	30′ 5″ i	26′ 6″ i	27′ 1″	24′ 7″	21′ 6″	30′ 5″	27′ 7″	24′ 1″ i
1200S250-97	50	30′ 11″	28′ 1″	24′ 7″	34′ 9″	31′ 7″ i	27′ 5″ i	28′ 1″	25′ 6″	22′ 4″	31′ 7″	28′ 8″	25′ 0″ i
1200S300-97	50	32′ 0″	29′ 1″	25′ 5″	35′ 11″	32′ 8″ i	27′ 11″ i	29′ 1″	26′ 5″	23′ 1″	32′ 8″	29′ 8″	25′ 11″ i

"e" Requires web stiffeners at end supports
"i" Requires web stiffeners at interior supports
"a" Requires web stiffeners at all supports

Interior Bearing Length = 3.5″
End Bearing Length = 3.5″
Alternate Span Loading Considered
Studs considered unpunched for web crippling and shear

Allowable Floor Joist Spans 30 psf Dead Load and 100 psf Live Load

Section	Fy (Ksi)	L/360 Live Load Deflection						L/480 Live Load Deflection					
		Single Span Spacing (in)			Two Equal Spans Spacing (in)			Single Span Spacing (in)			Two Equal Spans Spacing (in)		
		12	16	24	12	16	24	12	16	24	12	16	24
600S162-33	33	6′ 11″ e	6′ 0″ e	4′ 10″ e	6′ 7″ a	5′ 4″ a	3′ 10″ a	6′ 11″ e	6′ 0″ e	4′ 10″ e	6′ 7″ a	5′ 4″ a	3′ 10″ a
600S200-33	33	7′ 5″ e	6′ 5″ e	4′ 10″ e	6′ 9″ a	5′ 5″ a	3′ 11″ a	7′ 5″ e	6′ 5″ e	4′ 10″ e	6′ 9″ a	5′ 5″ a	3′ 11″ a
600S162-43	33	8′ 7″ e	7′ 5″ e	6′ 1″ e	8′ 7″ a	7′ 5″ a	6′ 1″ a	8′ 7″ e	7′ 5″ e	6′ 1″ e	8′ 7″ a	7′ 5″ a	6′ 1″ a
600S200-43	33	8′ 10″ e	7′ 8″ e	6′ 3″ e	8′ 10″ a	7′ 8″ a	6′ 3″ a	8′ 10″ e	7′ 8″ e	6′ 3″ e	8′ 10″ a	7′ 8″ a	6′ 3″ a
600S250-43	33	9′ 1″ e	7′ 10″ e	6′ 5″ e	9′ 1″ a	7′ 10″ a	6′ 5″ a	9′ 1″ e	7′ 10″ e	6′ 5″ e	9′ 1″ a	7′ 10″ a	6′ 5″ a
600S162-54	50	10′ 9″	9′ 9″	8′ 1″ e	11′ 6″ i	9′ 11″ i	8′ 1″ i	9′ 9″	8′ 10″	7′ 9″ e	10′ 11″ i	9′ 11″ i	8′ 1″ i
600S200-54	50	11′ 3″	10′ 3″	8′ 4″ e	11′ 10″ i	10′ 3″ i	8′ 4″ i	10′ 3″	9′ 4″	8′ 1″ e	11′ 6″ i	10′ 3″ i	8′ 4″ i
600S250-54	50	11′ 10″	10′ 6″ e	8′ 6″ e	12′ 1″ i	10′ 6″ i	8′ 6″ i	10′ 9″	9′ 9″	8′ 6″ e	12′ 1″ i	10′ 6″ i	8′ 6″ i
600S300-54	50	12′ 1″	10′ 8″ e	8′ 8″ e	12′ 3″ i	10′ 8″ i	8′ 8″ i	11′ 0″	10′ 0″	8′ 8″ e	12′ 3″ i	10′ 8″ i	8′ 8″ i
600S162-68	50	11′ 6″	10′ 5″	9′ 1″	12′ 11″ i	11′ 8″ i	9′ 6″ i	10′ 5″	9′ 6″	8′ 3″	11′ 9″ i	10′ 8″ i	9′ 4″ i
600S200-68	50	12′ 1″	11′ 0″	9′ 7″	13′ 7″ i	12′ 4″ i	10′ 1″ i	11′ 0″	10′ 0″	8′ 9″	12′ 4″ i	11′ 3″ i	9′ 10″ i
600S250-68	50	12′ 8″	11′ 6″	10′ 0″	14′ 1″ i	12′ 3″ i	10′ 0″ i	11′ 6″	10′ 6″	9′ 2″	12′ 11″ i	11′ 9″ i	10′ 0″ i
600S300-68	50	13′ 2″	11′ 11″	10′ 2″	14′ 4″ i	12′ 5″ i	10′ 2″ i	11′ 11″	10′ 10″	9′ 6″	13′ 5″ i	12′ 2″ i	10′ 2″ i
600S162-97	50	12′ 9″	11′ 7″	10′ 1″	14′ 4″	13′ 0″	11′ 4″ i	11′ 7″	10′ 6″	9′ 2″	13′ 0″	11′ 10″	10′ 4″ i
600S200-97	50	13′ 5″	12′ 3″	10′ 8″	15′ 1″	13′ 9″	12′ 0″ i	12′ 3″	11′ 1″	9′ 8″	13′ 9″	12′ 5″	10′ 11″ i
600S250-97	50	14′ 1″	12′ 10″	11′ 2″	15′ 10″	14′ 5″ i	12′ 7″ i	12′ 10″	11′ 8″	10′ 2″	14′ 5″	13′ 1″	11′ 5″ i
600S300-97	50	14′ 8″	13′ 4″	11′ 8″	16′ 6″	15′ 0″ i	12′ 10″ i	13′ 4″	12′ 1″	10′ 7″	15′ 0″	13′ 7″	11′ 11″ i
800S162-33	33	7′ 3″ e	5′ 5″ e	3′ 7″ e	5′ 10″ a	4′ 4″ a	2′ 11″ a	7′ 3″ e	5′ 5″ e	3′ 7″ e	5′ 10″ a	4′ 4″ a	2′ 11″ a
800S200-33	33	7′ 3″ e	5′ 5″ e	3′ 7″ e	5′ 10″ a	4′ 4″ a	2′ 11″ a	7′ 3″ e	5′ 5″ e	3′ 7″ e	5′ 10″ a	4′ 4″ a	2′ 11″ a
800S162-43	33	9′ 8″ e	8′ 4″ e	6′ 10″ e	9′ 8″ a	7′ 10″ a	5′ 10″ a	9′ 8″ e	8′ 4″ e	6′ 10″ e	9′ 8″ a	7′ 10″ a	5′ 10″ a
800S200-43	33	11′ 4″ e	8′ 11″ e	7′ 4″ e	10′ 4″ a	8′ 4″ a	6′ 1″ a	10′ 4″ e	8′ 11″ e	7′ 4″ e	10′ 4″ a	8′ 4″ a	6′ 1″ a
800S250-43	33	10′ 7″ e	9′ 2″ e	7′ 6″ e	10′ 5″ a	8′ 5″ a	6′ 2″ a	10′ 7″ e	9′ 2″ e	7′ 6″ e	10′ 5″ a	8′ 5″ a	6′ 2″ a
800S162-54	50	12′ 11″	11′ 2″ e	9′ 2″ e	12′ 11″ i	11′ 2″ i	9′ 2″ a	12′ 3″	11′ 1″ e	9′ 2″ e	12′ 11″ i	11′ 2″ i	9′ 2″ a
800S200-54	50	13′ 10″ e	11′ 11″ e	9′ 9″ e	13′ 10″ i	11′ 11″ i	9′ 9″ a	12′ 10″	11′ 8″ e	9′ 9″ e	13′ 10″ i	11′ 11″ i	9′ 9″ a
800S250-54	50	14′ 1″ e	12′ 3″ e	10′ 0″ e	14′ 1″ i	12′ 3″ i	10′ 0″ a	13′ 5″ e	12′ 2″ e	10′ 0″ e	14′ 1″ i	12′ 3″ i	10′ 0″ a
800S300-54	50	14′ 4″ e	12′ 5″ e	10′ 1″ e	14′ 4″ i	12′ 5″ i	10′ 0″ a	13′ 9″ e	12′ 5″ e	10′ 1″ e	14′ 4″ i	12′ 5″ i	10′ 0″ a
800S162-68	50	14′ 6″	13′ 2″	10′ 9″ e	15′ 2″ i	13′ 2″ i	10′ 9″ i	13′ 2″	12′ 0″	10′ 6″ e	14′ 10″ i	13′ 2″ i	10′ 9″ i
800S200-68	50	15′ 3″	13′ 10″	11′ 10″ e	16′ 8 ″ i	14′ 6″ i	11′ 10″ i	13′ 10″	12′ 7″	11′ 0″ e	15′ 6″ i	14′ 1″ i	11′ 10″ i
800S250-68	50	15′ 11″	14′ 4″	11′ 8″ e	16′ 7″ i	14′ 4″ i	11′ 8″ i	14′ 5″	13′ 1″	11′ 5″ e	16′ 3″ i	14′ 4″ i	11′ 8″ i
800S300-68	50	16′ 5″	14′ 7″	11′ 11″ e	16′ 10″ i	14′ 7″ i	11′ 11″ i	14′ 11″	13′ 6″	11′ 10″ e	16′ 9″ i	14′ 7″ i	11′ 11″ i
800S162-97	50	16′ 2″	14′ 8″	12′ 10″	18′ 2″ i	16′ 6″ i	13′ 6″ i	14′ 8″	13′ 4″	11′ 8″	16′ 6″	15′ 0″ i	13′ 1″ i
800S200-97	50	16′ 11″	15′ 5″	13′ 5″	19′ 0″	17′ 3″ i	15′ 1″ i	15′ 5″	14′ 0″	12′ 2″	17′ 3″	15′ 8″ i	13′ 8″ i
800S250-97	50	17′ 8″	16′ 1″	14′ 1″	19′ 11″ i	18′ 1″ i	15′ 5″ i	16′ 1″	14′ 7″	12′ 9″	18′ 1″	16′ 5″ i	14′ 4″ i
800S300-97	50	18′ 4″	16′ 8″	14′ 7″	20′ 8″ i	18′ 7″ i	15′ 2″ i	16′ 8″	15′ 2″	13′ 3″	18′ 9″	17′ 0″ i	14′ 10″ i
1000S162-43	33	10′ 8″ e	9′ 3″ e	6′ 5″ e	9′ 3″ a	7′ 5″ a	5′ 1″ a	10′ 8″ e	9′ 3″ e	6′ 5″ e	9′ 3″ a	7′ 5″ a	5′ 1″ a
1000S200-43	33	11′ 6″ e	9′ 7″ e	6′ 5″ e	9′ 6″ a	7′ 7″ a	5′ 1″ a	11′ 6″ e	9′ 7″ e	6′ 5″ e	9′ 6″ a	7′ 7″ a	5′ 1″ a
1000S250-43	33	11′ 10″ e	9′ 7″ e	6′ 5″ e	9′ 9″ a	7′ 8″ a	5′ 1″ a	11′ 10″ e	9′ 7″ e	6′ 5″ e	9′ 9″ a	7′ 8″ a	5′ 1″ a
1000S162-54	50	14′ 4″ e	12′ 5″ e	10′ 2″ e	14′ 4″ i	12′ 3″ i	9′ 1″ a	14′ 4″ e	12′ 5″ e	10′ 2″ e	14′ 4″ i	12′ 3″ i	9′ 1″ a
1000S200-54	50	15′ 5″ e	13′ 4″ e	10′ 11″ e	15′ 5″ i	12′ 6″ i	9′ 3″ a	15′ 3″ e	13′ 4″ e	10′ 11″ e	15′ 5″ i	12′ 6″ i	9′ 3″ a
1000S250-54	50	15′ 10″ e	13′ 9″ e	11′ 2″ e	15′ 10″ i	12′ 10″ i	9′ 5″ a	15′ 10″ e	13′ 9″ e	11′ 2″ e	15′ 10″ i	12′ 10″ i	9′ 5″ a
1000S300-54	50	16′ 1″ e	13′ 11″ e	11′ 4″ e	15′ 11″ i	12′ 11″ i	9′ 5″ a	16′ 1″ e	13′ 11″ e	11′ 4″ e	15′ 11″ i	12′ 11″ i	9′ 5″ a
1000S162-68	50	16′ 11″	14′ 8″ e	12′ 0″ e	16′ 11″ i	14′ 8″ i	12′ 0″ i	15′ 9″	14′ 4″	12′ 0″ e	16′ 11″ i	14′ 8″ i	12′ 0″ i
1000S200-68	50	18′ 2″	15′ 9″ e	12′ 10″ e	18′ 2″ i	15′ 9″ i	12′ 10″ i	16′ 6″	15′ 0″ e	12′ 10″ e	18′ 2″ i	15′ 9″ i	12′ 10″ i
1000S250-68	50	18′ 8″	16′ 2″ e	13′ 2″ e	18′ 8″ i	16′ 2″ i	13′ 2″ a	17′ 3″	15′ 8″ e	13′ 2″ e	18′ 8″ i	16′ 2″ i	13′ 2″ a
1000S300-68	50	18′ 11″	16′ 5″ e	13′ 5″ e	18′ 11″ i	16′ 5″ i	13′ 5″ a	17′ 9″	16′ 2″ e	13′ 5″ e	18′ 11″ i	16′ 5″ i	13′ 5″ a
1000S162-97	50	19′ 6″	17′ 8″	15′ 4″	21′ 9″ i	18′ 10″ i	15′ 4″ i	17′ 8″	16′ 1″	14′ 0″	19′ 10″ i	18′ 0″ i	15′ 4″ i
1000S200-97	50	20′ 4″	18′ 6″	16′ 1″	22′ 10″ i	20′ 0″ i	16′ 4″ i	18′ 6″	16′ 9″	14′ 8″	20′ 9″ i	18′ 10″ i	16′ 4″ i
1000S250-97	50	21′ 2″	19′ 3″	16′ 9″	23′ 9″ i	21′ 5″ i	17′ 6″ i	19′ 3″	17′ 6″	15′ 3″	21′ 7″ i	19′ 7″ i	17′ 2″ i
1000S300-97	50	21′ 11″	19′ 11″	17′ 2″	24′ 4″ i	21′ 1″ i	17′ 2″ i	19′ 11″	18′ 1″	15″ 10″	22′ 5″ i	20′ 4″ i	17′ 2″ i
1200S162-54	50	15′ 5″ e	13′ 4″ e	10′ 7″ e	14′ 7″ a	11′ 9″ a	8′ 5″ a	15′ 5″ e	13′ 4″ e	10′ 7″ e	14′ 7″ a	11′ 9″ a	8′ 5″ a
1200S200-54	50	16′ 9″ e	14′ 6″ e	10′ 7″ e	14′ 11″ a	11′ 11″ a	8′ 5″ a	16′ 9″ e	14′ 6″ e	10′ 7″ e	14′ 11″ a	11′ 11″ a	8′ 5″ a
1200S250-54	50	17′ 3″ e	14′ 11″ e	10′ 7″ e	15′ 0″ a	12′ 0″ a	8′ 5″ a	17′ 3″ e	14′ 11″ e	10′ 7″ e	15′ 0″ a	12′ 0″ a	8′ 5″ a
1200S300-54	50	17′ 7″ e	15′ 3″ e	10′ 7″ e	15′ 3″ a	12′ 2″ a	8′ 5″ a	17′ 7″ e	15′ 3″ e	10′ 7″ e	15′ 3″ a	12′ 2″ a	8′ 5″ a
1200S162-68	50	18′ 4″	15′ 11″ e	13′ 0″ e	18′ 4″ i	15′ 11″ i	13′ 0″ a	18′ 3″	15′ 11″ e	13′ 0″ e	18′ 4″ i	15′ 11″ i	13′ 0″ a
1200S200-68	50	19′ 9″ e	17′ 1″ e	14′ 0″ e	19′ 9″ i	17′ 1″ i	13′ 8″ a	19′ 0″ e	17′ 1″ e	14′ 0″ e	19′ 9″ i	17′ 1″ i	13′ 8″ a
1200S250-68	50	20′ 5″ e	17′ 8″ e	14′ 5″ e	20′ 5″ i	17′ 8″ i	13′ 9″ a	19′ 9″ e	17′ 8″ e	14′ 5″ e	20′ 5″ i	17′ 8″ i	13′ 9″ a
1200S300-68	50	20′ 10″ e	18′ 0″ e	14′ 8″ e	20′ 10″ i	18′ 0″ i	14′ 1″ a	20′ 7″ e	18′ 0″ e	14′ 8″ e	20′ 10″ i	18′ 0″ i	14′ 1″ a
1200S162-97	50	22′ 8″	20′ 7″	16′ 10″	23′ 10″ i	20′ 8″ i	16′ 10″ i	20′ 7″	18′ 9″	16′ 4″	23′ 2″ i	20′ 8″ i	16′ 10″ i
1200S200-97	50	23′ 8″	21′ 6″	18′ 0″	25′ 6″ i	22′ 1″ i	18′ 0″ i	21′ 6″	19′ 6″	17′ 0″	24′ 1″ i	21′ 11″ i	18′ 0″ i
1200S250-97	50	24′ 7″	22′ 4″	18′ 7″ e	26′ 4″ i	22′ 9″ i	18′ 7″ i	22′ 4″	20′ 3″	17′ 8″	25′ 0″ i	22′ 9″ i	18′ 7″ i
1200S300-97	50	25′ 5″″	23′ 1″	19′ 0″ e	26′ 10″ i	23′ 3″ i	19′ 0″ i	23′ 1″	20′ 11″	18′ 4″ e	25′ 11″ i	23′ 3″ i	19′ 0″ i

"e" Requires web stiffeners at end supports
"i" Requires web stiffeners at interior supports
"a" Requires web stiffeners at all supports

Interior Bearing Length = 3.5″
End Bearing Length = 3.5″
Alternate Span Loading Considered
Studs considered unpunched for web crippling and shear

Allowable Floor Joist Spans 15 psf Dead Load and 125 psf Live Load

Section	Fy (Ksi)	L/360 Live Load Deflection						L/480 Live Load Deflection					
		Single Span Spacing (in)			Two Equal Spans Spacing (in)			Single Span Spacing (in)			Two Equal Spans Spacing (in)		
		12	16	24	12	16	24	12	16	24	12	16	24
600S162-33	33	6' 2" e	5' 4" e	3' 10" e	5' 6" a	4' 5" a	3' 1" a	6' 2" e	5' 4" e	3' 10" e	5' 6" a	4' 5" a	3' 1" a
600S200-33	33	6' 7" e	5' 8" e	3' 10" e	5' 7" a	4' 6" a	3' 1" a	6' 7" a	5' 8" e	3' 10" e	5' 7" a	4' 6" a	3' 1" a
600S162-43	33	7' 7" e	6' 7" e	5' 4" e	7' 7" a	6' 7" a	5' 4" a	7' 7" e	6' 7" e	5' 4" e	7' 7" a	6' 7" a	5' 4" a
600S200-43	33	7' 10" e	6' 9" e	5' 6" e	7' 10" a	6' 9" a	5' 5" a	7' 10" e	6' 9" e	5' 6" e	7' 10" a	6' 9" a	5' 6" a
600S250-43	33	8' 1" e	7' 0" e	5' 8" e	8' 1" a	7' 0" a	5' 6" a	8' 1" e	7' 0" e	5' 8" e	8' 1" a	7' 0" a	5' 6" a
600S162-54	50	10' 0"	8' 10" e	7' 2" e	10' 2" i	8' 10" i	7' 2" i	9' 1"	8' 3"	7' 2" e	10' 2" i	8' 10" i	7' 2" i
600S200-54	50	10' 6"	9' 1" e	7' 5" e	10' 6" i	9' 1" i	7' 5" a	9' 6"	8' 8" e	7' 5" e	10' 6" i	9' 1" i	7' 5" a
600S250-54	50	10' 9"	9' 3" e	7' 7" e	10' 9" i	9' 3" i	7' 7" a	9' 11"	9' 0" e	7' 7" e	10' 9" i	9' 3" i	7' 7" a
600S300-54	50	10' 11"	9' 5" e	7' 8" e	10' 11" i	9' 5" i	7' 8" a	10' 2"	9' 3" e	7' 8" e	10' 11" i	9' 5" i	7' 8" a
600S162-68	50	10' 8"	9' 8"	8' 5" e	12' 0" i	10' 4" i	8' 5" i	9' 8"	8' 10"	7' 8"	10' 11" i	9' 11" i	8' 5" i
600S200-68	50	11' 3"	10' 2"	8' 11" e	12" 7" i	10' 11" i	8' 11" i	10' 2"	9' 3"	8' 1"	11' 6" i	10' 5" i	8' 11" i
600S250-68	50	11' 9"	10' 8"	8' 10" e	12" 6" i	10' 10" i	8' 10" i	10' 8"	9' 9"	8' 6" e	12' 0" i	10' 10" i	8' 10" i
600S300-68	50	12' 2"	11' 0"	9' 0" e	12' 9" i	11' 0" i	9' 0" i	11' 1"	10' 1"	8' 9" e	12' 5" i	11' 0" i	9' 0" i
600S162-97	50	11' 10"	10' 9"	9' 5"	13' 4"	12' 1" i	10' 7" i	10' 9"	9' 9"	8' 6"	12' 1"	11' 0"	9' 7" i
600S200-97	50	12' 6"	11' 4"	9' 11"	14' 0"	12' 9" i	11' 1" i	11' 4"	10' 4"	9' 0"	12' 9"	11' 7"	10' 1" i
600S250-97	50	13' 1"	11' 11"	10' 5"	14' 9" i	13' 4" i	11' 7" i	11' 11"	10' 10"	9' 5"	13' 4"	12' 2" i	10' 7" i
600S300-97	50	13' 8"	12' 5"	10' 10"	15' 4" i	13' 11" i	11' 5" i	12' 5"	11' 3"	9' 10"	13' 11"	12' 8" i	11' 0" i
800S162-33	33	5' 8" e	4' 3" e	2' 10" e	4' 7" a	3' 5" a	2' 3" a	5' 8" e	4' 3" e	2' 10" e	4' 7" a	3' 5" a	2' 3" a
800S200-33	33	5' 8" e	4' 3" e	2' 10" e	4' 7" a	3' 5" a	2' 3" a	5' 8" e	4' 3" e	2' 10" e	4' 7" a	3' 5" a	2' 3" a
800S162-43	33	8' 7" e	7' 5" e	6' 1" e	8' 2" a	6' 7" a	4' 10" a	8' 7" e	7' 5" e	6' 1" e	8' 2" a	6' 7" a	4' 10" a
800S200-43	33	9' 2" e	7' 11" e	6' 4" e	8' 8" a	7' 0" a	5' 1" a	9' 2" e	7' 11" e	6' 4" e	8' 8" a	7' 0" a	5' 1" a
800S250-43	33	9' 5" e	8' 2" e	6' 4" e	8' 9" a	7' 0" a	5' 1" a	9' 5" e	8' 2" e	6' 4" e	8' 9" a	7' 0" a	5' 1" a
800S162-54	50	11' 6" e	9' 11" e	8' 1" e	11' 6" i	9' 11" i	7' 11" a	11' 4" e	9' 11" e	8' 1" e	11' 6" i	9' 11" i	7' 11" a
800S200-54	50	12' 3"e	10' 7" e	8' 8" e	12' 3"i	10' 7" a	8' 5" a	11' 11" e	10' 7" e	8' 8" e	12' 3" i	10' 7" a	8' 5" a
800S250-54	50	12' 6" e	10' 10" e	8' 10" e	12' 6" i	10' 10" a	8' 5" a	12' 6" e	10' 10" e	8' 10" e	12' 6" i	10' 10 "a	8' 5" a
800S300-54	50	12' 8" e	11' 0" e	9' 0" e	12' 8" i	11' 0" a	8' 5" a	12' 8" e	11' 0" e	9' 0" e	12' 8" i	11' 0" a	8' 5" a
800S162-68	50	13' 6"	11' 8"	9' 6" e	13' 6" i	11' 8" i	9' 6" i	12' 3"	11' 2"	9' 6" e	13' 6" i	11' 8" i	9' 6" i
800S200-68	50	14' 2"	12' 10" e	10' 6" e	14' 10" i	12' 10" i	10' 6" i	12' 10"	11' 8"	10' 2" e	14' 5" i	12' 10" i	10' 6" i
800S250-68	50	14' 8"	12' 9" e	10' 5" e	14' 8" i	12' 9" i	10' 5" i	13' 5"	12' 2" e	10' 5" e	14' 8" i	12' 9" i	10' 5" i
800S300-68	50	14' 11"	12' 11" e	10' 7" e	14' 11" i	12' 11" i	10' 7" i	13' 10"	12' 7" e	10' 7" e	14' 11" i	12' 11" i	10' 7" i
800S162-97	50	15' 0"	13' 7"	11' 11"	16' 10" i	14' 9" i	12' 0" i	13' 7"	12' 4"	10' 10"	15' 3" i	13' 11" i	12' 0' i
800S200-97	50	15' 9"	14' 3"	12' 6"	17' 8" i	16' 0" i	13' 5" i	14' 3"	13' 0"	11' 4"	16' 0"	14' 7" i	12' 9" i
800S250-97	50	16' 5"	14' 11"	13' 0"	18' 5" i	16' 9" i	13' 8" i	14' 11"	13' 7"	11' 10"	16' 9" i	15' 3" i	13' 4" i
800S300-97	50	17' 1"	15' 6"	13' 5"	19' 0" i	16' 6" i	13' 5" i	15' 6"	14' 1"	12' 3"	17' 5" i	15' 10" i	13' 5" i
1000S162-43	33	9' 6" e	7' 7" e	5' 0" e	7' 8" a	6' 0" a	4' 0" a	9' 6" e	7' 7" e	5' 0" e	7' 8" a	6' 0" a	4' 0" a
1000S200-43	33	10' 1" e	7' 7" e	5' 0" e	7' 11" a	6' 0" a	4' 0" a	10' 1" e	7' 7" e	5' 0" e	7' 11" a	6' 0" a	4' 0" a
1000S250-43	33	10' 1" e	7' 7" e	5' 0" e	8' 0" a	6' 0" a	4' 0" a	10' 1" e	7' 7" e	5' 0" e	8' 0" a	6' 0" a	4' 0" a
1000S162-54	50	12' 9" e	11' 0" e	9' 0" e	12' 8" i	10' 3" a	7' 6" a	12' 9" e	11' 0" e	9' 0" e	12' 8" i	10' 3" a	7' 6" a
1000S200-54	50	13' 8" e	11' 10" e	9' 8" e	13' 0" i	10' 6" a	7' 8" a	13' 8" e	11' 10" e	9' 8" e	13' 0" i	10' 6" a	7' 8" a
1000S250-54	50	14' 1" e	12' 2" e	9' 11" e	13' 4" i	10' 9" a	7' 10" a	14' 1" e	12' 2" e	9' 11" e	13' 4" i	10' 9" a	7' 10" a
1000S300-54	50	14' 3" e	12' 4" e	10' 0" e	13' 4" i	10' 9" a	7' 10" a	14' 3" e	12' 4" e	10' 0" e	13' 4 "i	10' 9" a	7' 10" a
1000S162-68	50	15' 1"	13' 0" e	10' 8" e	15' 1" i	13' 0" i	10' 8" a	14' 8"	13' 0" e	10' 8 "e	15' 1" i	13' 0" i	10" 8" a
1000S200-68	50	16' 1" e	13' 11" e	11' 4" e	16' 1" i	13' 11" i	11' 4" a	15' 4"	13' 11" e	11' 4" e	16'1" i	13' 11"i	11' 4" a
1000S250-68	50	16' 7" e	14' 4" e	11' 8" e	16' 7" i	14' 4" i	11' 8" a	16' 0" e	14' 4" e	11' 8" e	16' 7" i	14' 4" i	11' 8" a
1000S300-68	50	16' 10" e	14' 7" e	11' 11" e	16' 10" i	14' 7" i	11' 11" a	16' 6" e	14' 7" e	11' 11" e	16' 10"i	14' 7" i	11' 11" a
1000S162-97	50	18' 1"	16' 5"	13' 8"	19' 4" i	16' 8" i	13' 8" i	16' 5"	14' 11"	13' 0"	18' 5" i	16' 8" i	13' 8" i
1000S200-97	50	18' 10"	17' 2"	14' 6"	20' 6" i	17' 9" i	14' 6" i	17' 2"	15' 7"	13' 7"	19' 3" i	17' 6" i	14' 6" i
1000S250-97	50	19' 8"	17' 10"	15' 6" e	22' 0" i	19' 0" i	15' 6" i	17' 10"	16' 3"	14' 2"	20' 1" i	18' 2" i	15' 6" i
1000S300-97	50	20' 4"	18' 6"	15' 3" e	21' 7" i	18' 8" i	15' 3" i	18' 6"	16' 10"	14' 8" e	20' 9" i	18' 8" i	15' 3" i
1200S162-54	50	13' 8" e	11' 10" e	8' 4" e	12' 2" a	9' 8" a	6' 8" a	13' 8" e	11' 10" e	8' 4" e	12' 2" a	9' 8" a	6' 8" a
1200S200-54	50	14' 10" e	12' 6" e	8' 4" e	12' 5" a	9' 10" a	6' 8" a	14' 10" e	12' 6" e	8' 4" e	12' 5" a	9' 10" a	6' 8" a
1200S250-54	50	15' 4" e	12' 6" e	8' 4" e	12' 6" a	9' 11" a	6' 8" a	15' 4" e	12' 6" e	8' 4" e	12' 6" a	9' 11" a	6' 8" a
1200S300-54	50	15' 7" e	12' 6" e	8' 4" e	12' 8" a	10' 0" a	6' 8" a	15' 7" a	12' 6" e	8' 4" e	12' 8" a	10' 0" a	6' 8" a
1200S162-68	50	16' 4" e	14' 1" e	11' 6" e	16' 4" i	14' 1" i	11' 2" a	16' 4" e	14' 1" e	11' 6" e	16' 4" i	14' 1" i	11' 2'' a
1200S200-68	50	17' 7" e	15' 2" e	12' 5" e	17' 7" i	15' 2" a	11' 6" a	17' 7" e	15' 2" e	12' 5" e	17' 7" i	15' 2" a	11' 6" a
1200S250-68	50	18' 1" e	15' 8" e	12' 10" e	18' 1" i	15' 6" a	11' 6" a	18' 1" e	15' 8" e	12' 10" e	18' 1" i	15' 6" a	11' 6" a
1200S300-68	50	18' 6" i	16' 0" e	13' 1" e	18' 6" i	15' 11" a	11' 10" a	18' 6" e	16' 0" e	13' 1" e	18' 6" i	15' 11" a	11' 10" a
1200S162-97	50	21' 1"	18' 4"	14' 11" e	21' 2" i	18' 4" i	14' 11" i	19' 2"	17' 5"	14' 11" e	21' 2" i	18' 4" i	14' 11" i
1200S200-97	50	21' 11"	19' 7"	16' 0" e	22' 7" i	19' 7" i	16' 0" i	19' 11"	18' 1"	15' 10" e	22' 4" i	19' 7" i	16' 0" i
1200S250-97	50	22' 9"	20' 3"	16' 6" e	23' 4" i	20' 3" i	16' 6" i	20' 8"	18' 10"	16' 5" e	23' 3" i	20' 3" i	16' 6" i
1200S300-97	50	23' 7"	20' 8"	16' 10" e	23' 10" i	20' 8" i	16' 10" i	21' 5"	19' 5"	16' 10" e	23' 10" i	20' 8" i	16' 10" i

"e" Requires web stiffeners at end supports
"i" Requires web stiffeners at interior supports
"a" Requires web stiffeners at all supports

Interior Bearing Length = 3.5"
End Bearing Length = 3.5"
Alternate Span Loading Considered
Studs considered unpunched for web crippling and shear

Allowable Floor Joist Spans 40 psf Dead Load and 125 psf Live Load

Section	Fy (Ksi)	L/360 Live Load Deflection						L/480 Live Load Deflection					
		Single Span Spacing (in)			Two Equal Spans Spacing (in)			Single Span Spacing (in)			Two Equal Spans Spacing (in)		
		12	16	24	12	16	24	12	16	24	12	16	24
600S162-33	33	6' 2" e	5' 4" e	3' 10" e	5' 6" a	4' 5" a	3' 1" a	6' 2" e	5' 4" e	3' 10" e	5' 6" a	4' 5" a	3' 1" a
600S200-33	33	6' 7" e	5' 8" e	3' 10" e	5' 7" a	4' 6" a	3' 1" a	6' 7" a	5' 8" e	3' 10" e	5' 7" a	4' 6" a	3' 1" a
600S162-43	33	7' 7" e	6' 7" e	5' 4" e	7' 7" a	6' 7" a	5' 4" a	7' 7" e	6' 7" e	5' 4" e	7' 7" a	6' 7" a	5' 4" a
600S200-43	33	7' 10" e	6' 9" e	5' 6" e	7' 10" a	6' 9" a	5' 5" a	7' 10" e	6' 9" e	5' 6" e	7' 10" a	6' 9" a	5' 6" a
600S250-43	33	8' 1" e	7' 0" e	5' 8" e	8' 1" a	7' 0" a	5' 6" a	8' 1" e	7' 0" e	5' 8" e	8' 1" a	7' 0" a	5' 6" a
600S162-54	50	10' 0"	8' 10" e	7' 2" e	10' 2" i	8' 10" i	7' 2" i	9' 1"	8' 3"	7' 2" e	10' 2" i	8' 10" i	7' 2" i
600S200-54	50	10' 6"	9' 1" e	7' 5" e	10' 6" i	9' 1" i	7' 5" a	9' 6"	8' 8" e	7' 5" e	10' 6" i	9' 1" i	7' 5" a
600S250-54	50	10' 9"	9' 3" e	7' 7" e	10' 9" i	9' 3" i	7' 7" a	9' 11"	9' 0" e	7' 7" e	10' 9" i	9' 3" i	7' 7" a
600S300-54	50	10' 11"	9' 5" e	7' 8" e	10' 11" i	9' 5" i	7' 8" a	10' 2"	9' 3" e	7' 8" e	10' 11" i	9' 5" i	7' 8" a
600S162-68	50	10' 8"	9' 8"	8' 5" e	12' 0" i	10' 4" i	8' 5" i	9' 8"	8' 10"	7' 8"	10' 11" i	9' 11" i	8' 5" i
600S200-68	50	11' 3"	10' 2"	8' 11" e	12" 7" i	10' 11" i	8' 11" i	10' 2"	9' 3"	8' 1"	11' 6" i	10' 5" i	8' 11" i
600S250-68	50	11' 9"	10' 8"	8' 10" e	12" 6" i	10' 10" i	8' 10" i	10' 8"	9' 9"	8' 6" e	12' 0" i	10' 10" i	8' 10" i
600S300-68	50	12' 2"	11' 0"	9' 0" e	12' 9" i	11' 0" i	9' 0" i	11' 1"	10' 1"	8' 9" e	12' 5" i	11' 0" i	9' 0" i
600S162-97	50	11' 10"	10' 9"	9' 5"	13' 4"	12' 1" i	10' 7" i	10' 9"	9' 9"	8' 6"	12' 1"	11' 0"	9' 7" i
600S200-97	50	12' 6"	11' 4"	9' 11"	14' 0"	12' 9" i	11' 1" i	11' 4"	10' 4"	9' 0"	12' 9"	11' 7"	10' 1" i
600S250-97	50	13' 1"	11' 11"	10' 5"	14' 9" i	13' 4" i	11' 7" i	11' 11"	10' 10"	9' 5"	13' 4"	12' 2" i	10' 7" i
600S300-97	50	13' 8"	12' 5"	10' 10"	15' 4" i	13' 11" i	11' 5" i	12' 5"	11' 3"	9' 10"	13' 11"	12' 8" i	11' 0" i
800S162-33	33	5' 8" e	4' 3" e	2' 10" e	4' 7" a	3' 5" a	2' 3" a	5' 8" e	4' 3" e	2' 10" e	4' 7" a	3' 5" a	2' 3" a
800S200-33	33	5' 8" e	4' 3" e	2' 10" e	4' 7" a	3' 5" a	2' 3" a	5' 8" e	4' 3" e	2' 10" e	4' 7" a	3' 5" a	2' 3" a
800S162-43	33	8' 7" e	7' 5" e	6' 1" e	8' 2" a	6' 7" a	4' 10" a	8' 7" e	7' 5" e	6' 1" e	8' 2" a	6' 7" a	4' 10" a
800S200-43	33	9' 2" e	7' 11" e	6' 4" e	8' 8" a	7' 0" a	5' 1" a	9' 2" e	7' 11" e	6' 4" e	8' 8" a	7' 0" a	5' 1" a
800S250-43	33	9' 5" e	8' 2" e	6' 4" e	8' 9" a	7' 0" a	5' 1" a	9' 5" e	8' 2" e	6' 4" e	8' 9" a	7' 0" a	5' 1" a
800S162-54	50	11' 6" e	9' 11" e	8' 1" e	11' 6" i	9' 11" i	7' 11" a	11' 4" e	9' 11" e	8' 1" e	11' 6" i	9' 11" i	7' 11" a
800S200-54	50	12' 3"e	10' 7" e	8' 8" e	12' 3"i	10' 7" a	8' 5" a	11' 11" e	10' 7" e	8' 8" e	12' 3" i	10' 7" a	8' 5" a
800S250-54	50	12' 6" e	10' 10" e	8' 10" e	12' 6" i	10' 10" a	8' 5" a	12' 6" e	10' 10" e	8' 10" e	12' 6" i	10' 10 "a	8' 5" a
800S300-54	50	12' 8" e	11' 0" e	9' 0" e	12' 8" i	11' 0" a	8' 5" a	12' 8" e	11' 0" e	9' 0" e	12' 8" i	11' 0" a	8' 5" a
800S162-68	50	13' 6"	11' 8"	9' 6" e	13' 6" i	11' 8" i	9' 6" i	12' 3"	11' 2"	9' 6" e	13' 6" i	11' 8" i	9' 6" i
800S200-68	50	14' 2"	12' 10" e	10' 6" e	14' 10" i	12' 10" i	10' 6" i	12' 10"	11' 8"	10' 2" e	14' 5" i	12' 10" i	10' 6" i
800S250-68	50	14' 8"	12' 9" e	10' 5" e	14' 8" i	12' 9" i	10' 5" i	13' 5"	12' 2" e	10' 5" e	14' 8" i	12' 9" i	10' 5" i
800S300-68	50	14' 11"	12' 11" e	10' 7" e	14' 11" i	12' 11" i	10' 7" i	13' 10"	12' 7" e	10' 7" e	14' 11" i	12' 11" i	10' 7" i
800S162-97	50	15' 0"	13' 7"	11' 11"	16' 10" i	14' 9" i	12' 0" i	13' 7"	12' 4"	10' 10"	15' 3" i	13' 11" i	12' 0' i
800S200-97	50	15' 9"	14' 3"	12' 6"	17' 8" i	16' 0" i	13' 5" i	14' 3"	13' 0"	11' 4"	16' 0"	14' 7" i	12' 9" i
800S250-97	50	16' 5"	14' 11"	13' 0"	18' 5" i	16' 9" i	13' 8" i	14' 11"	13' 7"	11' 10"	16' 9" i	15' 3" i	13' 4" i
800S300-97	50	17' 1"	15' 6"	13' 5"	19' 0" i	16' 6" i	13' 5" i	15' 6"	14' 1"	12' 3"	17' 5" i	15' 10" i	13' 5" i
1000S162-43	33	9' 6" e	7' 7" e	5' 0" e	7' 8" a	6' 0" a	4' 0" a	9' 6" e	7' 7" e	5' 0" e	7' 8" a	6' 0" a	4' 0" a
1000S200-43	33	10' 1" e	7' 7" e	5' 0" e	7' 11" a	6' 0" a	4' 0" a	10' 1" e	7' 7" e	5' 0" e	7' 11" a	6' 0" a	4' 0" a
1000S250-43	33	10' 1" e	7' 7" e	5' 0" e	8' 0" a	6' 0" a	4' 0" a	10' 1" e	7' 7" e	5' 0" e	8' 0" a	6' 0" a	4' 0" a
1000S162-54	50	12' 9" e	11' 0" e	9' 0" e	12' 8" i	10' 3" a	7' 6" a	12' 9" e	11' 0" e	9' 0" e	12' 8" i	10' 3" a	7' 6" a
1000S200-54	50	13' 8" e	11' 10" e	9' 8" e	13' 0" i	10' 6" a	7' 8" a	13' 8" e	11' 10" e	9' 8" e	13' 0" i	10' 6" a	7' 8" a
1000S250-54	50	14' 1" e	12' 2" e	9' 11" e	13' 4" i	10' 9" a	7' 10" a	14' 1" e	12' 2" e	9' 11" e	13' 4" i	10' 9" a	7' 10" a
1000S300-54	50	14' 3" e	12' 4" e	10' 0" e	13' 4" i	10' 9" a	7' 10" a	14' 3" e	12' 4" e	10' 0" e	13' 4 "i	10' 9" a	7' 10" a
1000S162-68	50	15' 1"	13' 0" e	10' 8" e	15' 1" i	13' 0" i	10' 8" a	14' 8"	13' 0" e	10' 8 "e	15' 1" i	13' 0" i	10" 8" a
1000S200-68	50	16' 1" e	13' 11" e	11' 4" e	16' 1" i	13' 11" i	11' 4" a	15' 4"	13' 11" e	11' 4" e	16'1" i	13' 11"i	11' 4" a
1000S250-68	50	16' 7" e	14' 4" e	11' 8" e	16' 7" i	14' 4" i	11' 8" a	16' 0" e	14' 4" e	11' 8" e	16' 7" i	14' 4" i	11' 8" a
1000S300-68	50	16' 10" e	14' 7" e	11' 11" e	16' 10" i	14' 7" i	11' 11" a	16' 6" e	14' 7" e	11' 11" e	16' 10"i	14' 7" i	11' 11" a
1000S162-97	50	18' 1"	16' 5"	13' 8"	19' 4" i	16' 8" i	13' 8" i	16' 5"	14' 11"	13' 0"	18' 5" i	16' 8" i	13' 8" i
1000S200-97	50	18' 10"	17' 2"	14' 6"	20' 6" i	17' 9" i	14' 6" i	17' 2"	15' 7"	13' 7"	19' 3" i	17' 6" i	14' 6" i
1000S250-97	50	19' 8"	17' 10"	15' 6" e	22' 0" i	19' 0" i	15' 6" i	17' 10"	16' 3"	14' 2"	20' 1" i	18' 2" i	15' 6" i
1000S300-97	50	20' 4"	18' 6"	15' 3" e	21' 7" i	18' 8" i	15' 3" i	18' 6"	16' 10"	14' 8" e	20' 9" i	18' 8" i	15' 3" i
1200S162-54	50	13' 8" e	11' 10" e	8' 4" e	12' 2" a	9' 8" a	6' 8" a	13' 8" e	11' 10" e	8' 4" e	12' 2" a	9' 8" a	6' 8" a
1200S200-54	50	14' 10" e	12' 6" e	8' 4" e	12' 5" a	9' 10" a	6' 8" a	14' 10" e	12' 6" e	8' 4" e	12' 5" a	9' 10" a	6' 8" a
1200S250-54	50	15' 4" e	12' 6" e	8' 4" e	12' 6" a	9' 11" a	6' 8" a	15' 4" e	12' 6" e	8' 4" e	12' 6" a	9' 11" a	6' 8" a
1200S300-54	50	15' 7" e	12' 6" e	8' 4" e	12' 8" a	10' 0" a	6' 8" a	15' 7" a	12' 6" e	8' 4" e	12' 8" a	10' 0" a	6' 8" a
1200S162-68	50	16' 4" e	14' 1" e	11' 6" e	16' 4" i	14' 1" i	11' 2" a	16' 4" e	14' 1" e	11' 6" e	16' 4" i	14' 1" i	11' 2'' a
1200S200-68	50	17' 7" e	15' 2" e	12' 5" e	17' 7" i	15' 2" a	11' 6" a	17' 7" e	15' 2" e	12' 5" e	17' 7" i	15' 2" a	11' 6" a
1200S250-68	50	18' 1" e	15' 8" e	12' 10" e	18' 1" i	15' 6" a	11' 6" a	18' 1" e	15' 8" e	12' 10" e	18' 1" i	15' 6" a	11' 6" a
1200S300-68	50	18' 6" i	16' 0" e	13' 1" e	18' 6" i	15' 11" a	11' 10" a	18' 6" e	16' 0" e	13' 1" e	18' 6" i	15' 11" a	11' 10" a
1200S162-97	50	21' 1"	18' 4"	14' 11" e	21' 2" i	18' 4" i	14' 11" i	19' 2"	17' 5"	14' 11" e	21' 2" i	18' 4" i	14' 11" i
1200S200-97	50	21' 11"	19' 7"	16' 0" e	22' 7" i	19' 7" i	16' 0" i	19' 11"	18' 1"	15' 10" e	22' 4" i	19' 7" i	16' 0" i
1200S250-97	50	22' 9"	20' 3"	16' 6" e	23' 4" i	20' 3" i	16' 6" i	20' 8"	18' 10"	16' 5" e	23' 3" i	20' 3" i	16' 6" i
1200S300-97	50	23' 7"	20' 8"	16' 10" e	23' 10" i	20' 8" i	16' 10" i	21' 5"	19' 5"	16' 10" e	23' 10" i	20' 8" i	16' 10" i

"e" Requires web stiffeners at end supports
"i" Requires web stiffeners at interior supports
"a" Requires web stiffeners at all supports

Interior Bearing Length = 3.5"
End Bearing Length = 3.5"
Alternate Span Loading Considered
Studs considered unpunched for web crippling and shear

CEMCO™
Steel Framing and Metal Lath

Web Crippling Table Notes

1. Listed allowable loads apply only to members with stiffened flanges (i.e. S-sections).
2. For back-to-back members, the listed loads are for the entire two-member assembly.
3. Listed allowable loads are based on members “fastened to supports”.
4. For back-to-back members, the distance between the web connectors and the flange shall be kept to a minimum.
5. For listed punchout reductions factors, Rc, x is the nearest distance between the web hole and edge of bearing in inches.
6. Listed allowable loads are for unpunched webs. Capacity reductions for end and interior one flange loading (Conditions 1 & 2) near punchouts are listed per AISI S100 Section C3.4.2.
7. “h” refers to the flat dimension of the web. See web-to-depth Thickness Ratio table in this catalog.

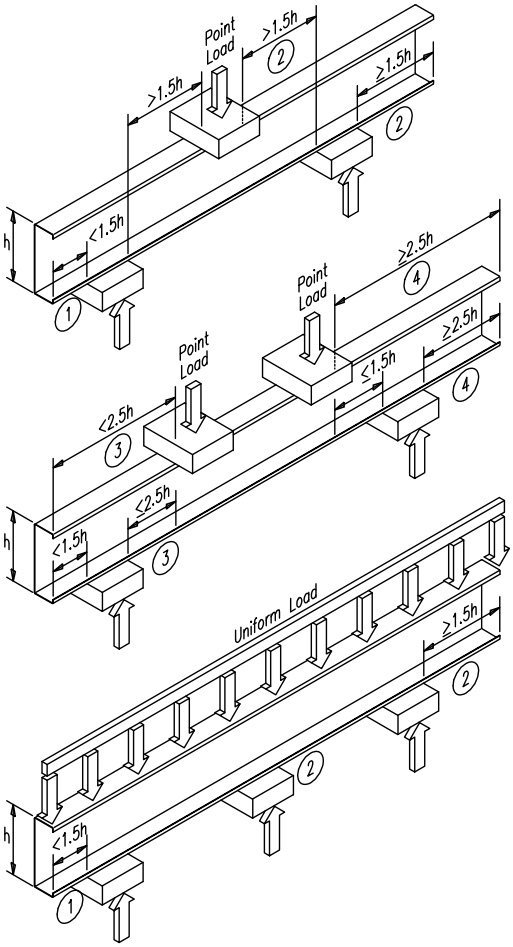

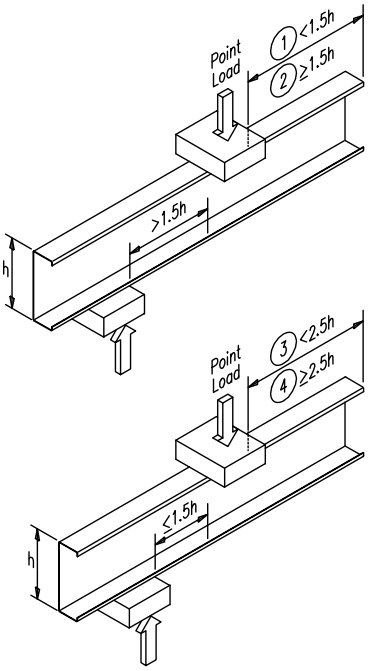

Notes

1. Condition 1 - End Reaction - One Flange Loading
2 Condition 2 - Interior Reaction - One Flange Loading
3 Condition 3 - End Reaction - Two Flange Loading
4. Condition 4 - Interior Reaction - Two Flange Loading

CEMCO™
Steel Framing and Metal Lath

Allowable Web Crippling Loads - Single Members

Stud Designation	Design Thickness	Fy(Ksi)	Condition 1 (E1F)				Condition 2 (I1F)				Condition 3 (E2F)				Condition 4 (I2F)			
			Bearing Length (in)				Bearing Length (in)				Bearing Length (in)				Bearing Length (in)			
			1	3.5	4	6	1	3.5	4	6	1	3.5	4	6	1	3.5	4	6
162 S__-33	0.0346	33	180	282	297	350[1]	336	462[1]	48[11]	545[1]	170	229[1]	237[1]	267[1]	441	557[1]	574[1]	634[1]
250 S__-33	0.0346	33	173	271	285	336[1]	330	453	472	535[1]	150	201	209	235[1]	411	519	535	591[1]
250 S__-43	0.0451	33	287	443	466	547[1]	580	780	810	913[1]	267	351	364	407[1]	720	892	918	1006[1]
250 S__-54	0.0566	33	433	657	690	806[1]	891	1178	1221	1369[1]	430	556	574	639[1]	1142	1392	1429	1558[1]
250 S__-54	0.0566	50	656	996	1046	1222[1]	1350	1785	1850	2075[1]	652	842	870	968[1]	1730	2109	2165	2361[1]
250 S__-68	0.0713	33	654	977	1024	1191[1]	1368	1778	1838	2050[1]	693	880	907	1004[1]	1815	2179	2233	2421[1]
250 S__-68	0.0713	50	990	1480	1552	1805[1]	2073	2693	2785	3106[1]	1049	1333	1375	1521[1]	2750	3302	3384	3669[1]
250 S__-97	0.1017	33	1236	1799	1882	2173[1]	2657	3362	3467[1]	3831[1]	1430	1771	1821	1997[1]	3694	4340	4435	4768[1]
250 S__-97	0.1017	50	1872	2726	2852	3293[1]	4025	5095	5253[1]	5805[1]	2167	2683	2759	3026[1]	5597	6575	6720	7225[1]
350 S__-33	0.0346	33	166	260	274	323	324	445	463	526	131	175	182	205	384	484	499	551
350 S__-43	0.0451	33	278	428	451	528	571	768	798	900	240	315	326	365	680	842	866	949
350 S__-54	0.0566	33	420	638	670	783	879	1162	1204	1351	392	507	524	583	1086	1324	1359	1482
350 S__-54	0.0566	50	637	967	1016	1186	1331	1761	1825	2046	594	768	794	883	1645	2005	2059	2245
350 S__-68	0.0713	33	637	951	998	1160	1351	1756	1816	2025	640	813	839	928	1736	2085	2137	2317
350 S__-68	0.0713	50	965	1441	1512	1758	2047	2660	2751	3068	970	1232	1271	1406	2631	3159	3238	3510
350 S__-97	0.1017	33	1209	1759	1841	2125[1]	2629	3327	3431	3791[1]	1343	1663	1710	1876[1]	3562	4184	4276	4597[1]
350 S__-97	0.1017	50	1831	2666	2790	3220[1]	3983	5041	5198	5745[1]	2035	2520	2592	2842[1]	5397	6339	6479	6965[1]
362 S__-33	0.0346	33	165	259	273	322	323	444	462	525	129	173	179	202	381	480	495	547
362 S__-43	0.0451	33	277	427	449	526	570	767	796	898	236	311	322	360	675	836	860	943
362 S__-54	0.0566	33	419	636	668	780	877	1160	1202	1348	388	501	518	577	1079	1316	1351	1473
362 S__-54	0.0566	50	634	963	1012	1182	1329	1758	1822	2043	588	760	785	874	1635	1994	2047	2232
362 S__-68	0.0713	33	635	948	995	1157	1349	1753	1813	2022	635	806	831	920	1728	2074	2126	2305
362 S__-68	0.0713	50	962	1437	1507	1752	2044	2657	2747	3064	961	1221	1259	1393	2618	3143	3221	3492
362 S__-97	0.1017	33	1206	1755	1837	2120	2626	3323	3427	3787	1333	1651	1698	1862	3547	4166	4258	4578
362 S__-97	0.1017	50	1827	2659	2783	3212	3978	5035	5192	5738	2020	2501	2573	2821	5374	6313	6452	6936
400 S__-33	0.0346	33	163	256	269	317	322	442	460	522	122	164	170	192	372	469	483	534
400 S__-43	0.0451	33	274	422	444	520	567	763	792	893	227	299	309	346	662	819	843	924
400 S__-54	0.0566	33	415	629	661	772	873	1155	1197	1342	376	485	502	558	1061	1293	1328	1448
400 S__-54	0.0566	50	628	954	1002	1170	1323	1750	1813	2034	569	735	760	846	1607	1960	2012	2194
400 S__-68	0.0713	33	629	940	986	1147	1344	1746	1806	2014	617	784	809	895	1702	2044	2094	2271
400 S__-68	0.0713	50	953	1424	1494	1737	2036	2646	2736	3051	936	1188	1226	1356	2579	3096	3173	3440
400 S__-97	0.1017	33	1197	1742	1823	2105	2617	3312	3415	3774	1305	1616	1662	1822	3504	4116	4207	4523
400 S__-97	0.1017	50	1814	2640	2762	3189	3965	5018	5174	5718	1978	2448	2518	2761	5309	6236	6374	6852
550 S__-33	0.0346	33	155	243	256	302	315	432	450	511	100	134	139	157	339	428	441	487
550 S__-43	0.0451	33	262	405	426	499	556	749	778	877	195	256	265	297	614	760	782	858
550 S__-54	0.0566	33	400	607	638	745	859	1136	1177	1320	331	428	443	493	995	1213	1246	1358
550 S__-54	0.0566	50	606	920	966	1128	1302	1722	1784	2001	502	649	671	746	1508	1838	1887	2058
550 S__-68	0.0713	33	609	910	955	1111	1324	1721	1780	1985	557	707	729	807	1611	1934	1982	2149
550 S__-68	0.0713	50	923	1380	1447	1683	2007	2608	2697	3007	844	1071	1105	1223	2441	2931	3003	3256
550 S__-97	0.1017	33	1166	1697	1776	2050	2585	3272	3373	3728	1205	1492	1535	1683	3352	3937	4024	4326
550 S__-97	0.1017	50	1766	2571	2691	3106	3917	4957	5111	5648	1826	2261	2325	2550	5078	5965	6097	6555
600 S__-33	0.0346	33	153	240	253	297	313	430	447	507	93	125	130	146	329	416	429	473
600 S__-43	0.0451	33	259	400	420	493	553	745	773	872	185	243	252	282	600	743	764	838
600 S__-54	0.0566	33	395	600	631	736	855	1131	1172	1314	318	411	425	473	975	1189	1221	1331
600 S__-54	0.0566	50	599	909	956	1116	1295	1713	1775	1991	482	623	644	716	1478	1802	1850	2017
600 S__-68	0.0713	33	604	902	946	1100	1318	1713	1772	1976	539	684	706	781	1583	1901	1949	2113
600 S__-68	0.0713	50	914	1366	1433	1666	1998	2596	2685	2994	816	1036	1069	1183	2399	2881	2952	3201
600 S__-97	0.1017	33	1157	1684	1762	2034	2575	3260	3361	3714	1175	1455	1497	1641	3306	3884	3969	4267
600 S__-97	0.1017	50	1752	2551	2669	3081	3902	4939	5093	5628	1781	2205	2268	2487	5010	5885	6014	6466
800 S__-43	0.0451	33	247	381	401	470	542	730	757	854	150	197	204	228	548	678	698	765
800 S__-54	0.0566	33	379	576	605	706	839	1110	1150	1290	270	349	361	402	904	1102	1131	1234
800 S__-54	0.0566	50	575	872	917	1070	1272	1682	1743	1955	409	529	547	608	1370	1670	1714	1869
800 S__-68	0.0713	33	582	870	912	1061	1297	1686	1744	1944	473	600	619	685	1485	1783	1827	1981
800 S__-68	0.0713	50	882	1318	1382	1607	1966	2555	2642	2946	716	910	939	1038	2250	2701	2768	3001
800 S__-97	0.1017	33	1123	1635	1711	1975	2541	3216	3316	3665	1068	1322	1360	1491	3142	3691	3773	4056
800 S__-97	0.1017	50	1702	2477	2592	2992	3850	4873	5025	5553	1618	2003	2060	2259	4761	5593	5716	6145
1000 S__-54	0.0566	33	365	554	582	680	826	1092	1132	1269	228	295	305	339	841	1026	1053	1148
1000 S__-54	0.0566	50	553	840	882	1031	1251	1655	1715	1923	346	447	462	514	1275	1554	1595	1740
1000 S__-68	0.0713	33	563	842	883	1027	1279	1662	1719	1917	415	527	544	602	1398	1679	1721	1865
1000 S__-68	0.0713	50	854	1275	1338	1555	1938	2518	2604	2904	629	799	824	912	2119	2544	2607	2826
1000 S__-97	0.1017	33	1094	1592	1666	1923	2511	3178	3277	3622	974	1206	1240	1360	2999	3523	3601	3871
1000 S__-97	0.1017	50	1657	2412	2525	2914	3805	4815	4965	5487	1476	1827	1879	2060	4545	5338	5456	5866
1200 S__-68	0.0713	33	547	816	857	996	1262	1640	1696	1892	363	462	476	527	1320	1585	1625	1762
1200 S__-68	0.0713	50	828	1237	1298	1509	1913	2485	2570	2866	551	699	721	798	2001	2402	2462	2669
1200 S__-97	0.1017	33	1068	1554	1626	1877	2484	3144	3242	3583	889	1101	1133	1242	2871	3372	3446	3705
1200 S__-97	0.1017	50	1618	2355	2464	2844	3764	4764	4912	5428	1348	1668	1716	1882	4350	5109	5222	5614

Allowable Ceiling Spans Deflection Notes

1. For unbraced sections, allowable moment based on AISI S100 section C3.1.2 with unbraced length = listed span. For mid-span braced sections, allowable moment based on AISI S100 section C3.1.2 with unbraced length = (listed span)/2.
2. For spans listed with "e", web stiffeners are required at end reactions.
3. Web crippling calculation based on bearing length = 1 inch.
4. Web crippling and shear capacity have not been reduced for punch-outs. If web punch-outs occur near supports, members must be checked for reduced shear and web crippling in accordance with the AISI S100.
5. Values are for simple span conditions.
6. Stud distortional buckling is based on an assumed $K\phi = 0$.

Allowable Ceiling Spans Deflection Limit L/240

Section	Fy(Ksi)	4 psf Lateral Support of Compression Flange						6psf Lateral Support of Compression Flange						13 psf* Lateral Support of Compression Flange					
		Unsupported			Midspan			Unsupported			Midspan			Unsupported			Midspan		
		Joist Spacing (in) o.c.			Joist Spacing (in) o.c.			Joist Spacing (in) o.c.			Joist Spacing (in) o.c.			Joist Spacing (in) o.c.			Joist Spacing (in) o.c.		
		12	16	24	12	16	24	12	16	24	12	16	24	12	16	24	12	16	24
250S137-33	33	11′ 9″	10′ 10″	9′ 9″	14′ 11″	13′ 6″	11′ 10″	10′ 6″	9′ 9″	8′ 8″	13′ 0″	11′ 10″	10′ 4″	8′ 6″	7′ 11″	7′ 1″	0′ 0″	9′ 1″	8′ 0″
250S137-43	33	13′ 2″	12′ 1″	10′ 9″	16′ 2″	14′ 8″	12′ 10″	11′ 8″	10′ 9″	9′ 7″	14′ 2″	12′ 10″	11′ 2″	9′ 4″	8′ 7″	7′ 8″	10′ 11″	9′ 11″	8′ 8″
250S162-33	33	13′ 5″	12′ 5″	11′ 1″	15′ 8″	14′ 2″	12′ 5″	12′ 0″	11′ 1″	10′ 0″	13′ 8″	12′ 5″	10′ 10″	9′ 9″	9′ 0″	8′ 0″	10′ 7″	9′ 7″	8′ 4″
250S162-43	33	14′ 11″	13′ 9″	12′ 3″	17′ 0″	15′ 5″	13′ 6″	13′ 3″	12′ 3″	10′ 11″	14′ 10″	13′ 6″	11′ 9″	10′ 8″	9′ 10″	8′ 9″	11′ 6″	10′ 5″	9′ 1″
350S137-33	33	12′ 9″	11′ 9″	10′ 6″	18′ 1″	16′ 9″	15′ 0″	11′ 5″	10′ 6″	9′ 5″	16′ 3″	15′ 0″	13′ 3″	9′ 3″	8′ 6″	7′ 8″	12′ 11″	11′ 9″	10′ 0″
350S137-43	33	14′ 1″	13′ 0″	11′ 7″	19′ 10″	18′ 4″	16′ 4″	12′ 7″	11′ 7″	10′ 4″	17′ 8″	16′ 4″	14′ 6″	10′ 1″	9′ 4″	8′ 4″	14′ 2″	12′ 10″	11′ 2″
350S162-33	33	14′ 6″	13′ 5″	12′ 0″	20′ 3″	18′ 5″	16′ 1″	13′ 0″	12′ 0″	10′ 9″	17′ 8″	16′ 1″	14′ 0″	10′ 6″	9′ 9″	8′ 9″	13′ 8″	12′ 5″	10′ 10″
350S162-43	33	16′ 0″	14′ 9″	13′ 2″	22′ 0″	20′ 0″	17′ 6″	14′ 3″	13′ 2″	11′ 9″	19′ 3″	17′ 6″	15′ 3″	11′ 6″	10′ 8″	9′ 6″	14′ 10″	13′ 6″	11′ 9″
362S137-33	33	12′ 10″	11′ 11″	10′ 7″	18′ 3″	16′ 11″	15′ 2″	11′ 6″	10′ 8″	9′ 6″	16′ 5″	15′ 2″	13′ 5″	9′ 4″	8′ 7″	7′ 9″	13′ 1″	11′ 10″	10′ 2″
362S137-43	33	14′ 3″	13′ 1″	11′ 8″	20′ 0″	18′ 6″	16′ 6″	12′ 8″	11′ 8″	10′ 5″	17′ 10″	16′ 6″	14′ 9″	10′ 2″	9′ 5″	8′ 5″	14′ 5″	13′ 1″	11′ 4″
362S162-33	33	14′ 8″	13′ 6″	12′ 1″	20′ 9″	18′ 11″	16′ 6″	13′ 1″	12′ 1″	10′ 10″	18′ 2″	16′ 6″	14′ 5″	10′ 8″	9′ 10″	8′ 10″	14′ 0″	12′ 9″	11′ 1″
362S162-43	33	16′ 1″	14′ 10″	13′ 3″	22′ 7″	20′ 7″	17′ 11″	14′ 4″	13′ 3″	11′ 10″	19′ 9″	17′ 11″	15′ 8″	11′ 7″	10′ 9″	9′ 7″	15′ 3″	13′ 10″	12′ 1″
400S137-33	33	13′ 2″	12′ 2″	10′ 11″	18′ 9″	17′ 4″	15′ 6″	11′ 9″	10′ 11″	9′ 9″	16′ 9″	15′ 6″	13′ 10″	9′ 7″	8′ 10″	7′ 11″	13′ 6″	12′ 4″	10′ 7″
400S137-43	33	14′ 7″	13′ 5″	12′ 0″	20′ 6″	18′ 11″	16′ 11″	13′ 0″	12′ 0″	10′ 8″	18′ 4″	16′ 11″	15′ 2″	10′ 5″	9′ 8″	8′ 8″	14′ 10″	13′ 7″	11′ 10″
400S162-33	33	15′ 0″	13′ 10″	12′ 5″	21′ 4″	19′ 10″	17′ 9″	13′ 5″	12′ 5″	11′ 2″	19′ 2″	17′ 9″	15′ 6″	10′ 11″	10′ 1″	9′ 1″	15′ 2″	13′ 9″	11′ 8″
400S162-43	33	16′ 6″	15′ 3″	13′ 7″	23′ 4″	21′ 7″	19′ 4″	14′ 9″	13′ 7″	12′ 2″	20′ 10″	19′ 4″	16′ 11″	11′ 11″	11′ 0″	9′ 10″	16′ 6″	14′ 11″	13′ 1″
550S137-33	33	14′ 6″	13′ 5″	12′ 0″	20′ 10″	19′ 4″	17′ 5″	13′ 0″	12′ 0″	10′ 10″	18′ 9″	17′ 5″	15′ 8″	10′ 7″	9′ 10″	8′ 10″	15′ 4″	14′ 3″	12′ 8″e
550S137-43	33	15′ 10″	14′ 7″	13′ 1″	22′ 6″	20′ 10″	18′ 9″	14′ 2″	13′ 1″	11′ 9″	20′ 2″	18′ 9″	16′ 10″	11′ 6″	10′ 7″	9′ 6″	16′ 6″	15′ 3″	13′ 8″
550S162-33	33	16′ 6″	15′ 3″	13′ 8″	23′ 9″	22′ 0″	19′ 10″	14′ 9″	13′ 8″	12′ 4″	21′ 4″	19′ 10″	17′ 11″	12′ 1″	11′ 3″	10′ 1″	17′ 6″	16′ 2″	14′ 2″e
550S162-43	33	17′ 11″	16′ 7″	14′ 10″	25′ 7″	23′ 9″	21′ 4″	16′ 1″	14′ 10″	13′ 4″	23′ 0″	21′ 4″	19′ 2″	13′ 0″	12′ 1″	10′ 10″	18′ 10″	17′ 5″	15′ 5″
600S137-33	33	14′ 10″	13′ 9″	12′ 4″	21′ 4″	19′ 10″	17′ 10″	13′ 4″	12′ 4″	11′ 1″	19′ 3″	17′ 10″	16′ 0″	10′ 11″	10′ 1″	9′ 1″	15′ 8″	14′ 5″	12′ 10″e
600S137-43	33	16′ 2″	14′ 11″	13′ 5″	23′ 1″	21′ 4″	19′ 2″	14′ 6″	13′ 5″	12′ 0″	20′ 9″	19′ 2″	17′ 3″	11′ 9″	10′ 10″	9′ 9″	16′ 11″	15′ 8″	14′ 1″
600S162-33	33	16′ 10″	15′ 8″	14′ 1″	24′ 4″	22′ 7″	20′ 4″	15′ 2″	14′ 1″	12′ 8″	21′ 11″	20′ 4″	18′ 4″	12′ 5″	11′ 6″	10′ 4″	18′ 0″	16′ 8″	14′ 9″ e
600S162-43	33	18′ 4″	17′ 0″	15′ 3″	26′ 3″	24′ 4″	21′ 10″	16′ 5″	15′ 3″	13′ 8″	23′ 7″	21′ 10″	19′ 8″	13′ 4″	12′ 5″	11′ 2″	19′ 3″	17′ 11″	16′ 0″

* Loads that exceed 10 psf limit require an approved CP60 coating.

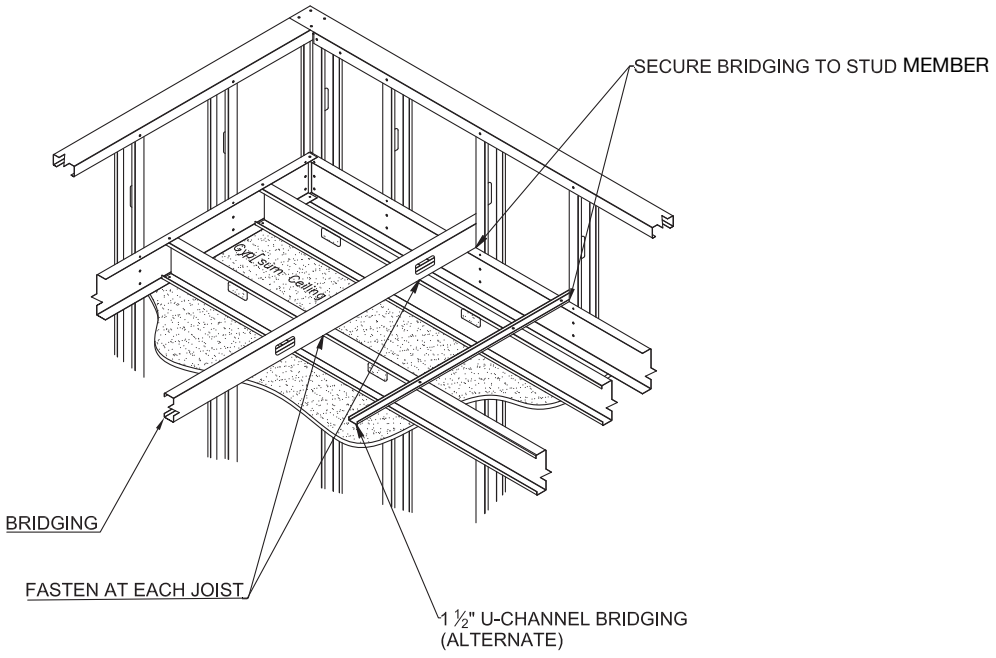

Allowable Ceiling Spans Deflection Notes

1 .For unbraced sections, allowable moment based on AISI S100 section C3.1.2 with unbraced length = listed span. For mid-span braced sections, allowable moment based on AISI S100 C3.1.2 with unbraced length = (listed span)/2.
2. For spans listed with "e", web stiffeners are required at end reactions. and re-number list of notes
3. Web crippling calculation based on bearing length = 1 inch.
4. Web crippling and shear capacity have not been reduced for punch-outs. If web punch-outs occur near supports, members must be checked for reduced shear and web crippling in accordance with the AISI S100.
5. Values are for simple span conditions.
6. Stud distortional buckling is based on an assumed Kϕ = 0.

Allowable Ceiling Spans Deflection Limit L/360

Section	Fy(ksi)	4 psf Lateral Support of Compression Flange						6 psf Lateral Support of Compression Flange						13 psf* Lateral Support of Compression Flange					
		Unsupported Joist Spacing (in) o.c.			Midspan Joist Spacing (in) o.c.			Unsupported Joist Spacing (in) o.c.			Midspan Joist Spacing (in) o.c.			Unsupported Joist Spacing (in) o.c.			Midspan Joist Spacing (in) o.c.		
		12	16	24	12	16	24	12	16	24	12	16	24	12	16	24	12	16	24
250S137-33	33	11' 9"	10' 10"	9' 9"	13' 0"	11' 10"	10' 4"	10' 6"	9' 9"	8' 8"	11' 4"	10' 4"	9' 0"	8' 6"	7' 11"	6' 11"	8' 9"	8' 0"	6' 11"
250S137-43	33	13' 2"	12' 1"	10' 9"	14' 2"	12' 10"	11' 2"	11' 8"	10' 9"	9' 7"	12' 4"	11' 2"	9' 9"	9' 4"	8' 7"	7' 7"	9' 6"	8' 8"	7' 7"
250S162-33	33	13' 5"	12' 5"	10' 10"	13' 8"	12' 5"	10' 10"	11' 11"	10' 10"	9' 5"	11' 11"	10' 10"	9' 5"	9' 2"	8' 4"	7' 4"	9' 2"	8' 4"	7' 4"
250S162-43	33	14' 10"	13' 6"	11' 9"	14' 10"	13' 6"	11' 9"	13' 0"	11' 9"	10' 3"	13' 0"	11' 9"	10' 3"	10' 0"	9' 1"	7' 11"	10' 0"	9' 1"	7' 11"
350S137-33	33	12' 9"	11' 9"	10' 6"	16' 10"	15' 4"	13' 4"	11' 5"	10' 6"	9' 5"	14' 9"	13' 4"	11' 8"	9' 3"	8' 6"	7' 8"	11' 4"	10' 4"	9' 0"
350S137-43	33	14' 1"	13' 0"	11' 7"	18' 4"	16' 8"	14' 6"	12' 7"	11' 7"	10' 4"	16' 0"	14' 6"	12' 8"	10' 1"	9' 4"	8' 4"	12' 4"	11' 3"	9' 10"
350S162-33	33	14' 6"	13' 5"	12' 0"	17' 8"	16' 1"	14' 0"	13' 0"	12' 0"	10' 9"	15' 5"	14' 0"	12' 3"	10' 6"	9' 9"	8' 9"	11' 11"	10' 10"	9' 5"
350S162-43	33	16' 0"	14' 9"	13' 2"	19' 3"	17' 6"	15' 3"	14' 3"	13' 2"	11' 9"	16' 9"	15' 3"	13' 4"	11' 6"	10' 8"	9' 6"	13' 0"	11' 9"	10' 3"
362S137-33	33	12' 10"	11' 11"	10' 7"	17' 4"	15' 9"	13' 9"	11' 6"	10' 8"	9' 6"	15' 2"	13' 9"	12' 0"	9' 4"	8' 7"	7' 9"	11' 8"	10' 7"	9' 3"
362S137-43	33	14' 3"	13' 1"	11' 8"	18' 10"	17' 1"	14' 11"	12' 8"	11' 8"	10' 5"	16' 5"	14' 11"	13' 1"	10' 2"	9' 5"	8' 5"	12' 8"	11' 6"	10' 1"
362S162-33	33	14' 8"	13' 6"	12' 1"	18' 2"	16' 6"	14' 5"	13' 1"	12' 1"	10' 10"	15' 10"	14' 5"	12' 7"	10' 8"	9' 10"	8' 10"	12' 3"	11' 1"	9' 8"
362S162-43	33	16' 1"	14' 10"	13' 3"	19' 9"	17' 11"	15' 8"	14' 4"	13' 3"	11' 10"	17' 3"	15' 8"	13' 8"	11' 7"	10' 9"	9' 7"	13' 4"	12' 1"	10' 7"
400S137-33	33	13' 2"	12' 2"	10' 11"	18' 8"	17' 0"	14' 10"	11' 9"	10' 11"	9' 9"	16' 4"	14' 10"	12' 11"	9' 7"	8' 10"	7' 11"	12' 7"	11' 5"	10' 0"
400S137-43	33	14' 7"	13' 5"	12' 0"	20' 4"	18' 6"	16' 2"	13' 0"	12' 0"	10' 8"	17' 9"	16' 2"	14' 1"	10' 5"	9' 8"	8' 8"	13' 9"	12' 6"	10' 11"
400S162-33	33	15' 0"	13' 10"	12' 5"	19' 7"	17' 10"	15' 6"	13' 5"	12' 5"	11' 2"	17' 1"	15' 6"	13' 7"	10' 11"	10' 1"	9' 1"	13' 3"	12' 0"	10' 6"
400S162-43	33	16' 6"	15' 3"	13' 7"	21' 4"	19' 4"	16' 11"	14' 9"	13' 7"	12' 2"	18' 7"	16' 11"	14' 9"	11' 11"	11' 0"	9' 10"	14' 5"	13' 1"	11' 5"
550S137-33	33	14' 6"	13' 5"	12' 0"	20' 10"	19' 4"	17' 5"	13' 0"	12' 0"	10' 10"	18' 9"	17' 5"	15' 8"	10' 7"	9' 10"	8' 10"	15' 4"	14' 3"	12' 8"e
550S137-43	33	15' 10"	14' 7"	13' 1"	22' 6"	20' 10"	18' 9"	14' 2"	13' 1"	11' 9"	20' 2"	18' 9"	16' 10"	11' 6"	10' 7"	9' 6"	16' 6"	15' 3"	13' 8"
550S162-33	33	16' 6"	15' 3"	13' 8"	23' 9"	22' 0"	19' 10"	14' 9"	13' 8"	12' 4"	21' 4"	19' 10"	17' 5"	12' 1"	11' 3"	10' 1"	16' 11"	15' 5"	13' 5"e
550S162-43	33	17 '11"	16' 7"	14' 10"	25' 7"	23' 9"	21' 4"	16' 1"	14' 10"	13' 4"	23' 0"	21' 4"	18' 11"	13' 0"	12' 1"	10' 10"	18' 5"	16' 9"	14' 8"
600S137-33	33	14' 10"	13' 9"	12' 4"	21' 4"	19' 10"	17' 10"	13' 4"	12' 4"	11' 1"	19' 3"	17' 10"	16' 0"	10' 11"	10' 1"	9' 1"	15' 8"	14' 5"	12' 10"
600S137-43	33	16' 2"	14' 11"	13' 5"	23' 1"	21' 4"	19' 2"	14' 6"	13' 5"	12' 0"	20' 9"	19' 2"	17' 3"	11' 9"	10' 10"	9' 9"	16' 11"	15' 8"	14' 1"
600S162-33	33	16' 10"	15' 8"	14' 1"	24' 4"	22' 7"	20' 4"	15' 2"	14' 1"	12' 8"	21' 11"	20' 4"	18' 4"	12' 5"	11' 6"	10' 4"	18' 0"	16' 6"	14' 5" e
600S162-43	33	18' 4"	17' 0"	15' 3"	26' 3"	24' 4"	21' 10"	16' 5"	15' 3"	13' 8"	23' 7"	21' 10"	19' 8"	13' 4"	12' 5"	11' 2"	19' 3"	17' 11"	15' 8"

* Loads that exceed 10 psf limit require an approved CP60 coating.

Header Load Notes

1. Spans are based on continous support of compression flange over the full length of header.
2. For two equal spans, the listed span is the distance from either end to the center support, with the header continous over the center support.
3. Header must be braced against rotation at all supports.
4. Web stiffeners required at mid-span supports.
5. Shear capacity at mid-span support has been reduced for the presence of pun chouts adjacent to the supports. Mid-span combined bending and shear check based on stiffened web.
6. Total load deflection limited to L/360. Live load deflection limit as noted.
7. Stud distortional buckling based on an assumed $K\varphi = 0$.
8. Headers consist of two boxed or back-to-back members.

Member	Yield Strength (ksi)	Header Allowable Uniform Loads (PLF)								
		SPAN								
		3 (ft)	4 (ft)	5 (ft)	6 (ft)	8 (ft)	10 (ft)	12 (ft)	14 (ft)	16 (ft)
350S137-33	33	653.7e	367.7e	235.3e	163.4e	75.4	38.6	22.3	14.1	9.4
350S137-43	33	899.0e	505.7e	323.7e	224.8e	96.9	49.6	28.7	18.1	12.1
350S137-54	50	1622.6e	912.7e	486.8	281.7	118.8	60.8	35.2	22.2	14.9
350S137-68	50	2092.3e	1159.5e	593.7	343.6	144.9	74.2	42.9	27	18.1
350S137-97	50	3392.2e	1542.9	790	457.1	192.9	98.7	57.1	36	24.1
350S162-33	33	753.2e	423.7e	271.2e	188.3e	86.8e	44.4	25.7	16.2	10.8
350S162-43	33	1044.0e	587.3e	375.9e	261.0e	111.7	57.2	33.1	20.8	14
350S162-54	50	1887.4e	1061.7e	562.5e	325.5	137.3	70.3	40.7	25.6	17.2
350S162-68	50	2435.7e	1344.6e	688.4	398.4	168.1	86.1	49.8	31.4	21
350S162-97	50	3879.1e	1803.2	923.3	534.3	225.4	115.4	66.8	42.1	28.2
362S137-33	33	679.8e	382.4e	244.7e	170.0e	81.8	41.9	24.2	15.3	10.2
362S137-43	33	937.0e	527.0e	337.3e	234.2e	105.2	53.9	31.2	19.6	13.1
362S137-54	50	1692.0e	951.7e	528.5e	305.9	129	66.1	38.2	24.1	16.1
362S137-68	50	2187.7e	1230.6e	645	373.3	157.5	80.6	46.7	29.4	19.7
362S137-97	50	3570.3e	1678.3	859.3	497.3	209.8	107.4	62.2	39.1	26.2
362S162-33	33	783.8e	440.9e	282.2e	195.9e	94.1e	48.2	27.9	17.6	11.8
362S162-43	33	1088.0e	612.0e	391.7e	272.0e	121.2	62	35.9	22.6	15.1
362S162-54	50	1967.4e	1106.7e	610.3e	353.2	149	76.3	44.1	27.8	18.6
362S162-68	50	2545.5e	1431.9e	747.3	432.5	182.4	93.4	54.1	34	22.8
362S162-97	50	4077.2e	1959.6e	1003.3	580.6	244.9	125.4	72.6	45.7	30.6
362S200-33	33	861.1e	484.3e	310.0e	215.3e	110.5e	56.6	32.7	20.6	13.8
362S200-43	33	1249.2e	702.7e	449.7e	312.3e	142.7e	73.1	42.3	26.6	17.8
362S200-54	50	2171.4e	1221.4e	720.2e	416.8	175.8	90	52.1	32.8	22
362S200-68	50	2955.2e	1662.3e	884.8e	512.1	216	110.6	64	40.3	27
362S200-97	50	4744.9e	2337.1e	1196.6	692.5	292.1	149.6	86.6	54.5	36.5
362S250-43	33	1315.1e	739.7e	473.4e	328.8e	167.4e	85.7	49.6	31.2	20.9
362S250-54	50	2280.8e	1282.9e	821.1e	487.5e	205.7	105.3	60.9	38.4	25.7
362S250-68	50	3056.8e	1719.5e	1042.2e	603.1	254.5	130.3	75.4	47.5	31.8
362S250-97	50	5210.3e	2768.2e	1417.3	820.2	346	177.2	102.5	64.6	43.3
362S300-54	50	2345.3e	1319.3e	844.3e	531.0e	224	114.7	66.4	41.8	28
362S300-68	50	3176.9e	1787.0e	1143.7e	681.4e	287.5	147.2	85.2	53.6	35.9
362S300-97	50	5099.2e	2868.3e	1622.3e	938.8	396.1	202.8	117.4	73.9	49.5
400S137-33	33	758.0e	426.4e	272.9e	189.5e	102.9e	52.7	30.5	19.2	12.9
400S137-43	33	1050.5e	590.9e	378.2e	262.6e	132.5	67.8	39.3	24.7	16.6
400S137-54	50	1899.7e	1068.6e	666.5e	385.7	162.7	83.3	48.2	30.4	20.3
400S137-68	50	2473.9e	1391.6e	814.6e	471.4	198.9	101.8	58.9	37.1	24.9
400S137-97	50	4120.6e	2126.7e	1088.9	630.1	265.8	136.1	78.8	49.6	33.2
400S162-33	33	875.0e	492.2e	315.0e	218.8e	118.2e	60.5	35	22	14.8
400S162-43	33	1219.6e	686.0e	439.0e	304.9e	152.3e	78	45.1	28.4	19
400S162-54	50	2206.8e	1241.3e	767.6e	444.2e	187.4	95.9	55.5	35	23.4
400S162-68	50	2875.0e	1617.2e	941.2e	544.7	229.8	117.7	68.1	42.9	28.7
400S162-97	50	4687.4e	2475.4e	1267.4	733.5	309.4	158.4	91.7	57.7	38.7
400S200-33	33	961.6e	540.9e	346.2e	240.4e	135.2e	71.0e	41.1	25.9	17.3
400S200-43	33	1400.2e	787.6e	504.1e	350.0e	178.8e	91.6	53	33.4	22.4
400S200-54	50	2433.4e	1368.8e	876.0e	522.8e	220.6	112.9	65.4	41.2	27.6
400S200-68	50	3329.8e	1873.0e	1111.3e	643.1e	271.3	138.9	80.4	50.6	33.9
400S200-97	50	5433.6e	2943.0e	1506.8e	872	367.9	188.3	109	68.6	46
400S250-43	33	1471.2e	827.5e	529.6e	367.8e	206.9e	107	61.9	39	26.1
400S250-54	50	2553.5e	1436.3e	919.3e	609.6e	257.2	131.7	76.2	48	32.1
400S250-68	50	3436.2e	1932.9e	1237.0e	754.4e	318.3	163	94.3	59.4	39.8
400S250-97	50	5934.4e	3338.1e	1777.0e	1028.3	433.8	222.1	128.5	80.9	54.2
400S300-54	50	2624.9e	1476.5e	945.0e	656.2e	279.5	143.1	82.8	52.2	34.9
400S300-68	50	3569.5e	2007.9e	1285.0e	849.2e	358.3	183.4	106.2	66.8	44.8
400S300-97	50	5795.1e	3259.8e	2025.8e	1172.3	494.6	253.2	146.5	92.3	61.8

NOTES:

1. Spans are based on continous support of compression flange over the full length of header.
2. For two equal spans, the listed span is the distance from either end to the center support, with the header continous over the center support.
3. Header must be braced against rotation at all supports.
4. Web stiffeners required at mid-span supports.
5. Web stiffeners required at mid span supports.
6. Values are for un-punched members.
7. Total load deflection is limited to L/360.
8. Allowable moment, shear and web crippling are based on twice the capacity of a single member. The moment of inertia is based on twice the value of the single member.
9. Web crippling check is based on 1" bearing length at end supports.
10. Allowable loads are for simply supported headers with uniform bending loads only.
11. Headers are made from two " boxed" or "back-to-back" members.
12. "e" web stiffeners are required at ends.

Header Load Tables (Continued)

Member	Yield Strength (ksi)	Header Allowable Uniform Loads (PLF)								
		SPAN								
		3 (ft)	4 (ft)	5 (ft)	6 (ft)	8 (ft)	10 (ft)	12 (ft)	14 (ft)	16 (ft)
550S137-33	33	931.4e	698.5e	477.5e	331.6e	186.5e	112.1e	64.9e	40.9	27.4
550S137-43	33	1938.2e	1090.3e	697.8e	484.6e	272.6e	144.7e	83.7	52.7	35.3
550S137-54	50	3560.7e	2002.9e	1281.9e	825.1e	348.1e	178.2	103.1	64.9	43.5
550S137-68	50	4654.7e	2618.3e	1675.7e	1013.0e	427.3	218.8	126.6	79.7	53.4
550S137-97	50	6625.5e	3726.9e	2363.2e	1367.6e	576.9	295.4	170.9	107.7	72.1
550S162-33	33	931.4e	698.5e	539.3e	374.5e	210.7e	127.5e	73.8e	46.5e	31.1
550S162-43	33	2066.7e	1232.9e	789.1e	548.0e	308.2e	164.6e	95.3e	60	40.2
550S162-54	50	3979.4e	2238.4e	1432.6e	940.5e	396.8	203.2	117.6	74	49.6
550S162-68	50	5177.0e	2912.1e	1863.7e	1157.8e	488.5e	250.1	144.7	91.1	61.1
550S162-97	50	7426.1e	4177.2e	2673.4e	1572.5e	663.4	339.7	196.6	123.8	82.9
600S137-33	33	850.8e	638.1e	479.1e	332.7e	187.1e	119.8e	78.7e	49.6e	33.2
600S137-43	33	1887.0e	1061.4e	679.3e	471.7e	265.4e	169.8e	103.3e	65	43.6
600S137-54	50	3445.9e	1938.3e	1240.5e	861.5e	429.8e	220.1	127.3	80.2	53.7
600S137-68	50	4569.2e	2570.2e	1644.9e	1142.3e	528.3e	270.5	156.5	98.6	66
600S137-97	50	7526.5e	4233.7e	2709.5e	1694.8e	715	366.1	211.8	133.4	89.4
600S162-33	33	850.8e	638.1e	510.5e	422.5e	237.7e	152.1e	90.7e	57.1e	38.3e
600S162-43	33	1887.6e	1390.0e	889.6e	617.8e	347.5e	202.4e	117.1e	73.8	49.4
600S162-54	50	3763.8e	2527.1e	1617.4e	1123.2e	488.3e	250.0e	144.7	91.1	61
600S162-68	50	5846.8e	3288.8e	2104.9e	1426.3e	601.7e	308.1	178.3	112.3	75.2
600S162-97	50	8403.7e	4727.1e	3025.3e	1941.3e	819	419.3	242.7	152.8	102.4
600S200-33	33	850.8e	638.1e	510.5e	425.4e	255.8e	163.7e	105.0e	66.1e	44.3e
600S200-43	33	1887.6e	1415.7e	919.6e	638.6e	359.2e	229.9e	135.7e	85.5e	57.2
600S200-54	50	3763.8e	2532.9e	1621.1e	1125.8e	566.7e	290.1e	167.9	105.7	70.8
600S200-68	50	6475.4e	3642.4e	2331.1e	1618.8e	700.0e	358.4	207.4	130.6	87.5
600S200-97	50	9560.6e	5377.9e	3441.8e	2270.9e	958.0e	490.5	283.9	178.8	119.8
600S250-43	33	1887.6e	1415.7e	967.4e	671.8e	377.9e	341.9e	155.9e	98.2e	65.8e
600S250-54	50	3763.8e	2666.7e	1706.7e	1185.2e	649.9e	332.8e	192.6	121.3	81.2
600S250-68	50	6146.9e	3457.6e	2212.9e	1536.7e	807.0e	413.2e	239.1	150.6	100.9
600S250-97	50	10278.1e	5781.4e	3700.1e	2569.5e	1109.0e	567.8	328.6	206.9	138.6
600S300-54	50	3763.8e	2760.5e	1766.7e	1226.9e	690.1e	357.2e	206.7e	130.2	87.2
600S300-68	50	6414.2e	3608.0e	2309.1e	1603.5	894.2e	457.8e	265	166.9	111.8
600S300-97	50	9967.5e	5606.7e	3588.3e	2491.9e	1246.8e	638.4	369.4	232.6	155.8
800S137-33[1]	33	632.0e	474.0e	379.2e	316.0e	237.0e	163.9e	113.8e	83.6e	64.0e
800S137-43	33	1401.5e	1051.2e	840.9e	655.6e	368.8e	236.0e	163.9e	120.4e	86.1e
800S137-54	50	2788.4e	2091.3e	1673.0e	1200.9e	675.5e	432.3e	253.8e	159.8	107.1
800S137-68	50	5627.6e	3663.6e	2344.7e	1628.3e	915.9e	550.9e	318.8e	200.8	134.5
800S137-97	50	9533.7e	5362.7e	3432.1e	2383.4e	1340.7e	751.5e	434.9	273.9	183.5
800S162-33[1]	33	632.0e	474.0e	379.2e	316.0e	237.0e	187.0e	129.9e	95.4e	72.7e
800S162-43	33	1401.5e	1051.2e	840.9e	700.8e	419.6e	268.5e	186.5e	137.0e	96.6e
800S162-54	50	2788.4e	2091.3e	1673.0e	1362.6e	766.5e	490.5e	285.1e	179.5e	120.3
800S162-68	50	5627.6e	4150.2e	2656.1e	1844.5e	1037.6e	619.7e	358.6e	225.8	151.3
800S162-97	50	10771.0e	6058.7e	3877.5e	2692.7e	1514.7e	849.0e	491.3	309.4	207.3
800S200-33[1]	33	632.0e	474.0e	379.2e	316.0e	237.0e	189.6e	149.3e	109.7e	84.0e
800S200-43	33	1401.5e	1051.2e	840.9e	700.8e	525.6e	340.6e	236.5e	168.9e	113.1e
800S200-54	50	2788.4e	2091.3e	1673.0e	1394.2e	934.7e	574.5e	332.5e	209.4e	140.3
800S200-68	50	5627.6e	4220.7e	3376.6e	2415.2e	1358.5e	711.5e	411.8e	259.3e	173.7
800S200-97	50	14314.9e	8052.1e	5153.4e	3578.7e	1912.6e	979.3e	566.7	356.9	239.1
800S250-43	33	1401.5e	1051.2e	840.9e	700.8e	525.6e	346.0e	240.3e	176.6e	128.4e
800S250-54	50	2788.4e	2091.3e	1673.0e	1394.2e	951.2e	608.8e	377.6e	237.8e	159.3e
800S250-68	50	5627.6e	4220.7e	3288.0e	2283.3e	1284.4e	809.5e	468.4e	295	197.6
800S250-97	50	14513.7e	8558.1e	5477.2e	3803.6e	2139.5e	1117.9e	646.9e	407.4	272.9
800S300-54	50	2788.4e	2091.3e	1673.0e	1394.2e	957.5e	612.8e	405.5e	255.4e	171.1e
800S300-68	50	5627.6e	4220.7e	3376.6e	2378.2e	1337.8e	856.2e	515.5e	324.6e	217.5
800S300-97	50	14513.7e	8243.2e	5275.7e	3663.6e	2060.8e	1249.1e	722.9e	455.2	305

NOTES:

1. Spans are based on continous support of compression flange over the full length of header.
2. For two equal spans, the listed span is the distance from either end to the center support, with the header continous over the center support.
3. Header must be braced against rotation at all supports.
4. Web stiffeners required at mid-span supports.
5. Web stiffeners required at mid span supports.
6. Values are for un-punched members.
7. Total load deflection is limited to L/360.
8. Allowable moment, shear and web crippling are based on twice the capacity of a single member. The moment of inertia is based on twice the value of the single member.
9. Web crippling check is based on 1" bearing length at end supports.
10. Allowable loads are for simply supported headers with uniform bending loads only.
11. Headers are made from two " boxed" or "back-to-back" members.
12. "e" web stiffeners are required at ends.

Header Load Tables (Continued)

Member	Yield Strength (ksi)	Header Allowable Uniform Loads (PLF)								
		SPAN								
		3 (ft)	4 (ft)	5 (ft)	6 (ft)	8 (ft)	10 (ft)	12 (ft)	14 (ft)	16 (ft)
1000S162-43[1]	33	1114.6e	835.9e	668.7e	557.3e	418.0e	334.4e	238.3e	175.1e	134.0e
1000S162-54	50	2214.5e	1660.8e	1328.7e	1107.2e	830.4e	627.5e	435.8e	302.8e	202.8e
1000S162-68	50	4460.5e	3345.4e	2676.3e	2230.3e	1343.9e	860.1e	597.3e	385.1e	258.0e
1000S162-97	50	13151.6e	8157.3e	5220.7e	3625.5e	2039.3e	1305.2e	858.2e	540.5e	362.1
1000S200-43[1]	33	1114.6e	835.9e	668.7e	557.3e	418.0e	334.4e	269.0e	197.6e	151.3e
1000S200-54	50	2214.5e	1660.8e	1328.7e	1107.2e	830.4e	664.3e	472.7e	345.1e	231.2e
1000S200-68	50	4460.5e	3345.4e	2676.3e	2230.3e	1509.7e	966.2e	671.0e	438.2e	293.6e
1000S200-97	50	13151.6e	9333.3e	5973.3e	4148.1e	2333.3e	1493.3e	978.1e	615.9e	412.6
1000S250-43[1]	33	1114.6e	835.9e	668.7e	557.3e	418.0e	334.4e	278.6e	217.3e	166.4e
1000S250-54	50	2214.5e	1660.8e	1328.7e	1107.2e	830.4e	664.3e	520.9e	382.7e	270.5e
1000S250-68	50	4460.5e	3345.4e	2676.3e	2230.3e	1672.7e	1105.1e	767.5e	501.7e	336.1e
1000S250-97	50	13151.6e	9863.7e	7500.1e	5208.4e	2929.7e	1875.0e	1104.1e	695.3e	465.8e
1000S300-54	50	2214.5e	1660.8e	1328.7e	1107.2e	830.4e	664.3e	527.4e	387.5e	293.8e
1000S300-68	50	4460.5e	3345.4e	2676.3e	2230.3e	1672.7e	1118.5e	776.8e	549.9e	368.4e
1000S300-97	50	13151.6e	9863.7e	7183.5e	4988.6e	2806.1e	1795.9e	1230.1e	774.6e	518.9e
1200S162-54[1]	50	1836.5e	1377.4e	1101.9e	918.2e	688.7e	550.9e	459.1e	389.9e	298.5e
1200S162-68	50	3694.3e	2770.7e	2216.6e	1847.2e	1385.4e	1055.9e	733.3e	538.7e	398.7e
1200S162-97	50	10862.7e	8147.0e	6517.6e	4536.6e	2551.8e	1633.2e	1134.1e	833.3e	574.0e
1200S200-54[1]	50	1836.5e	1377.4e	1101.9e	918.2e	688.7e	550.9e	459.1e	393.5e	323.3e
1200S200-68	50	3694.3e	2770.7e	2216.6e	1847.2e	1385.4e	1108.3e	821.4e	603.5e	450.2e
1200S200-97	50	10862.7e	8147.0e	6517.6e	5167.2e	2906.5e	1860.2e	1291.8e	949.1e	647.3e
1200S250-54[1]	50	1836.5e	1377.4e	1101.9e	918.2e	688.7e	550.9e	459.1e	393.5e	335.1e
1200S250-68	50	3694.3e	2770.7e	2216.6e	1847.2e	1385.4e	1108.3e	833.7e	612.5e	469.9e
1200S250-97	50	10862.7e	8147.0e	6517.6e	5431.3e	3142.1e	2010.9e	1396.5e	1026.0e	725.7e
1200S300-54[1]	50	1836.5e	1377.4e	1101.9e	918.2e	688.7e	550.9e	459.1e	393.5e	344.3e
1200S300-68	50	3694.3e	2770.7e	2216.6e	1847.2e	1385.4e	1108.3e	919.6e	675.6e	517.3e
1200S300-97	50	10862.7e	8147.0e	6517.6e	5431.3e	3636.9e	2327.6e	1616.4e	1187.6e	802.7e

NOTES:

1. Spans are based on continous support of compression flange over the full length of header.
2. For two equal spans, the listed span is the distance from either end to the center support, with the header continous over the center support.
3. Header must be braced against rotation at all supports.
4. Web stiffeners required at mid-span supports.
5. Web stiffeners required at mid span supports.
6. Values are for un-punched members.
7. Total load deflection is limited to L/360.
8. Allowable moment, shear and web crippling are based on twice the capacity of a single member. The moment of inertia is based on twice the value of the single member.
9. Web crippling check is based on 1" bearing length at end supports.
10. Allowable loads are for simply supported headers with uniform bending loads only.
11. Headers are made from two " boxed" or "back-to-back" members.
12. "e" web stiffeners are required at ends.

Section Properties - U Channels

Section	Design Thickness (in)	Gross						Effective Properties 33 ksi			
		Area (in2)	Weight (lb/ft)	Ix (in4)	Rx (in)	Iy (in4)	Ry (in)	Ix (in4)	Sx (in3)	Ma (in-k)	Va (lb)
75U050-54	0.0566	0.087	0.30	0.007	0.288	0.002	0.155	0.007	0.019	0.45	315
150U050-54	0.0566	0.129	0.44	0.039	0.547	0.003	0.144	0.039	0.052	1.22	840
200U050-54	0.0566	0.157	0.54	0.079	0.709	0.003	0.136	0.079	0.079	1.87	1190
250U050-54	0.0566	0.186	0.63	0.139	0.866	0.003	0.128	0.139	0.111	2.64	1540

PROPERTY NOTES:
1. For Deflection calculations, use effective Ixx
2. Inside bend radius taken as 3/32".

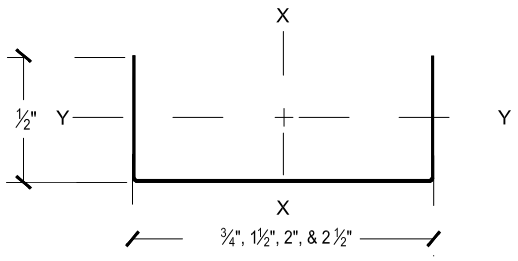

Allowable U-Channel Ceiling Spans - L/240

Section		4 psf Channel Spacing (in) o.c.					6 psf Channel Spacing (in) o.c.					13 psf* Channel Spacing (in) o.c.					15 psf* Channel Spacing (in) o.c.				
		24	36	48	60	72	24	36	48	60	72	24	36	48	60	72	24	36	48	60	72
75U050-54	Single	3' 11"	3' 5"	3' 1"	2' 10"	2' 8"	3' 5"	3' 0"	2' 8"	2' 6"	2' 4"	2' 7"	2' 4"	2' 1"	1' 11"	1' 9"	2' 6"	2' 2"	2' 0"	1' 10"	1' 8"
	Multiple	4' 10"	4' 2"	3' 10"	3' 7"	3' 4''	4' 2"	3' 8"	3' 4"	3' 1"	2' 10"	3' 3"	2' 9"	2' 4"	2' 1"	1' 11"	3' 1"	2' 7"	2' 2"	2' 0"	1' 9"
150U050-54	Single	5' 6"	4' 10"	4' 5''	4' 1"	3' 10"	4' 10"	4' 3"	3' 10"	3' 7"	3' 5"	3' 9"	3' 3"	3' 0"	2' 9"	2' 7"	3' 7"	3' 2"	2' 10"	2' 7"	2' 5"
	Multiple	7' 1"	6' 2"	5' 8"	5' 3"	4' 11"	6' 2"	5' 5"	4' 11"	4' 7"	4' 4"	4' 10"	4' 2"	3' 9"	3' 4"	3' 0"	4' 7"	4' 0"	3' 6"	3' 1"	2' 9"
200U050-54	Single	5' 10"	5' 1"	4' 8"	4' 4"	4' 1"	5' 1"	4' 6"	4' 1"	3' 10"	3' 7"	4' 0"	3' 6'	3' 2"	3' 0"	2' 10"	3' 10"	3' 4"	3' 1"	2' 10"	2' 8"
	Multiple	7' 5"	6' 6"	5' 11"	5' 6"	5' 2"	6' 6"	5' 8"	5' 2"	4' 10"	4' 7"	5' 1"	4' 5"	4' 0"	3' 9"	3' 6"	4' 10"	4' 3"	3' 10"	3' 7"	3' 2"
250U050-54	Single	6' 1"	5' 4"	4' 10"	4' 6"	4' 3"	5' 4"	4' 8"	4' 3"	4' 0"	3' 9"	4' 2"	3' 8"	3' 4"	3' 1"	2' 11"	4' 0"	3' 6"	3' 2"	3' 0"	2' 10"
	Multiple	7' 9"	6' 9"	6' 2"	5' 9"	5' 5"	6' 9"	5' 11"	5' 5"	5' 0"	4' 9"	5' 3"	4' 7"	4' 3"	3' 11"	3' 9"	5' 0"	4' 5"	4' 0"	3' 9"	3' 7"

* Loads that exceed 10 psf limit require an approved CP60 coating.

Allowable U-Channel Ceiling Spans - L/360

Section		4 psf Channel Spacing (in) o.c.					6 psf Channel Spacing (in) o.c.					13 psf* Channel Spacing (in) o.c.					15 psf* Channel Spacing (in) o.c.				
		24	36	48	60	72	24	36	48	60	72	24	36	48	60	72	24	36	48	60	72
75U050-54	Single	3' 5"	3' 0"	2' 8"	2' 6"	2' 4"	3' 0"	2' 7"	2' 4"	2' 2"	2' 1"	2' 4"	2' 0"	1' 10	1' 8"	1' 7"	2' 2"	1' 11"	1' 9"	1' 7"	1' 6"
	Multiple	4' 2"	3' 8"	3' 4"	3' 1"	2' 11"	3' 8"	3' 2"	2' 11"	2' 8"	2' 7"	2' 10"	2' 6''	2' 3"	2' 1"	1' 11"	2' 8"	2' 4"	2' 2"	2' 0"	1' 9"
150U050-54	Single	5' 6"	4' 10"	4' 5"	4' 1"	3' 10"	4' 10"	4' 3"	3' 10"	3' 7"	3' 5"	3' 9"	3' 3"	3' 0"	2' 9"	2' 7"	3' 7"	3' 2"	2' 10"	2' 7"	2' 5"
	Multiple	7' 1"	6' 2"	5' 8"	5' 3"	4' 11"	6' 2"	5' 5"	4' 11"	4' 7"	4' 4"	4' 10"	4' 2"	3' 9"	3' 4"	3' 0"	4' 7"	4' 0"	3' 6"	3' 1"	2' 9"
200U050-54	Single	5' 10"	5' 1"	4' 8"	4' 4"	4' 1"	5' 1"	4' 6"	4' 1"	3'10"	3' 7"	4' 0"	3' 6"	3' 2"	3' 0"	2' 10''	3' 10"	3' 4"	3' 1"	2' 10"	2' 8"
	Multiple	7' 5"	6' 6"	5' 11"	5' 6"	5' 2"	6' 6"	5' 8"	5' 2"	4' 10"	4' 7"	5' 1"	4' 5"	4' 0"	3' 9"	3' 6"	4' 10"	4' 3"	3' 10"	3' 7"	3' 2"
250U050-54	Single	6' 1"	5' 4"	4' 10"	4' 6"	4' 3"	5' 4"	4' 8"	4' 3"	4' 0"	3' 9"	4' 2"	3' 8"	3' 4"	3' 1"	2' 11"	4' 0"	3' 6"	3' 2"	3' 0"	2' 10"
	Multiple	7' 9"	6' 5"	6' 2"	5' 9"	5' 5"	6' 9"	5' 11"	5' 5"	5' 0"	4' 9"	5' 3"	4' 7"	4' 3"	3' 11"	3' 9"	5' 0"	4' 5"	4' 0"	3' 9"	3' 7"

* Loads that exceed 10 psf limit require an approved CP60 coating.

SPAN NOTES:
1. Fy = 33 ksi for all sections
2. Multiple span indicates two or more equal spans with channel continuous over interior supports
3. Bearing Lengths = 0.75"
4. Allowable spans based on the compression flange laterally unbraced
5. Include Torsion
6. Loads that exceed 10 psf. limit require an approved CP60 coating.

Structural Properties for Hat Furring Channels

Section	Fy (ksi)	Design Thickness (in)	Gross Properties						Effective Properties		
			Area (in2)	Weight (lb/ft)	Ix (in4)	Rx (in)	Iy (in4)	Ry (in)	Ix (in4)	Sx (in3)	Ma (Ft-lb)
087F125-18	33	0.0188	0.070	0.239	0.009	0.356	0.0422	0.774	0.0086	0.0160	26.41
087F125-27	33	0.0283	0.105	0.357	0.013	0.353	0.0628	0.774	0.0131	0.0272	44.78
087F125-30	33	0.0312	0.115	0.392	0.014	0.352	0.0691	0.774	0.0143	0.0307	50.47
087F125-33	33	0.0346	0.127	0.433	0.016	0.351	0.0763	0.774	0.0157	0.0337	55.43

NOTES:
1. Hems and offset in flange, if present, are ingored.
2. Design thickness used for determination of properties. Minimum delivered thickness must be no less than 95% of design thickness.
3. Effective properties are given as the minimum value for positive or negative bending.

Hat Furring Channel Allowable Ceiling Spans - L/240

Section	Fy (ksi)		Uniform Load								
			4 psf Spacing (in) oc			6 psf Spacing (in) oc			13 psf Spacing (in) oc		
			12	16	24	12	16	24	12	16	24
087F125-18	33	Single	5′ 2″	4′ 9″	4′ 1″	4′ 6″	4′ 1″	3′ 7″	3′ 6″	3′ 2″	2′ 9″
		Multiple	6′ 5″	5′ 10″	5′ 1″	5′ 7″	5′ 1″	4′ 2″	4′ 0″	3′ 6″	2′ 10″
087F125-27	33	Single	6′ 0″	5′ 5″	4′ 9″	5′ 3″	4′ 9″	4′ 2″	4′ 0″	3′ 8″	3′ 2″
		Multiple	7′ 5″	6′ 9″	5′ 10″	6′ 6″	5′ 10″	5′ 2″	5′ 0″	4′ 6″	3′ 8″
087F125-30	33	Single	6′ 2″	5′ 7″	4′ 11″	5′ 5″	4′ 11″	4′ 3″	4′ 2″	3′ 9″	3′ 4″
		Multiple	7′ 7″	6′ 11″	6′ 1″	6′ 8″	6′ 1″	5′ 3″	5′ 2″	4′ 8″	3′ 11″
087F125-33	33	Single	6′ 4″	5′ 9″	5′ 1″	5′ 7″	5′ 1″	4′ 5″	4′ 4″	3′ 11″	3′ 5″
		Multiple	7′ 10″	7′ 2″	6′ 3″	6′ 10″	6′ 3″	5′ 5″	5′ 4″	4′ 10″	4′ 1″

Hat Furring Channel Allowable Ceiling Spans - L/360

Section	Fy (ksi)		Uniform Load								
			4 psf Spacing (in) oc			6 psf Spacing (in) oc			13 psf Spacing (in) oc		
			12	16	24	12	16	24	12	16	24
087F125-18	33	Single	4′ 6″	4′ 1″	3′ 7″	4′ 0″	3′ 7″	3′ 2″	3′ 1″	2′ 9″	2′ 5″
		Multiple	5′ 7″	5′ 1″	4′ 5″	4′ 11″	4′ 5″	3′ 11″	3′ 9″	3′ 5″	2′ 10″
087F125-27	33	Single	5′ 3″	4′ 9″	4′ 2″	4′ 7″	4′ 2″	3′ 7″	3′ 6″	3′ 2″	2′ 10″
		Multiple	6′ 6″	5′ 10″	5′ 2″	5′ 8″	5′ 2″	4′ 6″	4′ 4″	4′ 0″	3′ 6″
087F125-30	33	Single	5′ 5″	4′ 11″	4′ 3″	4′ 8″	4′ 3″	3′ 9″	3′ 8″	3′ 4″	2′ 11″
		Multiple	6′ 8″	6′ 1″	5′ 3″	5′ 10″	5′ 3″	4′ 7″	4′ 6″	4′ 1″	3′ 7″
087F125-33	33	Single	5′ 7″	5′ 1″	4′ 5″	4′ 10″	4′ 5″	3′ 10″	3′ 9″	3′ 5″	3′ 0″
		Multiple	6′ 10″	6′ 3″	5′ 5″	6′ 0″	5′ 5″	4′ 9″	4′ 8″	4′ 3″	3′ 8″

NOTES:
1. Single spans taken as the minimum span based on moment, shear, web crippling or deflection
2. Multiple spans indicate two or more equal, continuous spans with span length measured support to support.
3. Multiple spans taken as the minimum span based on moment, shear, web crippling, deflection combined bending and shear or combined and web crippling
4. Web crippling values based on 1" bearing at end and interior supports.

CEMCO™

Steel Framing and Metal Lath

800.775.2362

WWW.CEMCOSTEEL.COM

Corporate Headquarters & Main Manufacturing Facility

263 North Covina Lane
City of Industry, CA 91744

Phone: 800.775.2362
Fax: 626.330.7598

Northern California Manufacturing Facility

1001-A Pittsburg Antioch Hwy
Pittsburg, CA 94565

Phone: 925.473.9340
Fax: 925.473.9341

Denver Colorado Manufacturing Facility

490 Osage Street
Denver, CO 80204

Phone: 303.572.3626
Fax: 303.572.3627

Ft. Worth Texas Manufacturing Facility

8600 Will Rogers Blvd
Ft. Worth, TX 76140

Phone: 817.568.1525
Fax: 817.568.2759

For more information, please contact CEMCO's technical services group at 800-416-2278. This technical information reflects the most current information available and supersedes any and all previous publications effective July 1, 2013