Fire-Rated Assemblies in Commercial Construction

The Purple Book

National Gypsum®

Copyright © National Gypsum Properties, LLC
All Rights Reserved

NATIONAL GYPSUM COMPANY

FIRE-RATED ASSEMBLIES
IN COMMERCIAL CONSTRUCTION

© National Gypsum Properties, LLC

These gypsum wallboard system details are intended solely as technical support incident to the sale and use of National Gypsum Company products. They may be used as a reference by architects, engineers, other design professionals, contractors, building code officials, or other competent construction industry trade personnel considering the selection, specification and use of National Gypsum Company products in these systems.

Architects, engineers, designers or contractors involved should review these details with the governing code or inspection official at the time of the job submittal to determine if there are any discrepancies with local code or regulatory requirements. In any event, they must NOT be used without a complete evaluation by the owner's design professional to verify the suitability of the system for a given application.

These system details may be printed and/or transferred electronically as needed by the user, subject to terms and limitations of any applicable license agreement. Any unauthorized duplication or reuse of the material contained herein is a violation of law.

For a guide to fire safety information relating to certain systems described in this PURPLE ® Book, please refer to the information on National Gypsum Company's website at http://nationalgypsum.com/ng/resources/fire-safety.htm , or call 1-800-NATIONAL®.

National Gypsum®

© National Gypsum Properties, LLC

TABLE OF CONTENTS

Detail No.	Title	UL Design	Head of Wall Firestop System	Page
GN Series - General Information				
GN 101	UL Designations for Gold Bond® Products			1
GN 102	ASTM and Gypsum Association Standards			2
GN 103	Wall Priority Legend			3
SS Series - Steel Stud Partitions 09 29 00				
SS 101	1 Hour Partition to Steel Deck	U465, V438	ProForm Quick-Set FS-90 Compound	4
SS 102	1 Hour Partition to Steel Deck (Castle Cut)	U465, V438	Firestop Sealant	5
SS 103	1 Hour Partition to Steel Deck	U465, V438	Elastomeric Spray Firestop	6
SS 104	1 Hour Partition to Steel Deck	U465, V438	Firestop Sealant	7
SS 105	1 Hour Partition with Deflection Track	U465, V438	Firestop Sealant, Double Top Track	8
SS 106	1 Hour Partition to Steel Deck	U465, V438	Joint Forming Profile and Elastomeric Spray Firestop	9
SS 107	1 Hour Partition with Deflection Track	U465, V438	Gypsum board, Fire Trak Shadowline	10
SS 108	1 Hour Partition to Steel Beam	U465, V438	Elastomeric Spray Firestop	11
SS 109	1 Hour Partition Offset from Beam	U465, V438	Elastomeric Spray Firestop	12
SS 110	1 Hour Partition to Concrete Slab	U465, V438	Firestop Sealant	13
SS 111	1 Hour 1 Sided Partition to Steel Deck	V497	ProForm Quick-Set FS-90 Compound	14
SS 112	1 Hour Chase Wall to Steel Deck	V488	ProForm Quick-Set FS-90 Compound	15
SS 113	1 Hour Cement Board Partition to Steel Deck	V452	Elastomeric Spray Firestop	16
SS 201	2 Hour Partition to Steel Deck	U411, V438	ProForm Quick-Set FS-90 Compound	17
SS 202	2 Hour Partition to Steel Deck (Castle Cut)	U411, V438	Firestop Sealant	18
SS 203	2 Hour Partition to Steel Deck	U411, V438	Elastomeric Spray Firestop	19
SS 204	2 Hour Partition to Steel Deck	U411, V438	Firestop Sealant	20
SS 205	2 Hour Partition with Deflection Track	U411, V438	Firestop Sealant, Double Top Track	21
SS 206	2 Hour Partition to Steel Deck	U411, V438	Joint Forming Profile and Elastomeric Spray Firestop	22
SS 207	2 Hour Partition with Deflection Track	U411, V438	Gypsum board, Fire Trak Shadowline	23
SS 208	2 Hour Partition to Steel Beam	U411, V438	Elastomeric Spray Firestop	24
SS 209	2 Hour Partition Offset from Beam	U411, V438	Elastomeric Spray Firestop	25
SS 210	2 Hour Partition to Concrete Slab	U411, V438	Firestop Sealant	26
SS 211	2 Hour Partition to Steel Deck	U411, V438	ProForm Quick-Set FS-90 Compound (1 Side)	27
SS 212	2 Hour Chase Wall to Steel Deck	V488	ProForm Quick-Set FS-90 Compound	28
SS 213	2 Hour Cement Board Partition to Steel Deck	V452	Elastomeric Spray Firestop	29
SS 301	3 Hr Partition to Steel Deck	V438	Elastomeric Spray Firestop	30
SS 401	4 Hr Partition to Steel Deck	V438	Elastomeric Spray Firestop	31
SS 501	1 Hr Partition Joint Staggering Requirements	U465, V438		32
SS 502	2 Hr Partition Joint Staggering Requirements	U411, V438		33
SS 503	Control Joints for Fire-Rated Systems			34
SS 504	1 Hour Partition Corner Detail			35
SS 505	Intersections of Rated Walls			36

National Gypsum

© National Gypsum Properties, LLC

TABLE OF CONTENTS

Detail No.	Title	UL Design	Head of Wall Firestop System	Page
SS 506	1 Hour Partition at 1 Hour Exterior Wall			37
SS 507	1 Hour Partition at Non-Rated Exterior Wall			38
SS 508	2 Hour Partition at 1 Hour Exterior Wall			39
SW Series - Shaftwall Assemblies 09 21 16.23				
SW 101	1 Hour Shaftwall Partition	U499, W419		40
SW 102	1 Hour Shaftwall with Deflection Track	U499, W419	Firestop Sealant	41
SW 103	1 Hour Shaftwall with Deflection Track	U499, W419	Firestop Sealant	42
SW 104	1 Hour Shaftwall to Steel Deck	U499, W419	Elastomeric Spray Firestop	43
SW 105	1 Hour Shaftwall to Steel Deck	U499, W419	Elastomeric Spray Firestop	44
SW 106	1 Hour Shaftwall with Deflection Track	U499, W419	Gypsum board, Fire Trak Shadowline	45
SW 107	1 Hour Shaftwall Partition to Steel Beam	U499, W419	Elastomeric Spray Firestop	46
SW 108	1 Hour Shaftwall Partition Offset from Beam	U499, W419	Elastomeric Spray Firestop	47
SW 201	2 Hour Shaftwall Partition	U497, W419		48
SW 202	2 Hour Shaftwall Partition at Stair	U498, W419		49
SW 203	2 Hour Shaftwall with Deflection Track	U497, W419	Firestop Sealant	50
SW 204	2 Hour Shaftwall to Steel Deck	U497, W419	Elastomeric Spray Firestop	51
SW 205	2 Hour Shaftwall to Steel Deck	U497, W419	Elastomeric Spray Firestop	52
SW 206	2 Hour Shaftwall with Deflection Track	U497, W419	Gypsum board, Fire Trak Shadowline	53
SW 207	2 Hour Shaftwall Partition to Steel Beam	U497, W419	Elastomeric Spray Firestop	54
SW 208	2 Hour Shaftwall Partition Offset from Beam	U497, W419	Elastomeric Spray Firestop	55
SW 301	3 Hour Shaftwall with Deflection Track	W414, W419	Gypsum board, Fire Trak Shadowline	56
SW 401	4 Hour Shaftwall Partition	V451, W419		57
SW 501	Control Joints for Shaftwall Systems			58
SW 601	2 Hour Shaftwall Corner Detail			59
SW 602	2 Hour Shaftwall Corner Detail			60
SW 603	2 Hour Shaftwall Corner Detail			61
SW 604	2 Hour Shaftwall Corner Detail			62
SW 605	2 Hour Shaftwall Corner Detail			63
SW 606	Shaftwall Overhang at Slab Edge			64
SW 701	Shaftwall Framing at Duct Penetration			65
SW 702	2 Hour Shaftwall with Duct Penetration			66
SW 703	2 Hour Horizontal Shaftwall	G586		67
SW 704	2 Hour Horizontal Duct Protection			68

National Gypsum

© National Gypsum Properties, LLC

TABLE OF CONTENTS

Detail No.	Title	UL Design	Head of Wall Firestop System	Page
ST Series - Stair Shaftwall Details 09 21 16.23				
ST 101	Floor Plan of Stair at Lateral Brace			69
ST 102	Stair Shaftwall Section at Lateral Brace			70
ST 103	Stair Shaftwall Corner at Lateral Brace			71
ST 104	Stair Shaftwall Section at Lateral Brace			72
EV Series - Elevator Shaftwall Details 09 21 16.23				
EV 101	Elevator Shaft Enclosure Plan			73
EV 102	Position Indicator and Control Box Protection in Elevator Shaftwall			74
EV 103	Elevator Shaftwall Head and Jamb Details			75
CR Series - Rated Corridor Assemblies				
CR 101	1 Hour Corridor Assembly			76
CR 102	1 Hour Corridor Assembly			77
CR 103	1 Hour Corridor Assembly			78
CR 201	2 Hour Corridor Assembly			79
CR 202	2 Hour Corridor Assembly			80
CR 203	2 Hour Corridor Assembly			81
CR 204	2 Hour Corridor Assembly			82
FC Series - Rated Floor-Ceiling Assemblies				
FC 202	2 Hour Floor-Ceiling Assembly	G514		83
CL Series - Rated Steel Column Assemblies				
CL 101	1 Hour Rated Column	X528		84
CL 201	2 Hour Rated Column	X528		85
CL 301	3 Hour Rated Column	X510		86
CL 401	4 Hour Rated Column	X501		87
BM Series - Rated Steel Beam Assemblies				
BM 101	2 Hour Steel Beam	N501		88
PN - Penetrations Through Rated Wall and Floor Assemblies 07 84 13				
PN 201	Pipe Penetration Through Wall	W-L-1041		89
PN 202	Cable Penetration Through Wall	W-L-3035		90
PN 301	Pipe Penetration Through Floor	C-AJ-1163		91
PN 302	Cable Penetration Through Floor	C-AJ-3073		92
PN 303	Void Fill Assembly	C-AJ-0038		93
SN - Sound Ratings for Fire-Rated Partitions				
SN 101	Sound Ratings for 1 Hour Partitions			94
SN 102	Sound Ratings for 2 Hour Partitions			95
SN 103	Sound Ratings for Shaftwall Partitions			96
RE 101	Repair of Fire-Rated Gypsum Board Partitions			97

National Gypsum

© National Gypsum Properties, LLC

UL Core Type Designation	Product Name
Type FSK	5/8” Gold Bond® Brand Kal-Kore® Fire-Shield® Plaster Base, Type X
Type FSK-C	1/2” Gold Bond® Brand Kal-Kore® Fire-Shield C™ Plaster Base, Type C 5/8” Gold Bond® Brand Kal-Kore® Fire-Shield C™ Plaster Base, Type C
Type FSL30	5/8” Gold Bond® Brand High Strength Fire-Shield® LITE® 30 Gypsum Board
Type FSMR-C	1/2” Gold Bond® Brand XP® Fire-Shield C™ Gypsum Board, Type C 5/8” Gold Bond® Brand XP® Fire-Shield C™ Gypsum Board, Type C
Type FSW	5/8” Gold Bond® Brand Fire-Shield® Gypsum Board, Type X 5/8” Gold Bond® Brand Fire-Shield® Exterior Soffit Board, Type X 5/8” Gold Bond® Brand Hi Abuse® XP® Fire-Shield® Gypsum Board,Type X 5/8” Gold Bond® Brand Sta-Smooth® Fire-Shield® Gypsum Board, Type X 5/8” Gold Bond® Brand Fire-Shield® Gypsum Sheathing, Type X 5/8” Gold Bond® Brand XP® Fire-Shield® Gypsum Board, Type X 1” Gold Bond® Brand Fire-Shield® Shaftliner, Type X 1” Gold Bond® Brand Fire-Shield® Shaftliner XP®, Type X
Type FSW-C	1/2” Gold Bond® Brand Fire-Shield C™ Gypsum Board, Type C 1/2” Gold Bond® Brand Sta-Smooth® Fire-Shield C™ Gypsum Board, Type C 5/8” Gold Bond® Brand Fire-Shield C™ Gypsum Board, Type C 5/8” Gold Bond® Brand Sta-Smooth® Fire-Shield C™ Gypsum Board,Type C
Type FSW-G	1/2” Gold Bond® Brand Gridstone® Gypsum Ceiling Panels 1/2” Gold Bond® Brand Gridstone® CleanRoom Gypsum Ceiling Panels
Type FSW-3	5/8” Gold Bond® Brand Fire-Shield® Gypsum Sheathing, Type X 5/8” Gold Bond® Brand XP® Fire-Shield® Gypsum Board, Type X
Type FSW-5	5/8” Gold Bond® Brand Hi-Impact® XP® Fire-Shield® Gypsum Board, Type X 5/8” Gold Bond® Brand Hi Abuse® XP® Fire-Shield® Gypsum Board,Type X
Type FSW-6	5/8” Gold Bond® Brand eXP® Extended Exposure Sheathing, Type X 5/8” Gold Bond® Brand eXP® Interior Extreme® Gypsum Panel, Type X 5/8” Gold Bond® Brand eXP® Fire-Shield® Tile Backer, Type X 5/8” Gold Bond® Brand eXP® Interior Extreme® IR Gypsum Panel, Type X 5/8” Gold Bond® Brand eXP® Interior Extreme® AR Gypsum Panel, Type X
Type FSW-7	1” Gold Bond® Brand eXP® Extended Exposure Shaftliner, Type X
Type SoundBreak XP	5/8” Gold Bond® Brand SoundBreak® XP® Gypsum Board, Type X
Type FSL	5/8” Gold Bond® Brand High Strength Fire-Shield® LITE®, Type X
Type FSW-8	5/8” Gold Bond® Brand Fire-Shield® Gypsum Sheathing, Type X

© National Gypsum Properties, LLC

ASTM Product Standards	
C 1177	Standard Specification for Glass Mat Gypsum Substrate for Use as Sheathing
C 1178	Standard Specification for Coated Glass Mat Water-Resistant Gypsum Backing Panel
C 1396	Standard Specification for Gypsum Board
C 1658	Standard Specification for Glass Mat Gypsum Panels
ASTM Test Standards	
C 473	Standard Test Methods for Physical testing of Gypsum Panel Products
C 1629	Standard Classification for Abuse-Resistant Nondecorated Interior Gypsum Panel Products and Fiber-Reinforced Cement Panels
D 3273	Standard Test Method for Resistance to Growth of Mold on the Surface of Interior Coatings in an Environmental Chamber
E 84	Standard Test Method for Surface Burning Characteristics of Building Materials
E 90	Standard Test Method for Laboratory Measurement of Airborne Sound Transmission Loss of Building Partitions and Elements
E 96	Standard Test Methods for Water Vapor Transmission of Materials
E 119	Standard Test Methods for Fire Tests of Building Construction and Materials
E 136	Standard Test Method for Behavior of Materials in a Vertical Tube Furnace at 750°C
G 21	Standard Practice for Determining Resistance of Synthetic Polymeric Materials to Fungi
ASTM Application Standards	
C 840	Standard Specification for Application and Finishing of Gypsum Board
C 1280	Standard Specification for Application of Exterior Gypsum Panel Products for Use as Sheathing

Gypsum Association Standards	
GA-214	Recommended Levels of Gypsum Board Finish
GA-216	Application and Finishing of Gypsum Panel Products
GA-253	Application of Gypsum Sheathing

© National Gypsum Properties, LLC

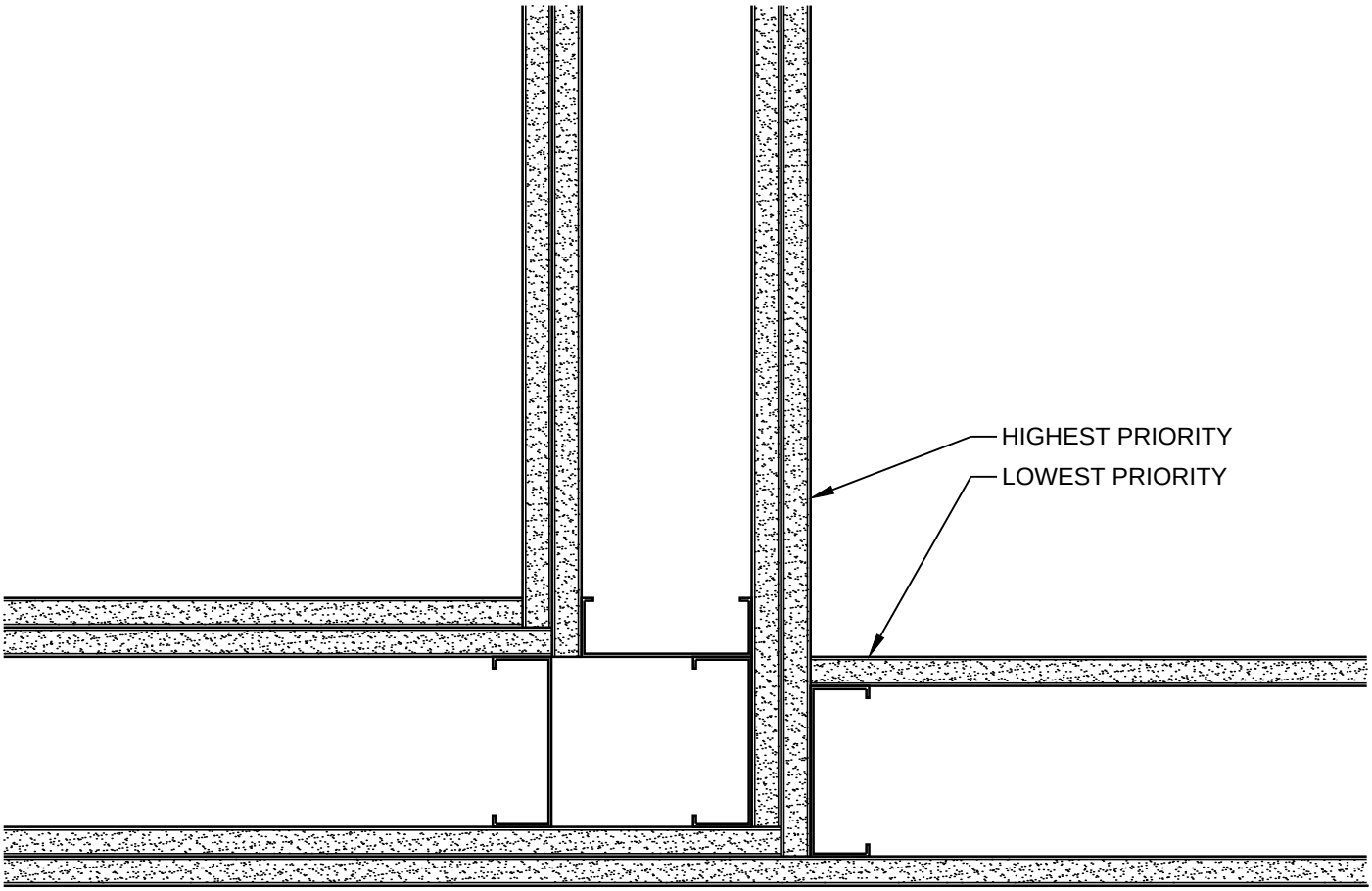

WALL PRIORITY LEGEND	
2 HOUR FIRE AND SMOKE WALL	PRIORITY 1
2 HOUR FIRE WALL	PRIORITY 2
2 HOUR SHAFTWALL	PRIORITY 2
1 HOUR FIRE AND SMOKE WALL	PRIORITY 3
1 HOUR FIRE WALL	PRIORITY 4
NON-RATED WALL	PRIORITY 5

DATE: 11/05/13	WALL PRIORITY LEGEND	National Gypsum
SCALE: 3"=1'-0"	DETAIL: GN 103	

© National Gypsum Properties, LLC

HEAD OF WALL - 1 HR
WHI 495-PSV-1067

PARTITION - 1 HR
UL DESIGN: U465
UL DESIGN: V438

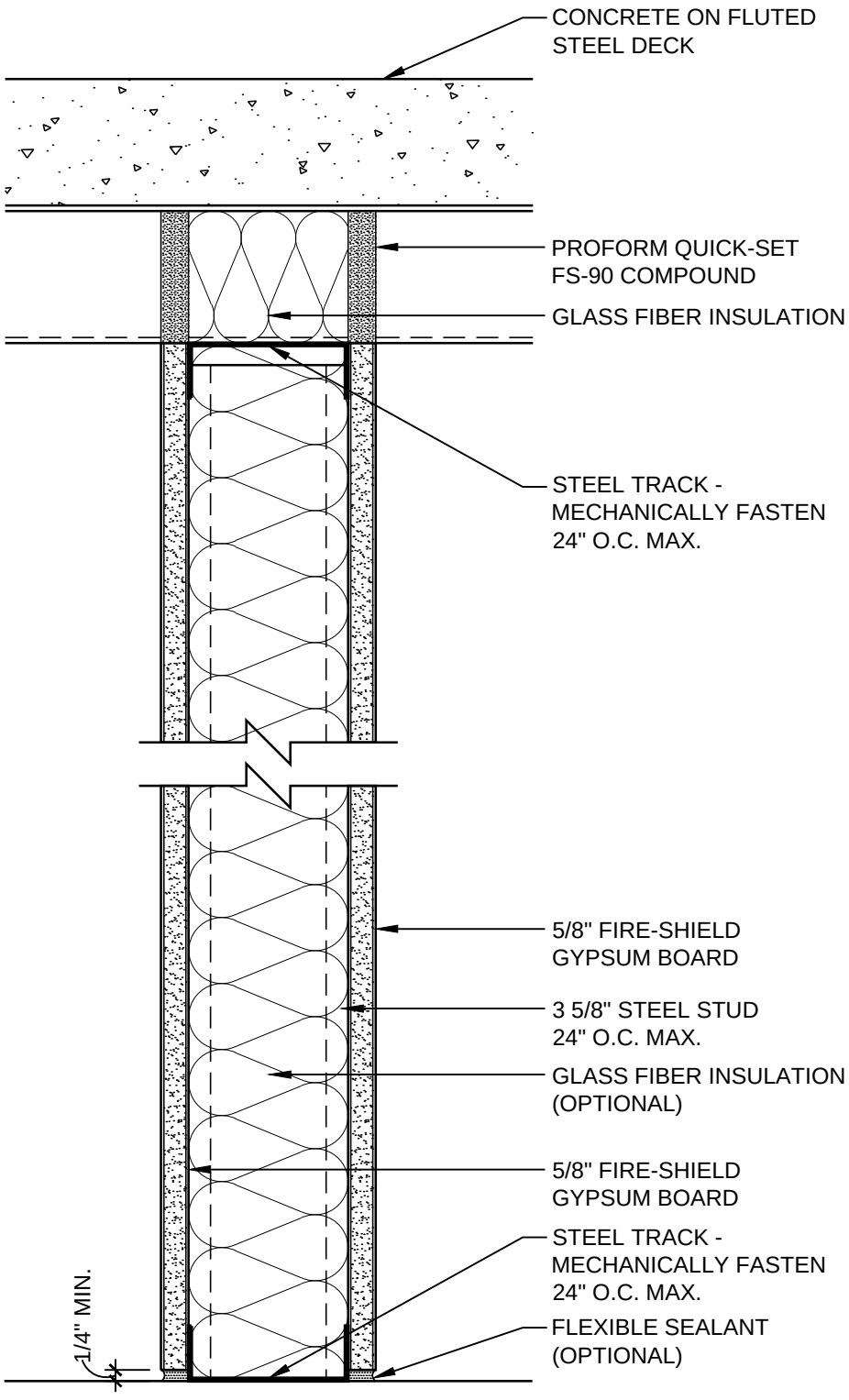

DATE: 11/05/13	1 HOUR PARTITION TO STEEL DECK	National Gypsum
SCALE: 3"=1'-0"	DETAIL: SS101	

© National Gypsum Properties, LLC

HEAD OF WALL - 1 HR
UL DESIGN: HW-D-0103
UL DESIGN: HW-D-0076

PARTITION - 1 HR
UL DESIGN: U465
UL DESIGN: V438

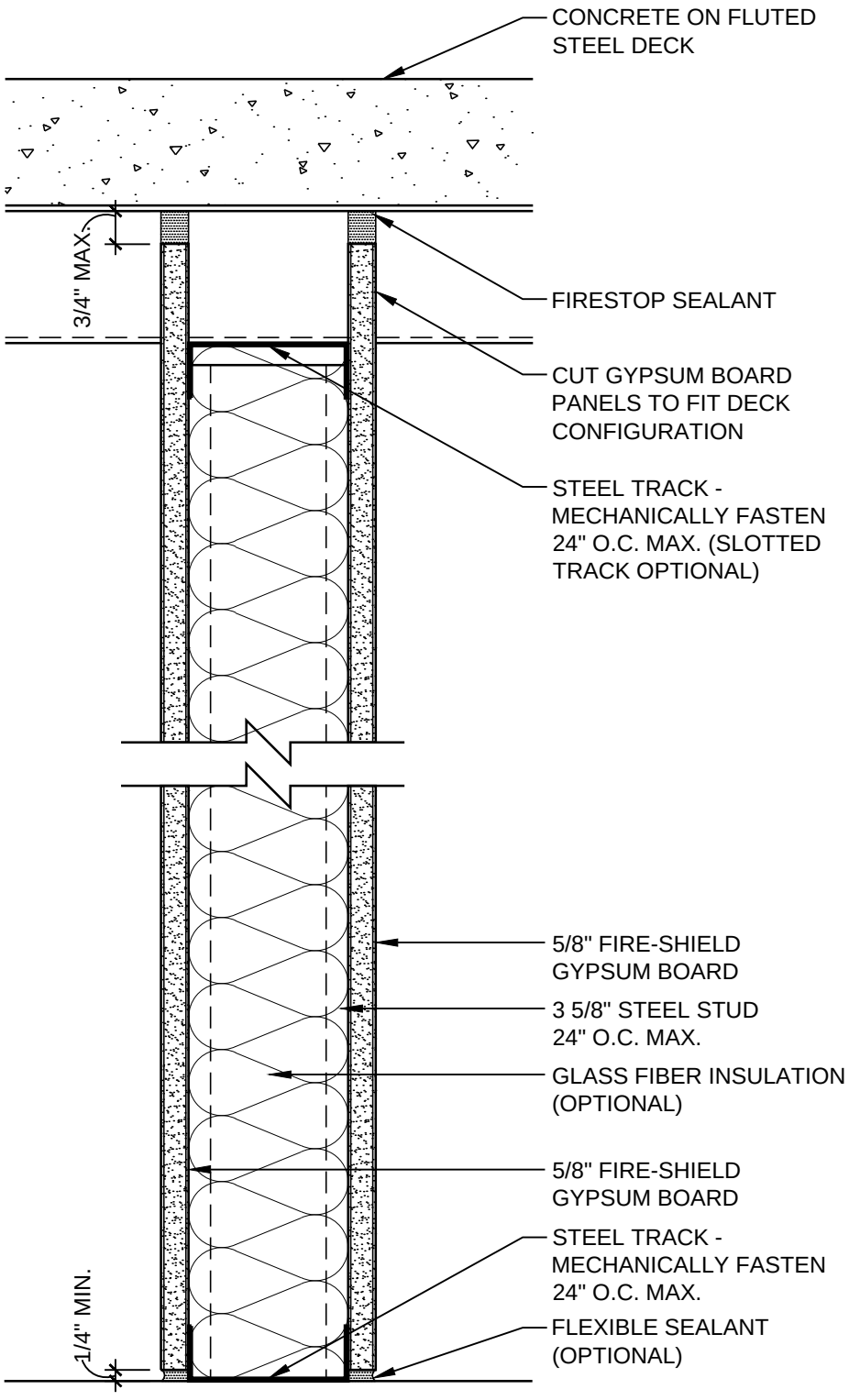

DATE: 11/05/13	1 HOUR PARTITION TO STEEL DECK	National Gypsum
SCALE: 3"=1'-0"	DETAIL: SS 102	

© National Gypsum Properties, LLC

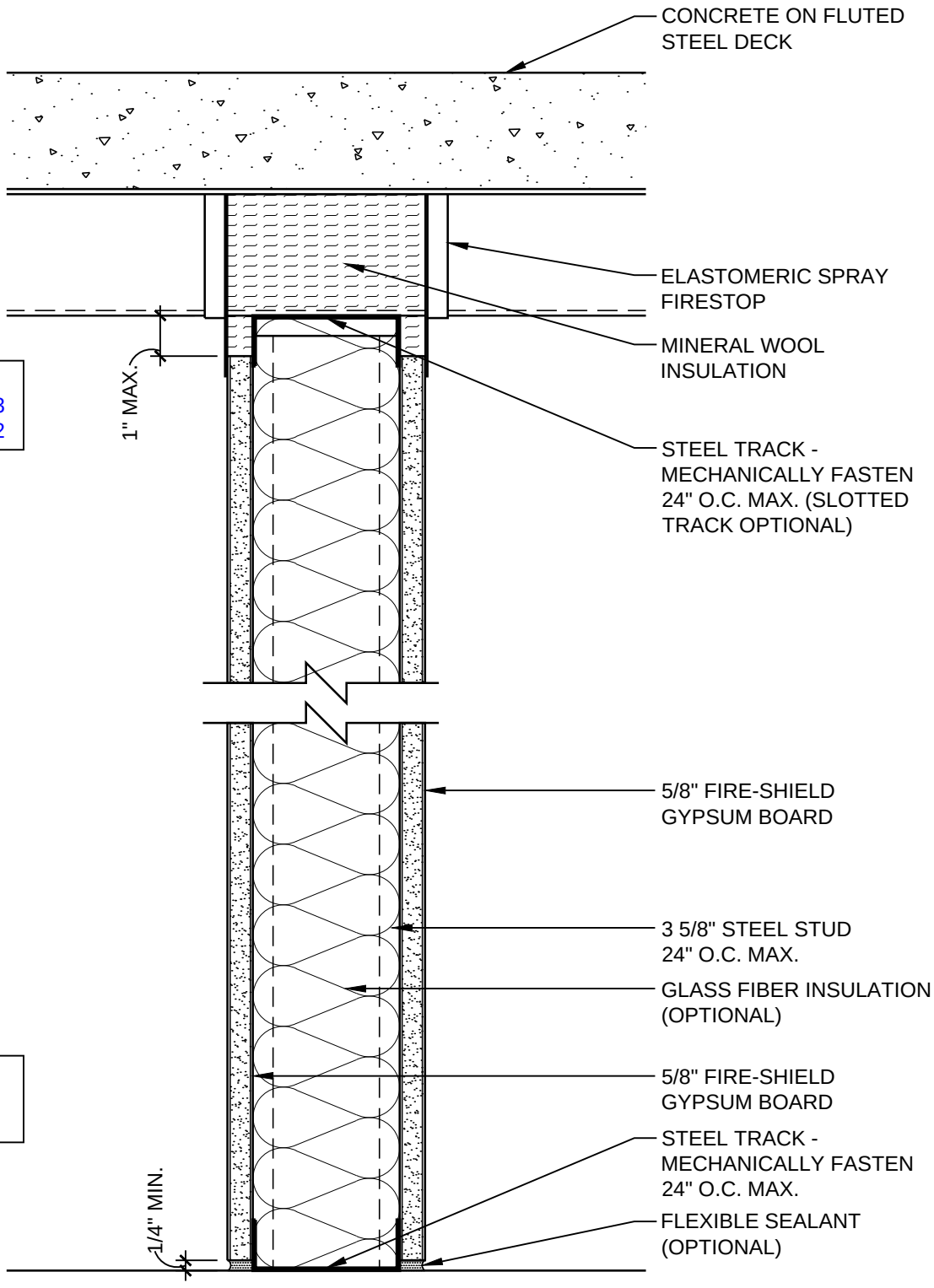

HEAD OF WALL - 1 HR
UL DESIGN: HW-D-0043
UL DESIGN: HW-D-0292

PARTITION - 1 HR
UL DESIGN: U465
UL DESIGN: V438

DATE: 11/05/13	1 HOUR PARTITION TO STEEL DECK	National Gypsum
SCALE: 3"=1'-0"	DETAIL: SS 103	

© National Gypsum Properties, LLC

HEAD OF WALL - 1 HR
UL DESIGN: HW-D-0034
UL DESIGN: HW-D-0045

PARTITION - 1 HR
UL DESIGN: U465
UL DESIGN: V438

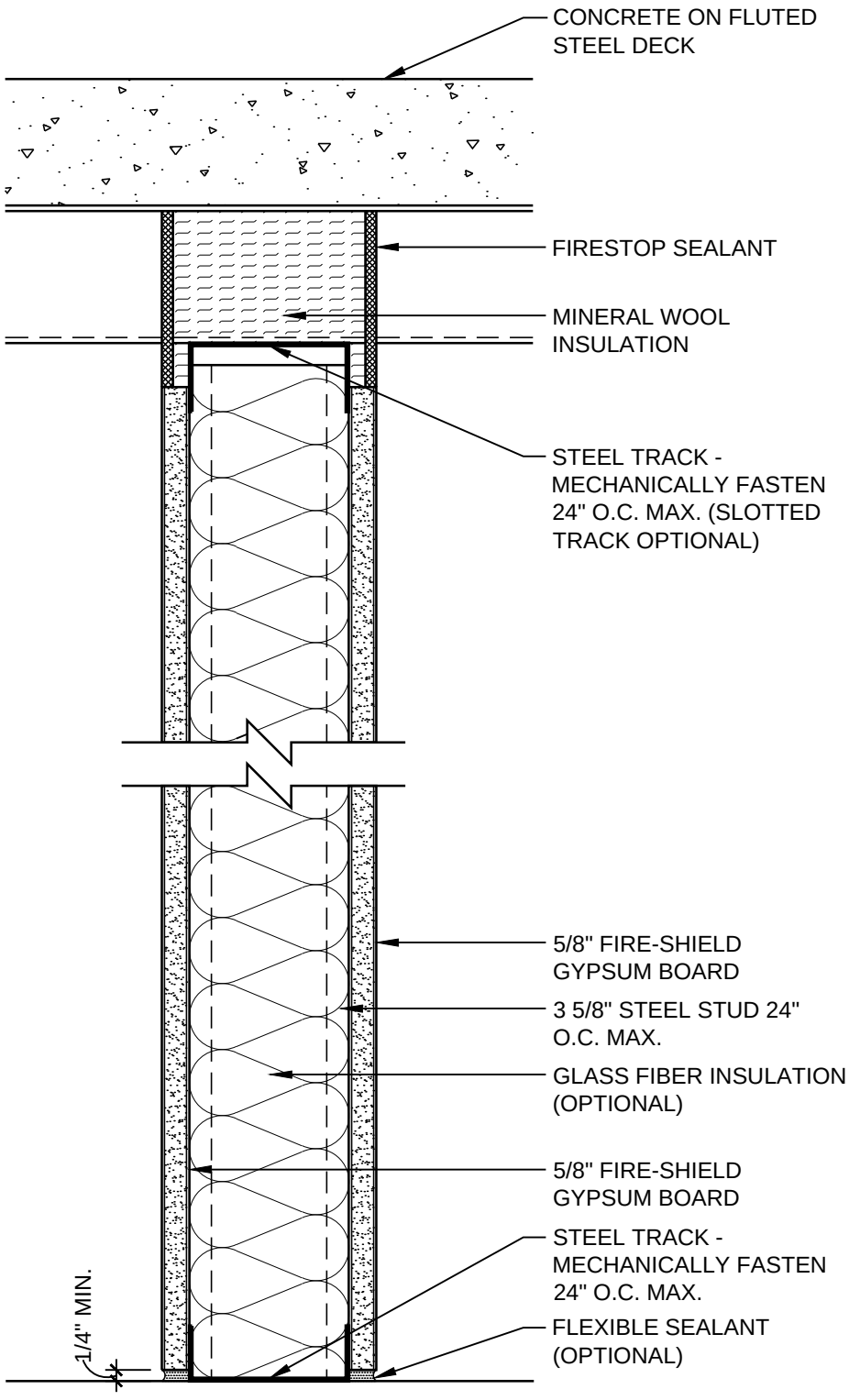

DATE: 11/05/13	1 HOUR PARTITION TO STEEL DECK	National Gypsum
SCALE: 3"=1'-0"	DETAIL: SS 104	

© National Gypsum Properties, LLC

HEAD OF WALL - 1 HR
UL DESIGN: HW-D-0034
UL DESIGN: HW-D-0045

PARTITION - 1 HR
UL DESIGN: U465
UL DESIGN: V438

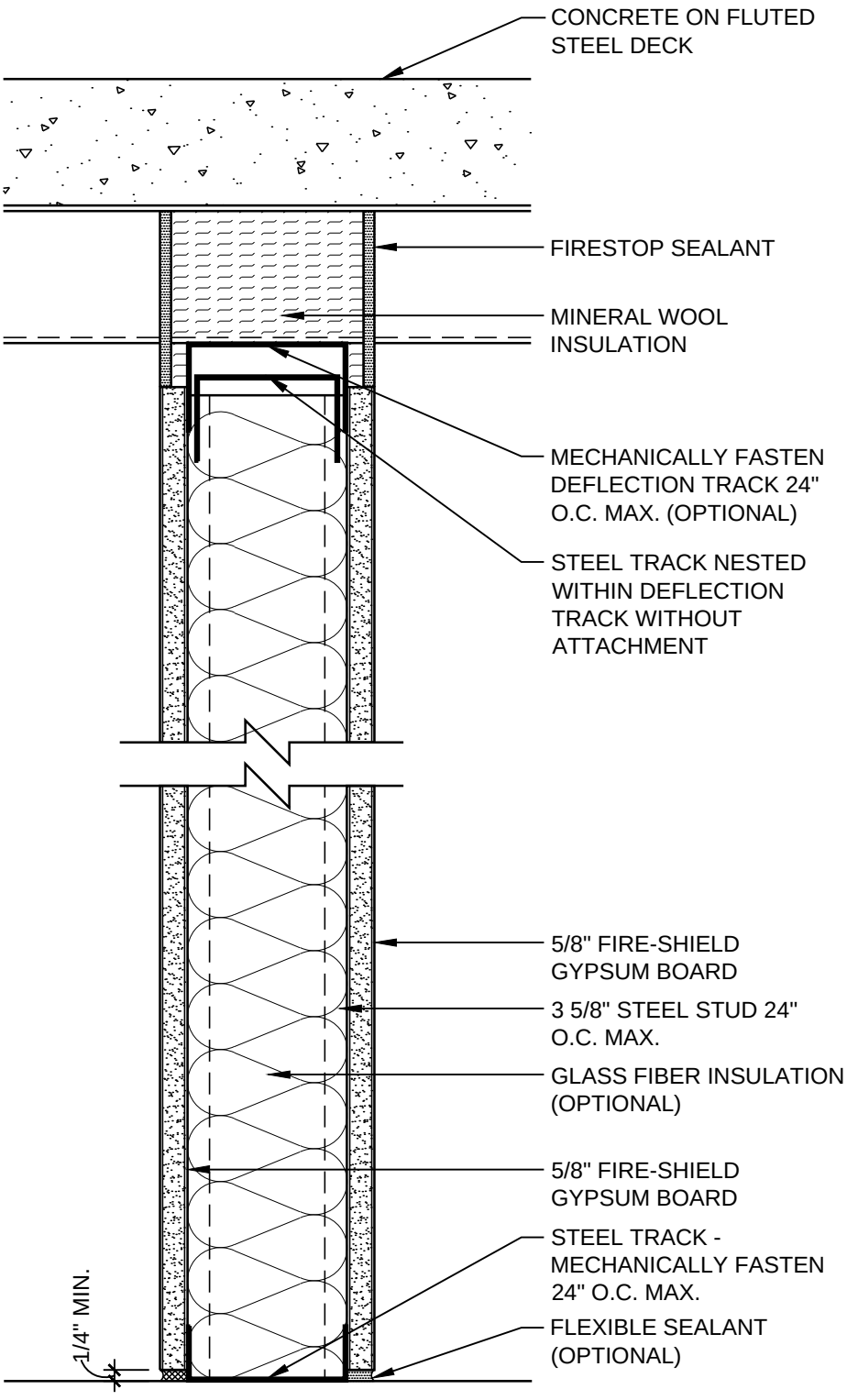

DATE: 11/05/13	1 HOUR PARTITION WITH DEFLECTION TRACK	National Gypsum
SCALE: 3"=1'-0"	DETAIL: SS 105	

© National Gypsum Properties, LLC

HEAD OF WALL - 1 HR
UL DESIGN: HW-D-0363

PARTITION - 1 HR
UL DESIGN: U465
UL DESIGN: V438

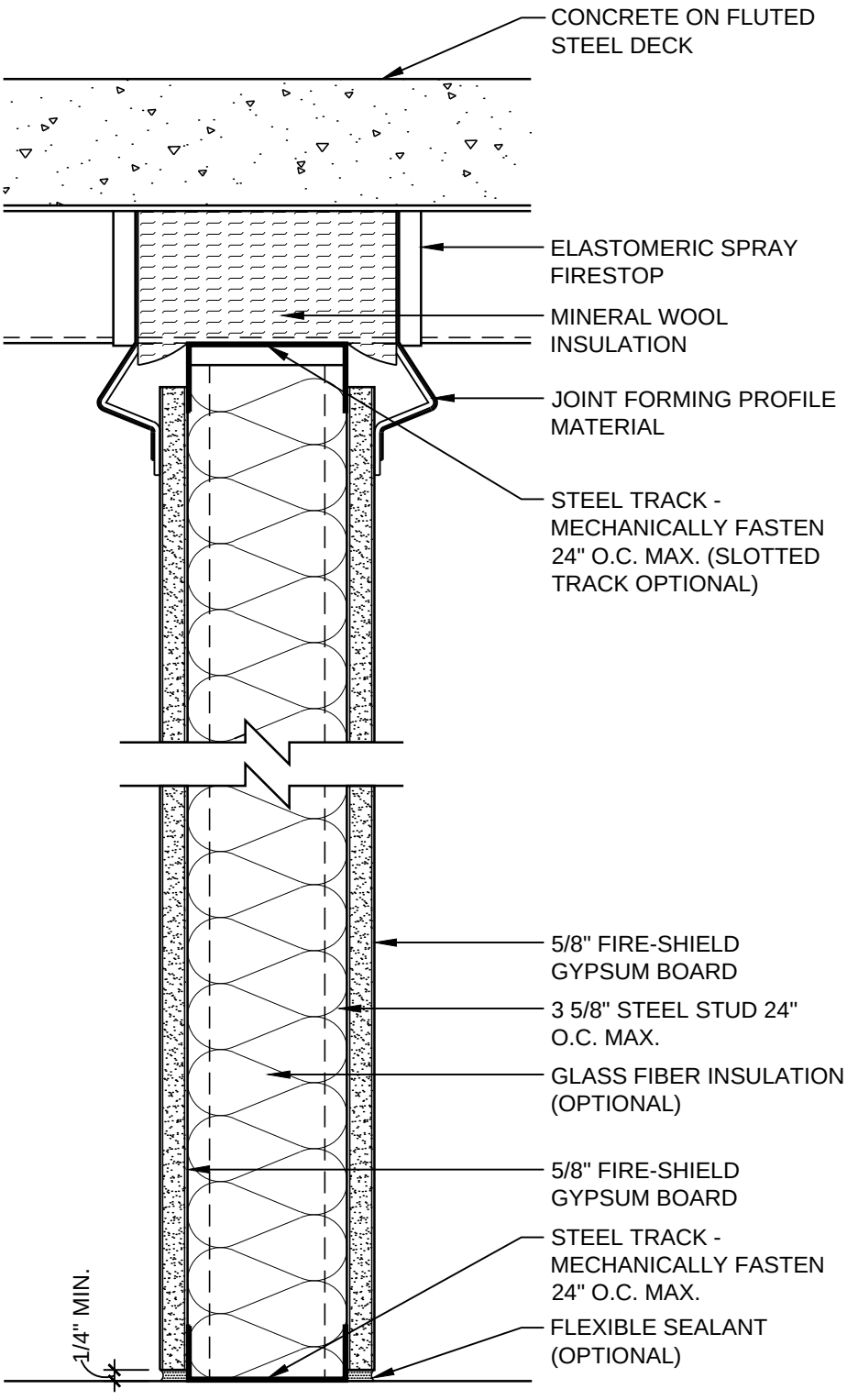

DATE: 11/05/13	1 HOUR PARTITION TO STEEL DECK	National Gypsum
SCALE: 3"=1'-0"	DETAIL: SS 106	

© National Gypsum Properties, LLC

HEAD OF WALL - 1 HR
UL DESIGN: HW-D-0060

PARTITION - 1 HR
UL DESIGN: U465
UL DESIGN: V438

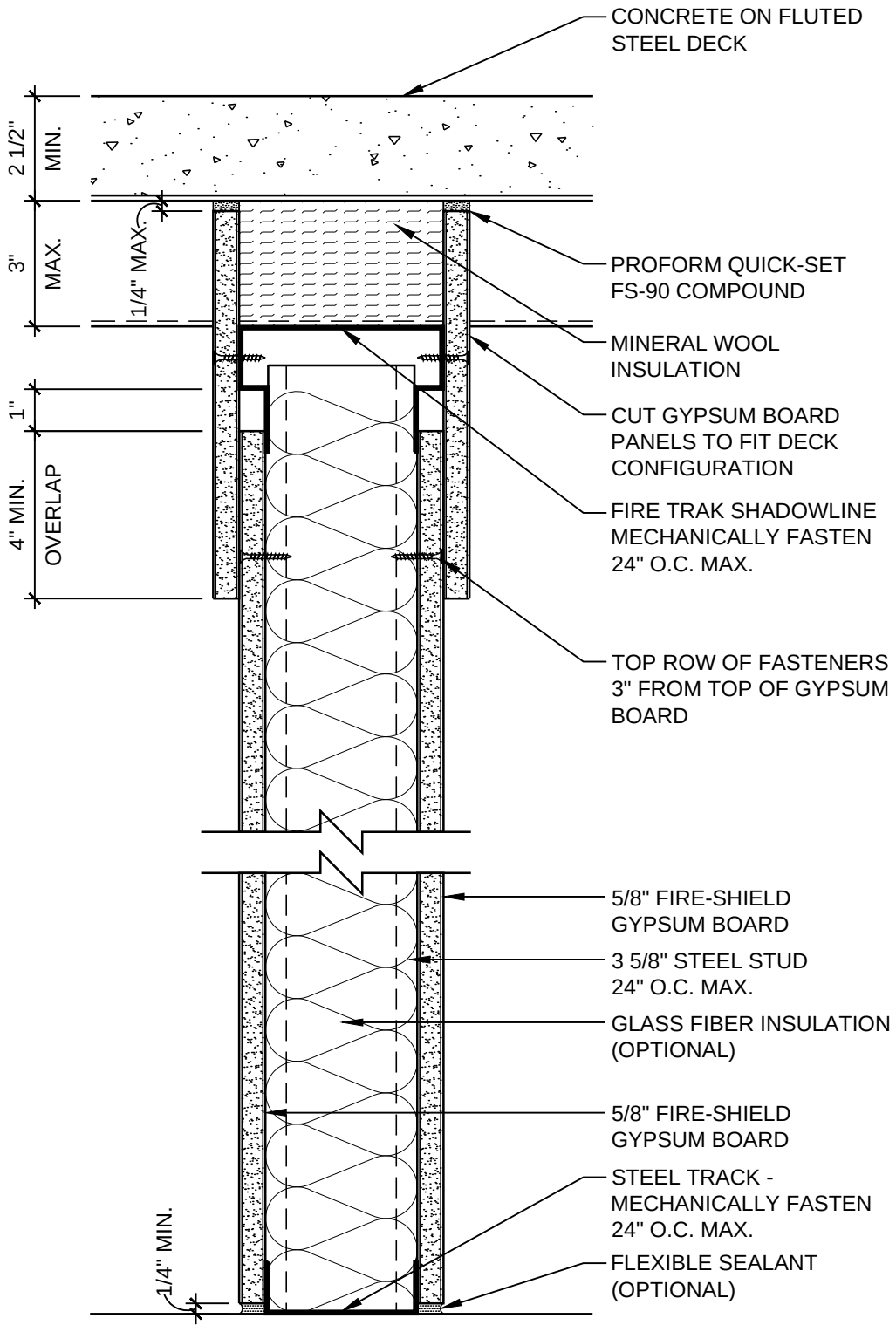

DATE: 11/05/13	1 HOUR PARTITION WITH DEFLECTION TRACK	National Gypsum
SCALE: 3"=1'-0"	DETAIL: SS 107	

© National Gypsum Properties, LLC

HEAD OF WALL - 1 HR
UL DESIGN: HW-D-0252
UL DESIGN: HW-D-0259

PARTITION - 1 HR
UL DESIGN: U465
UL DESIGN: V438

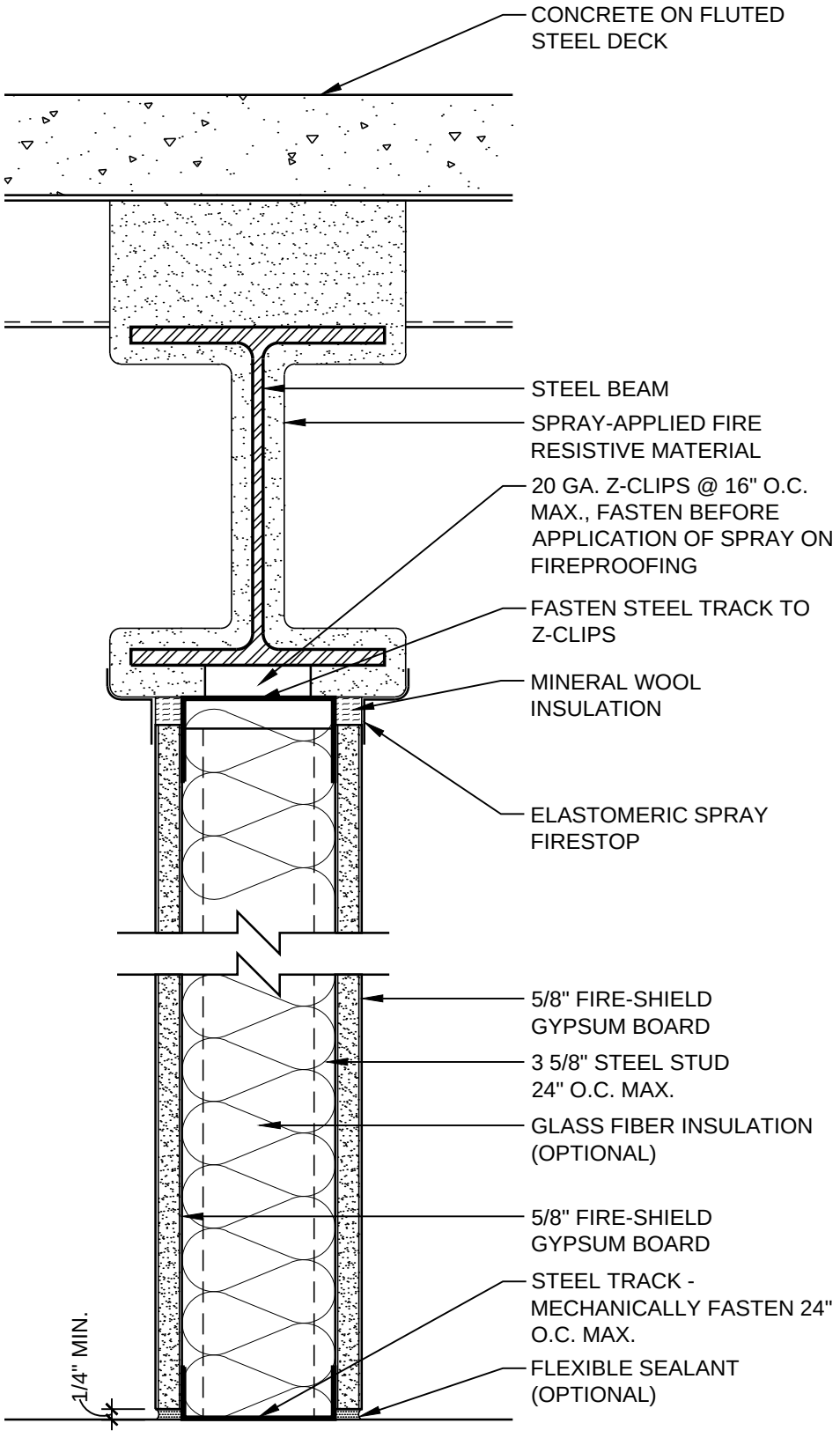

DATE: 11/05/13	1 HOUR PARTITION TO STEEL BEAM	National Gypsum
SCALE: 3"=1'-0"	DETAIL: SS 108	

© National Gypsum Properties, LLC

HEAD OF WALL - 1 HR
UL DESIGN: HW-D-0617
UL DESIGN: HW-D-0635

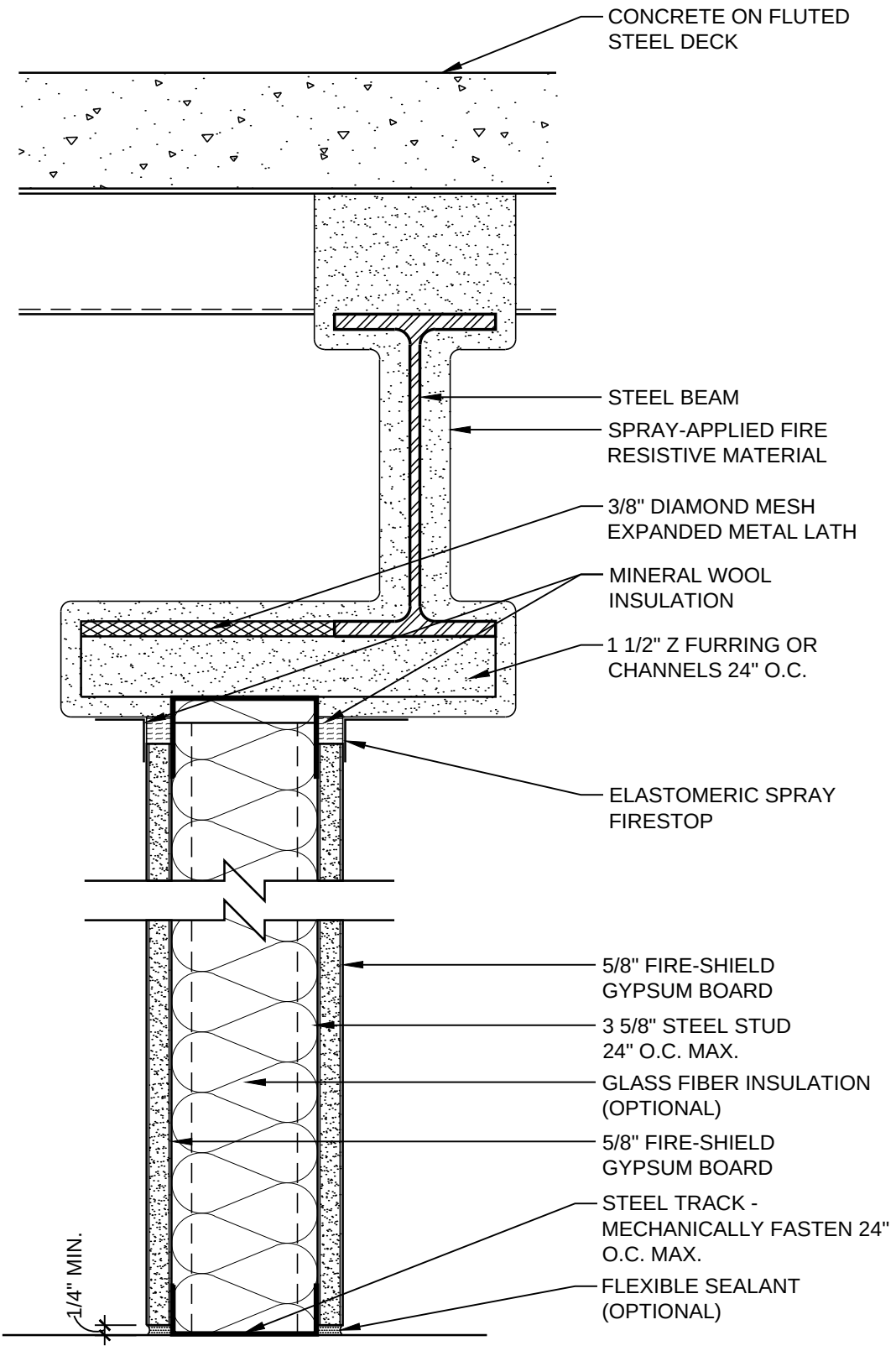

PARTITION - 1 HR
UL DESIGN: U465
UL DESIGN: V438

DATE: 11/05/13	1 HOUR PARTITION OFFSET FROM BEAM	National Gypsum
SCALE: 3"=1'-0"	DETAIL: SS 109	

© National Gypsum Properties, LLC

HEAD OF WALL - 1 HR
UL DESIGN: HW-D-0079
UL DESIGN: HW-D-0083

PARTITION - 1HR
UL DESIGN: U465
UL DESIGN: V438

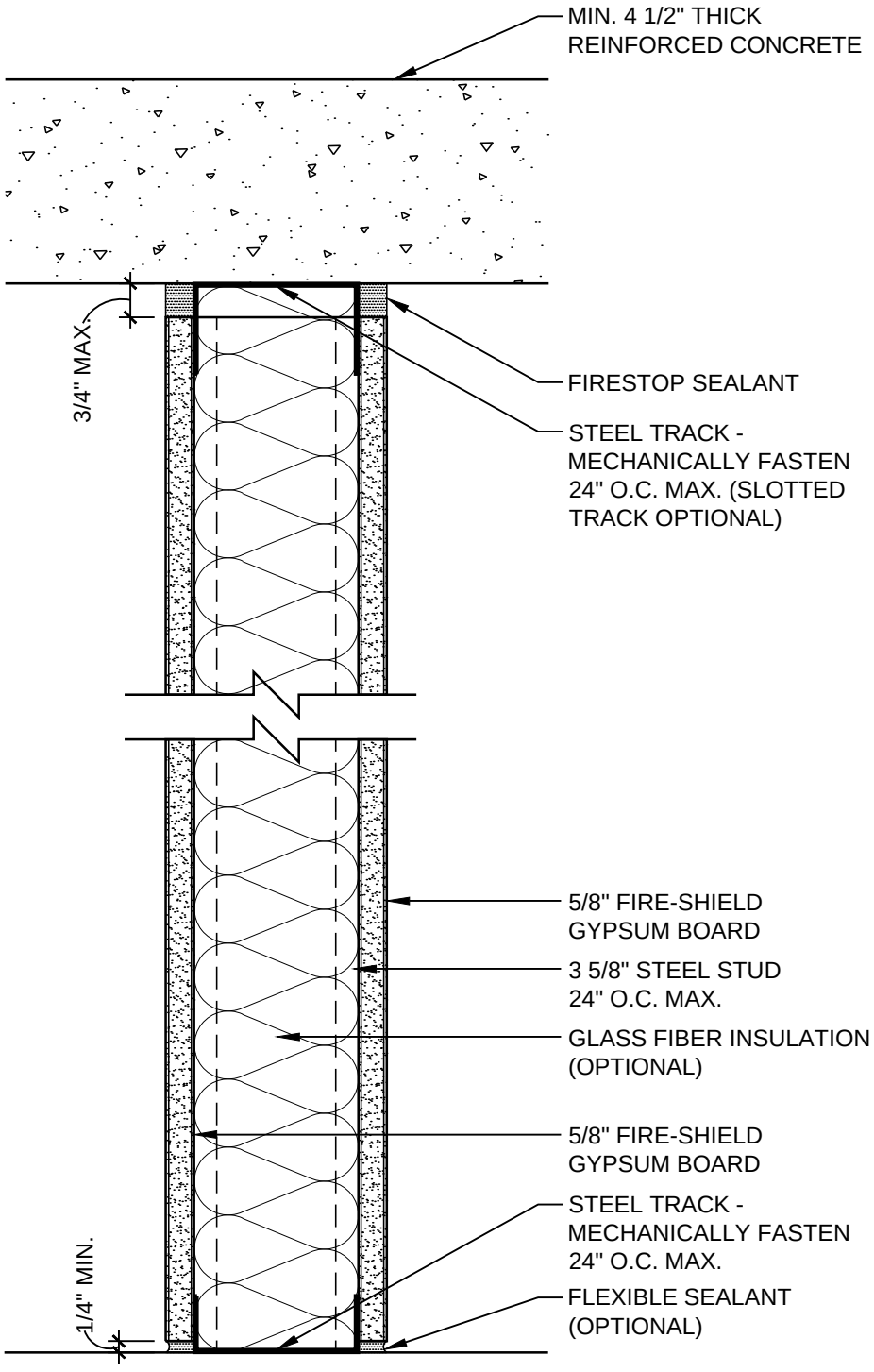

DATE: 11/05/13	1 HOUR PARTITION TO CONCRETE SLAB	National Gypsum
SCALE: 3"=1'-0"	DETAIL: SS 110	

© National Gypsum Properties, LLC

HEAD OF WALL - 1 HR
WHI-495-PSV-1325

PARTITION - 1 HR
UL DESIGN: V497

PARTITION RATED
FROM BOTH SIDES

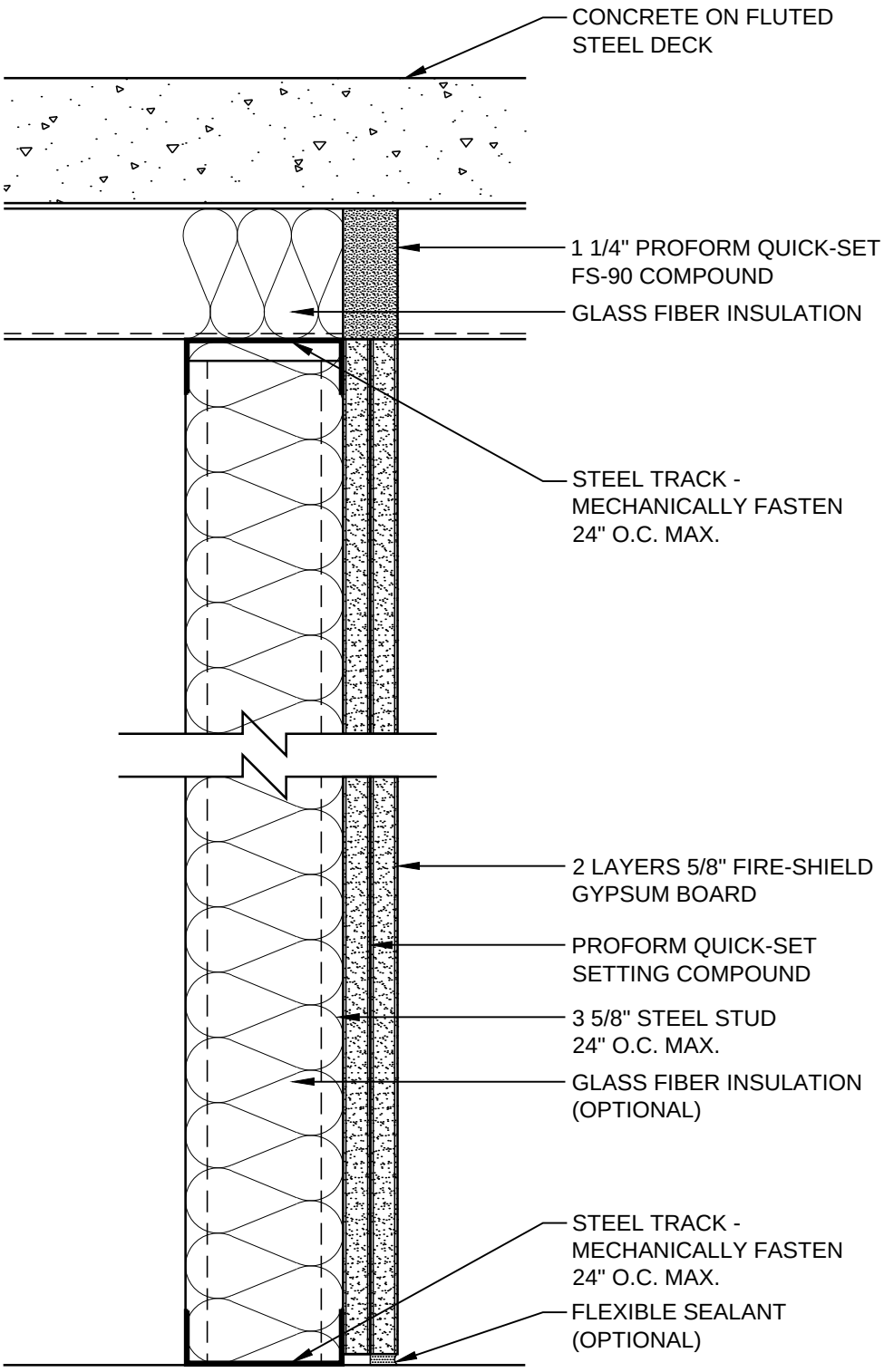

DATE: 11/05/13	1 HOUR 1 SIDED PARTITION TO STEEL DECK	National Gypsum
SCALE: 3"=1'-0"	DETAIL: SS 111	

© National Gypsum Properties, LLC

HEAD OF WALL - 1 HR
WHI 495-PSV-1067

PARTITION - 1 HR
UL DESIGN: V488

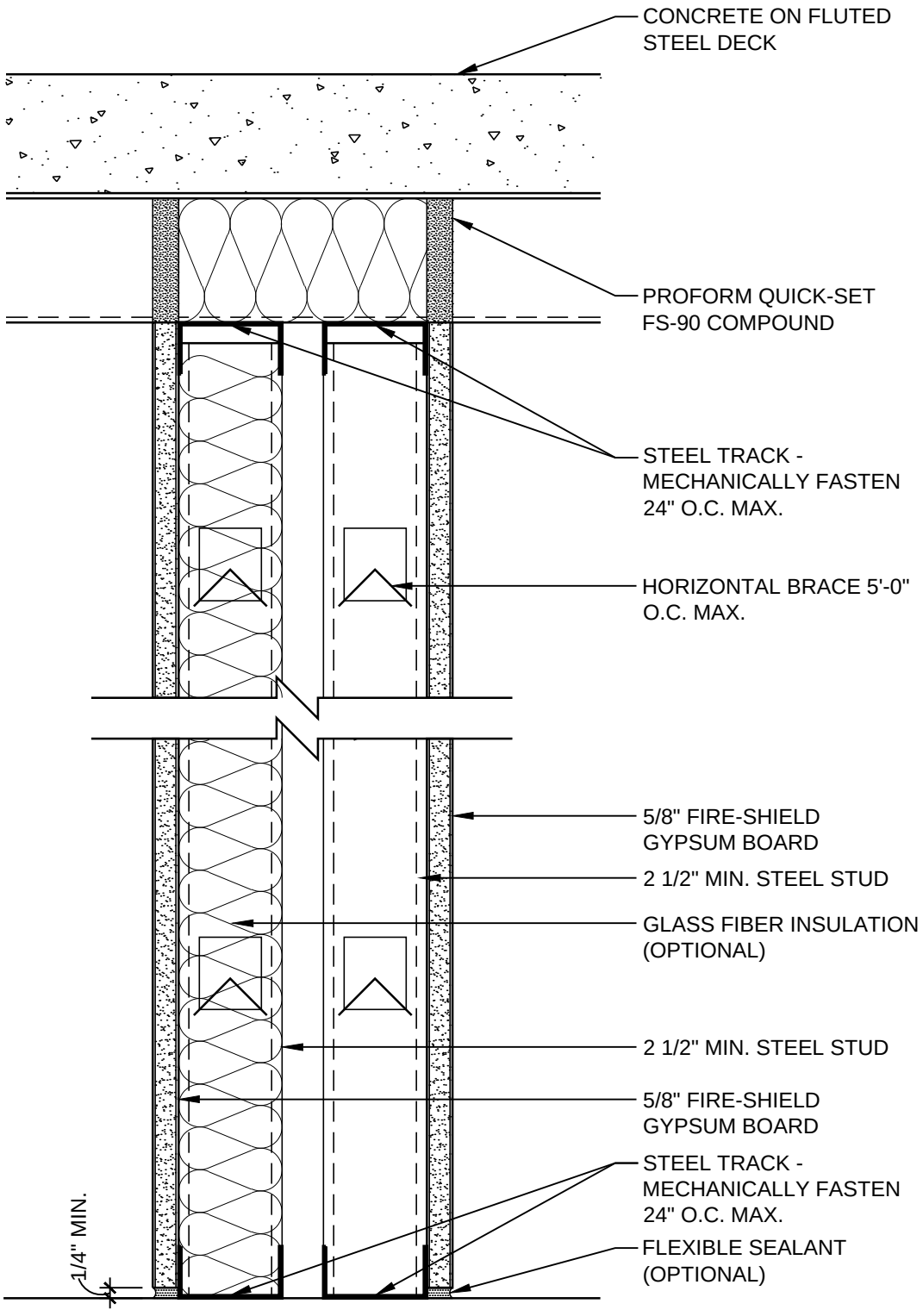

DATE: 11/05/13	1 HOUR CHASE WALL TO STEEL DECK	National Gypsum
SCALE: 3"=1'-0"	DETAIL: SS 112	

© National Gypsum Properties, LLC

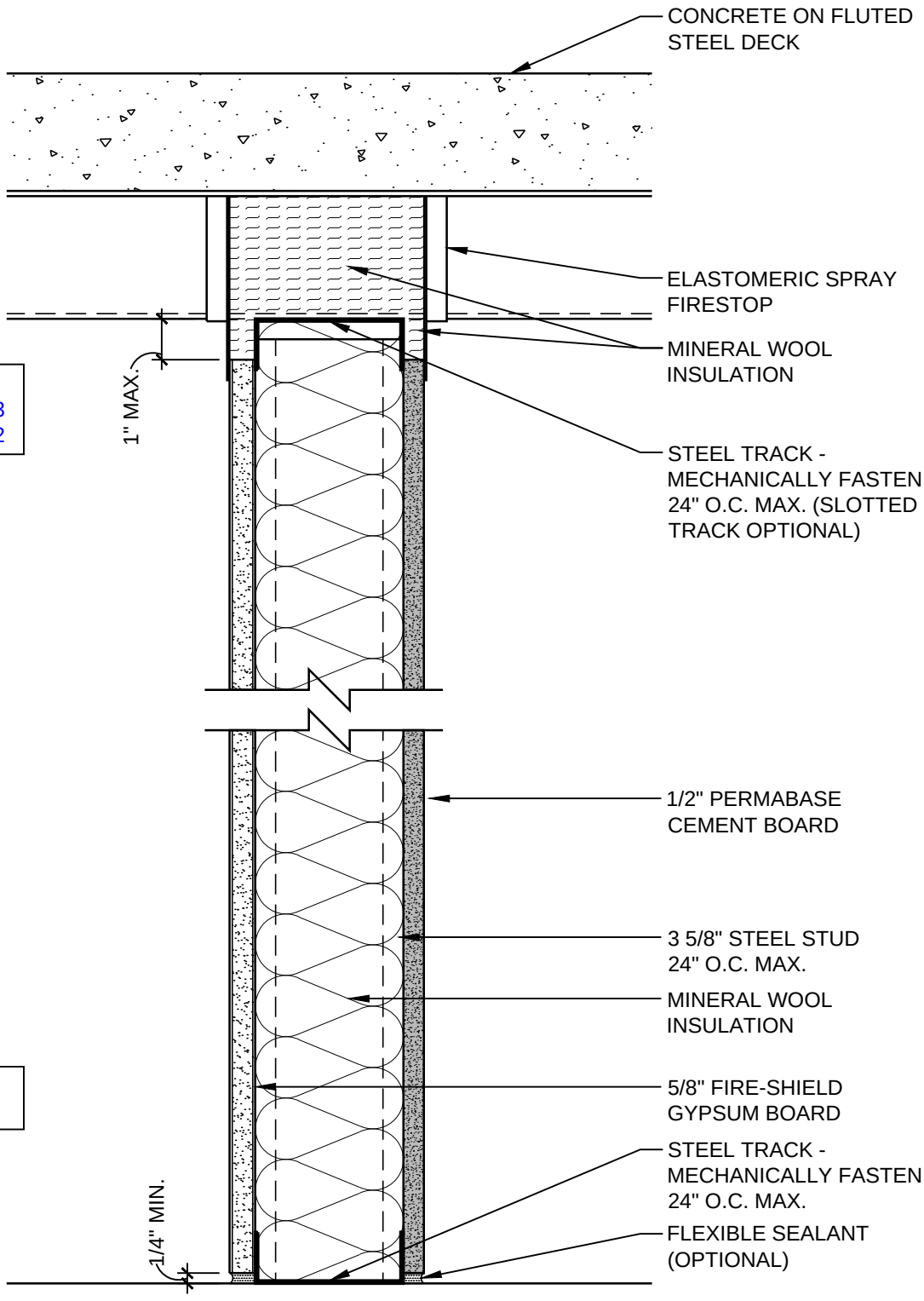

HEAD OF WALL - 1 HR
UL DESIGN: HW-D-0043
UL DESIGN: HW-D-0292

PARTITION - 1 HR
UL DESIGN: V452

DATE: 11/05/13	1 HOUR CEMENT BOARD PARTITION TO STEEL DECK	National Gypsum
SCALE: 3"=1'-0"	DETAIL: SS 113	

© National Gypsum Properties, LLC

HEAD OF WALL - 2 HR
WHI 495-PSV-1068

PARTITION - 2 HR
UL DESIGN: U411
UL DESIGN: V438

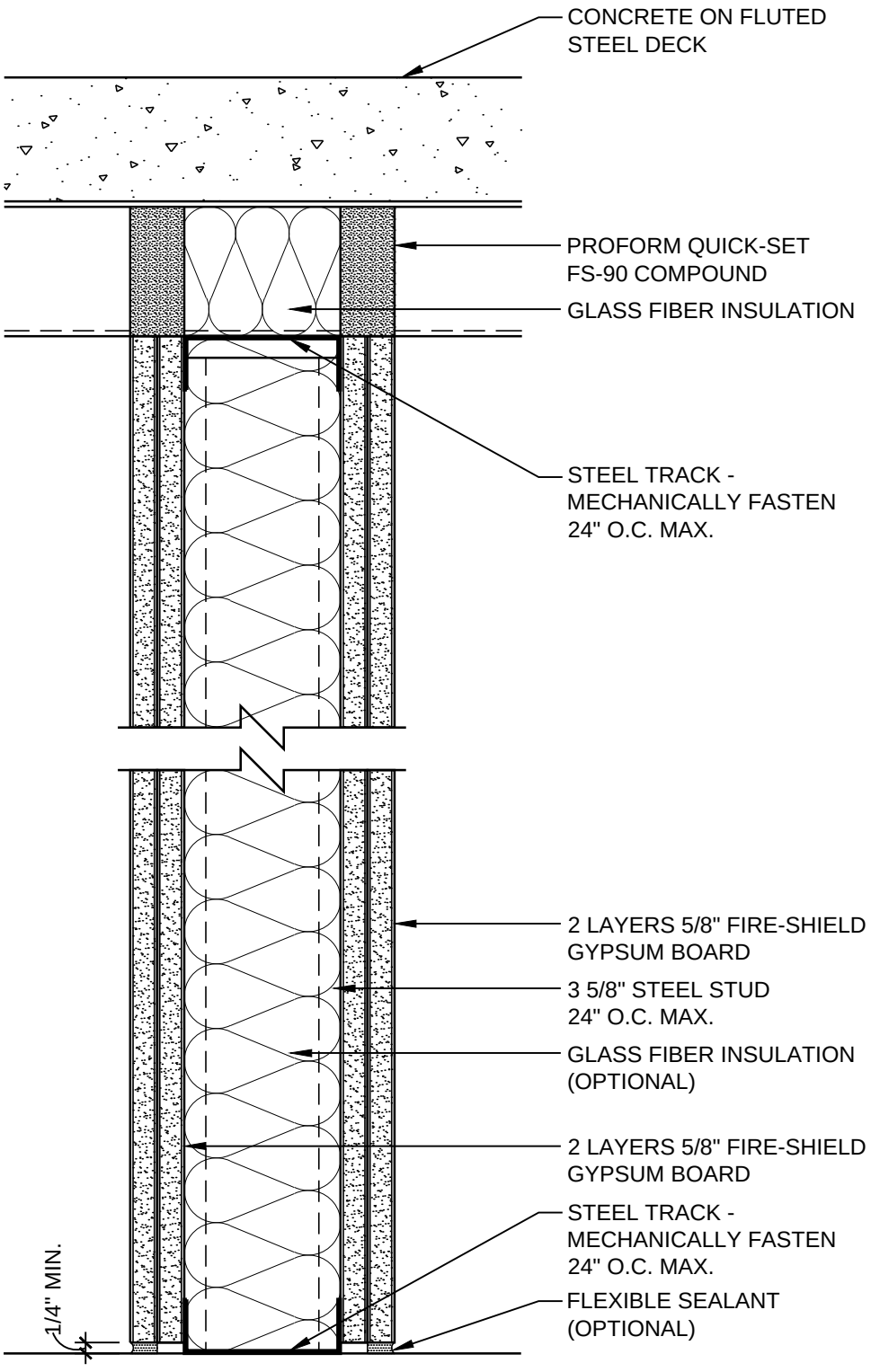

DATE: 11/05/13	2 HOUR PARTITION TO STEEL DECK	National Gypsum
SCALE: 3"=1'-0"	DETAIL: SS 201	

© National Gypsum Properties, LLC

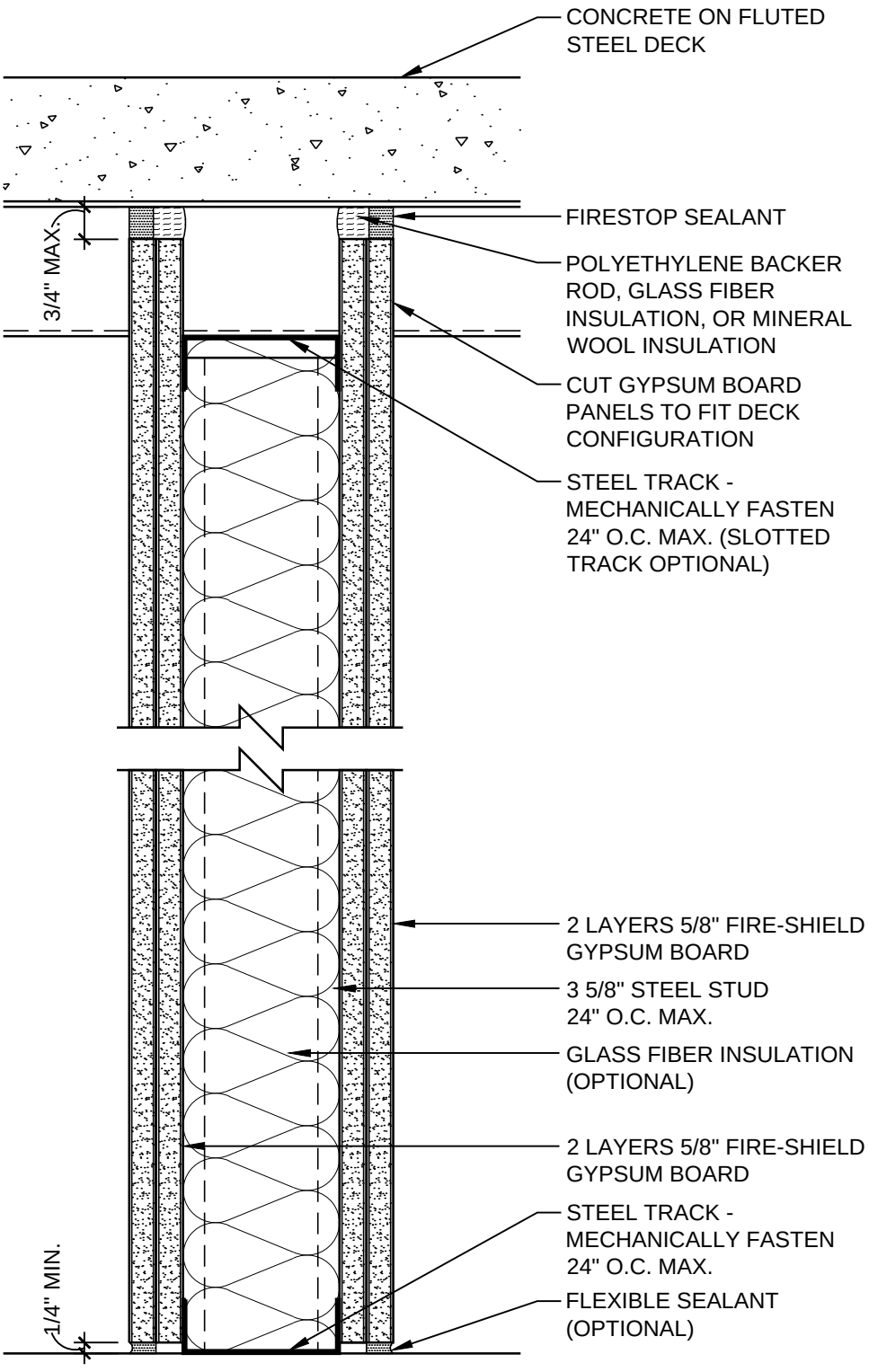

HEAD OF WALL - 2 HR
UL DESIGN: HW-D-0103
UL DESIGN: HW-D-0076

PARTITION - 2 HR
UL DESIGN: U411
UL DESIGN: V438

DATE: 11/05/13	2 HOUR PARTITION TO STEEL DECK	National Gypsum
SCALE: 3"=1'-0"	DETAIL: SS 202	

© National Gypsum Properties, LLC

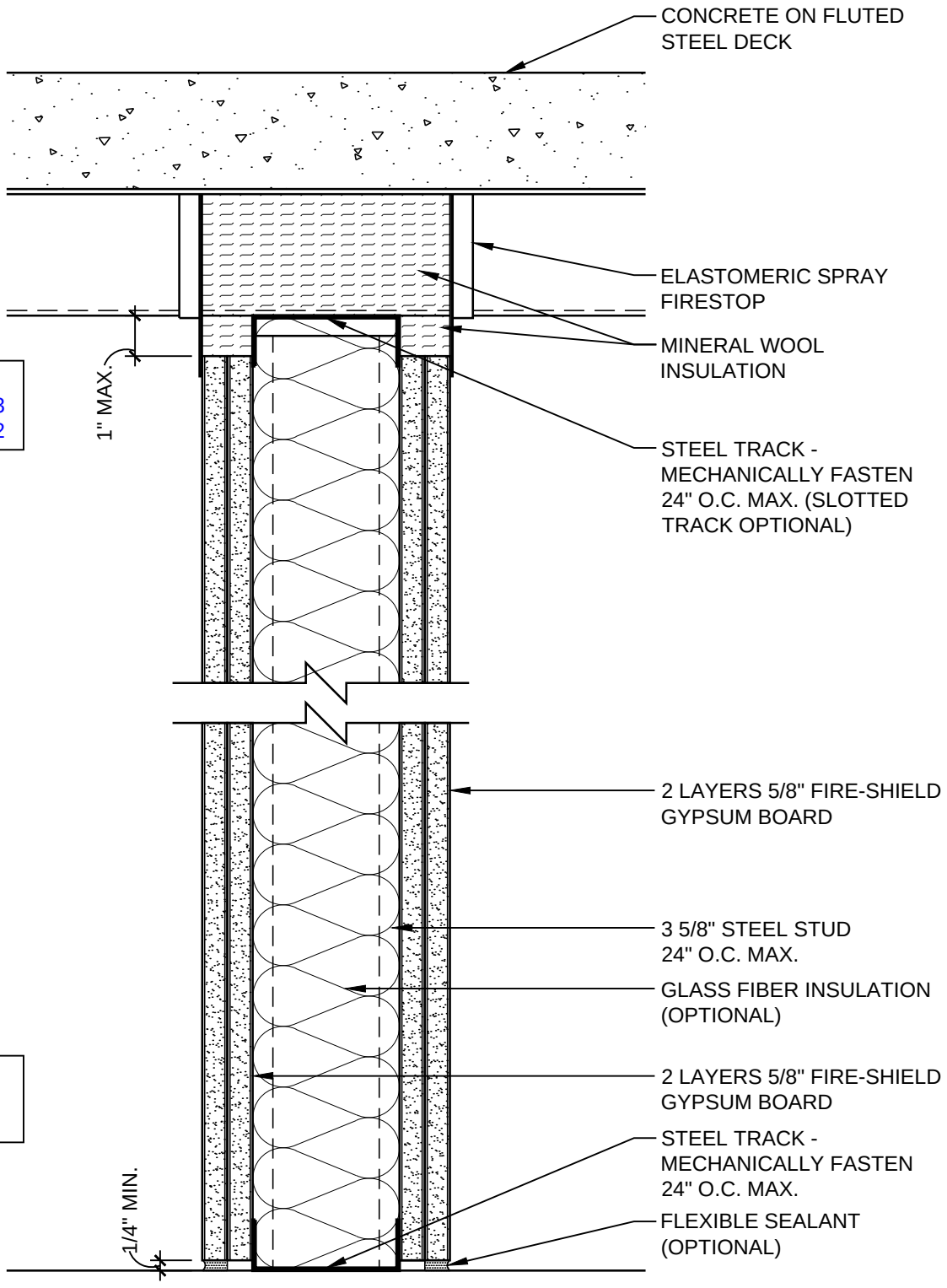

DATE: 11/05/13	2 HOUR PARTITION TO STEEL DECK	National Gypsum
SCALE: 3"=1'-0"	DETAIL: SS 203	

© National Gypsum Properties, LLC

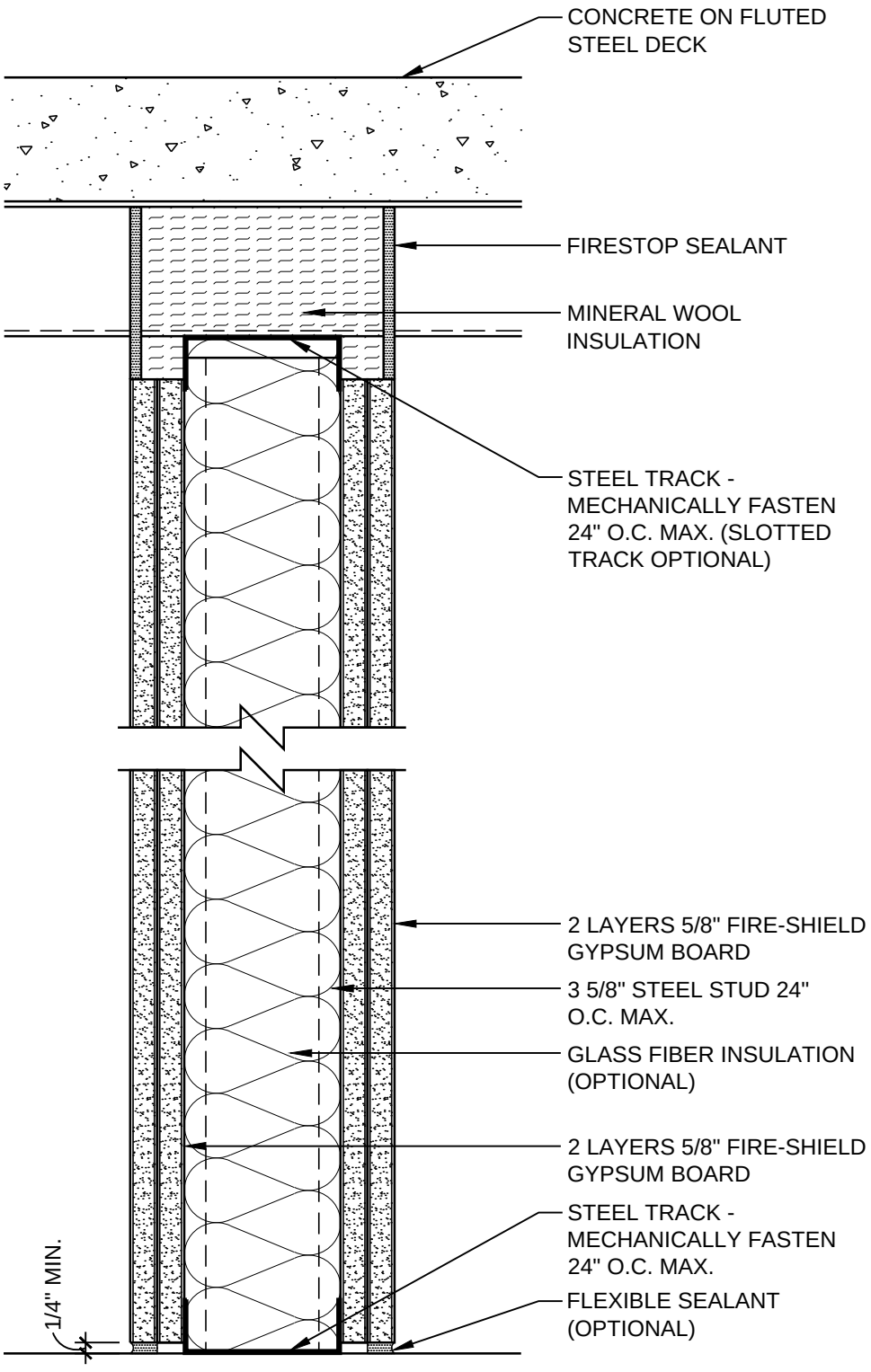

HEAD OF WALL - 2 HR
UL DESIGN: HW-D-0034
UL DESIGN: HW-D-0045

PARTITION - 2 HR
UL DESIGN: U411
UL DESIGN: V438

DATE: 11/05/13	2 HOUR PARTITION TO STEEL DECK	National Gypsum
SCALE: 3"=1'-0"	DETAIL: SS 204	

© National Gypsum Properties, LLC

HEAD OF WALL - 2 HR
UL DESIGN: HW-D-0034
UL DESIGN: HW-D-0045

PARTITION - 2 HR
UL DESIGN: U411
UL DESIGN: V438

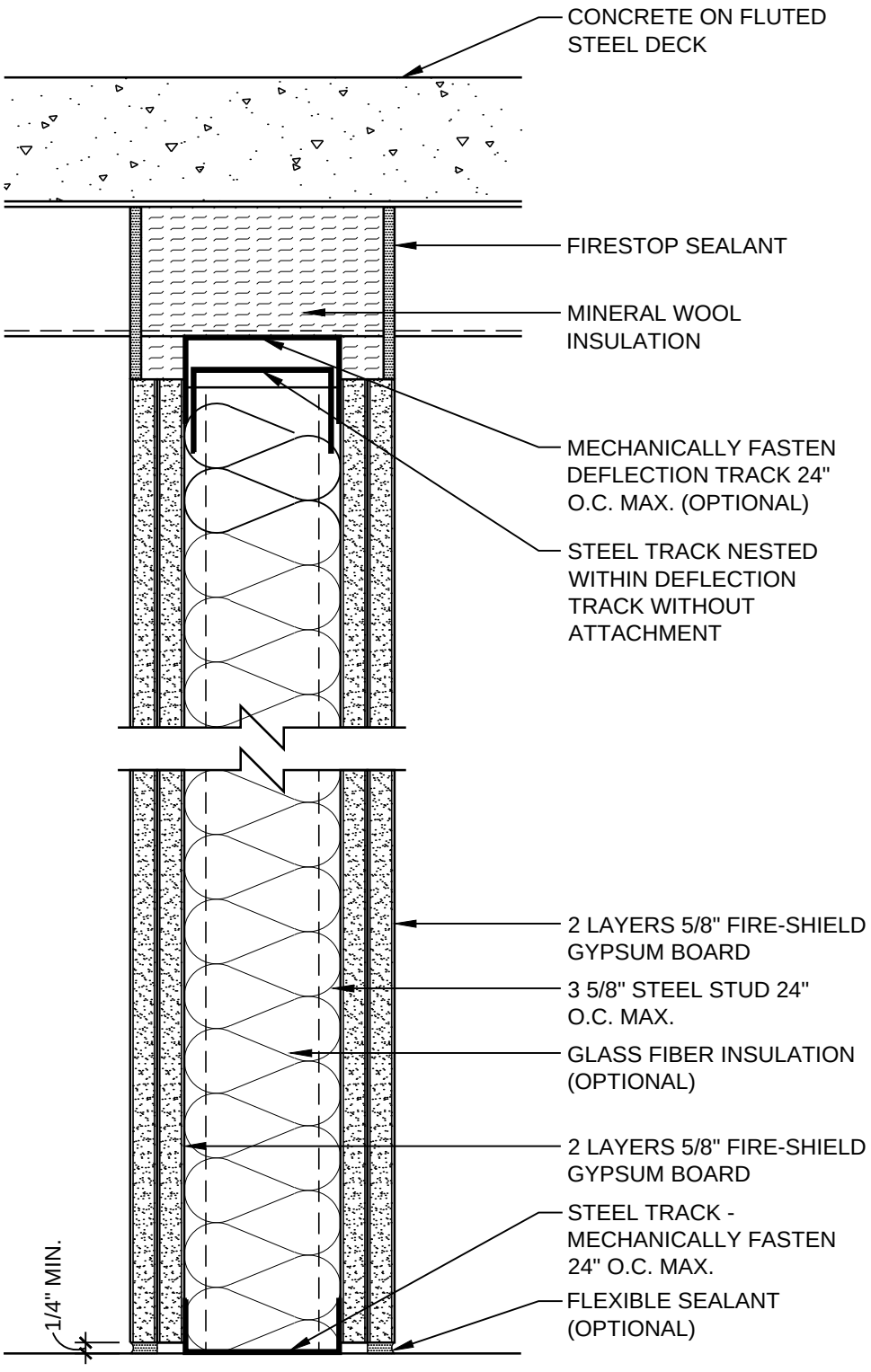

DATE: 11/05/13	2 HOUR PARTITION WITH DEFLECTION TRACK	National Gypsum
SCALE: 3"=1'-0"	DETAIL: SS 205	

© National Gypsum Properties, LLC

HEAD OF WALL - 2 HR
UL DESIGN: HW-D-0363

PARTITION - 2 HR
UL DESIGN: U411
UL DESIGN: V438

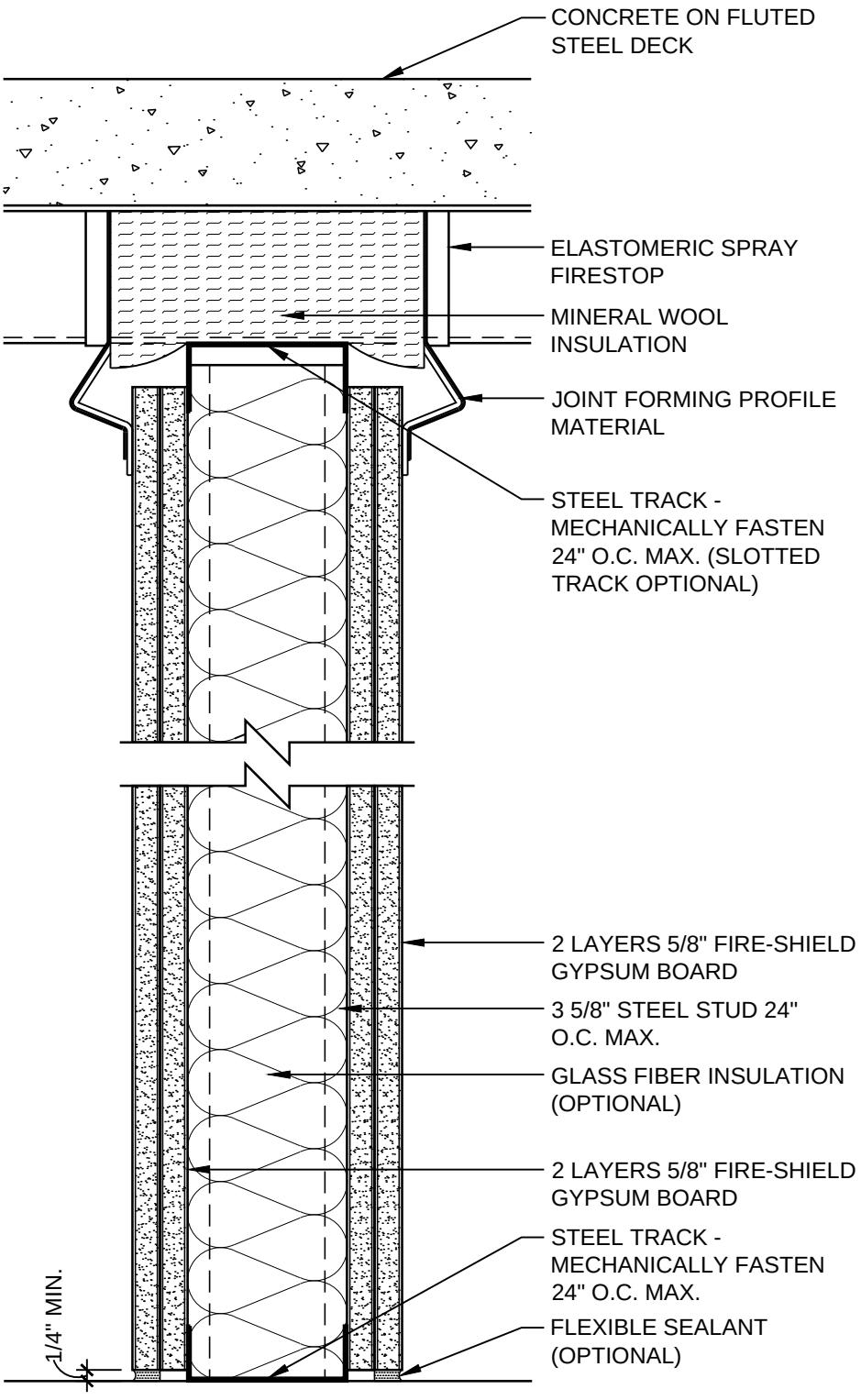

DATE: 11/05/13	2 HOUR PARTITION TO STEEL DECK	National Gypsum
SCALE: 3"=1'-0"	DETAIL: SS 206	

© National Gypsum Properties, LLC

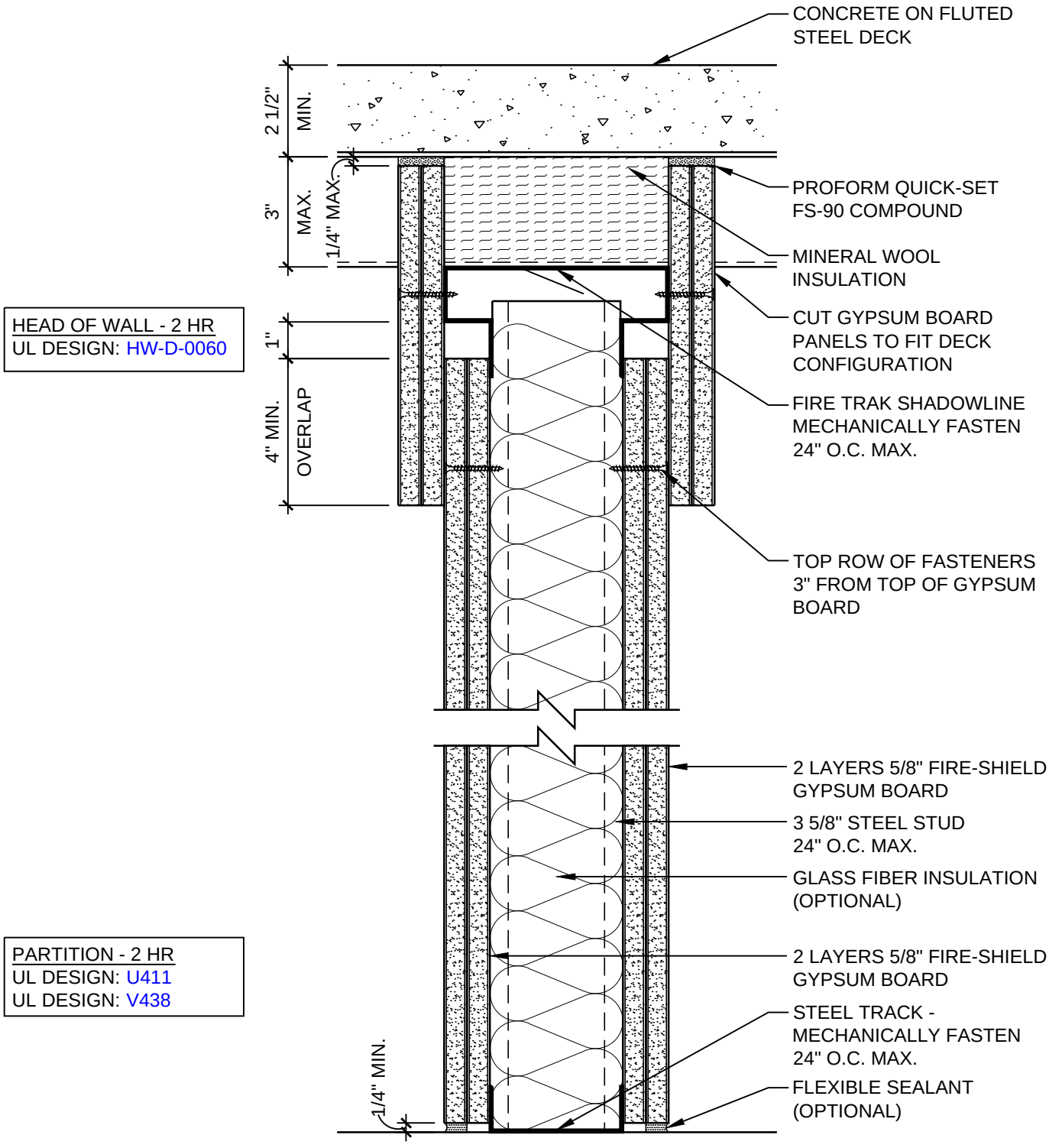

DATE: 11/05/13	2 HOUR PARTITION WITH DEFLECTION TRACK	National Gypsum
SCALE: 3"=1'-0"	DETAIL: SS 207	

© National Gypsum Properties, LLC

HEAD OF WALL - 2 HR
UL DESIGN: HW-D-0252
UL DESIGN: HW-D-0259

PARTITION - 2 HR
UL DESIGN: U411
UL DESIGN: V438

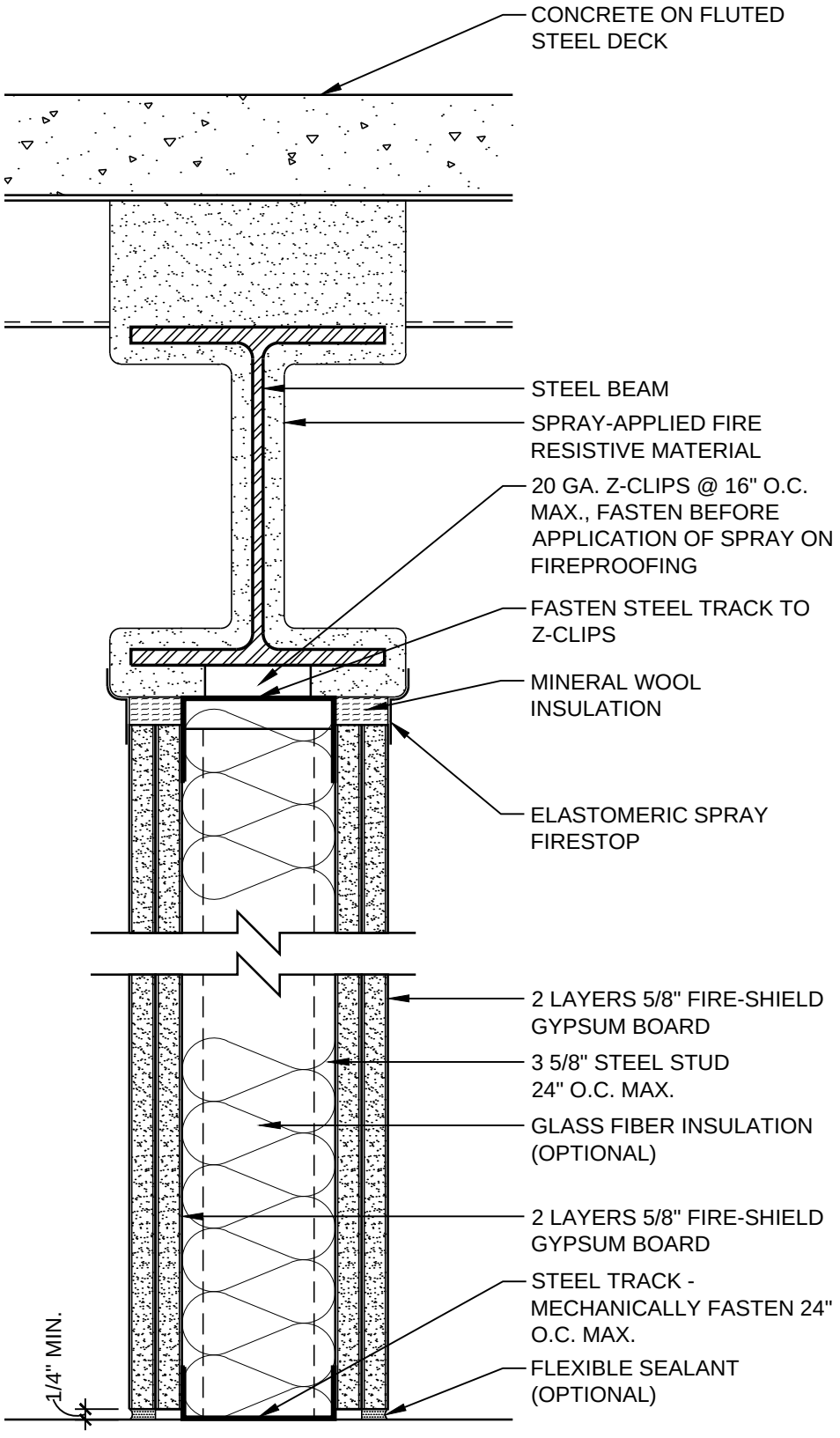

DATE: 11/05/13	2 HOUR PARTITION TO STEEL BEAM	National Gypsum
SCALE: 3"=1'-0"	DETAIL: SS 208	

© National Gypsum Properties, LLC

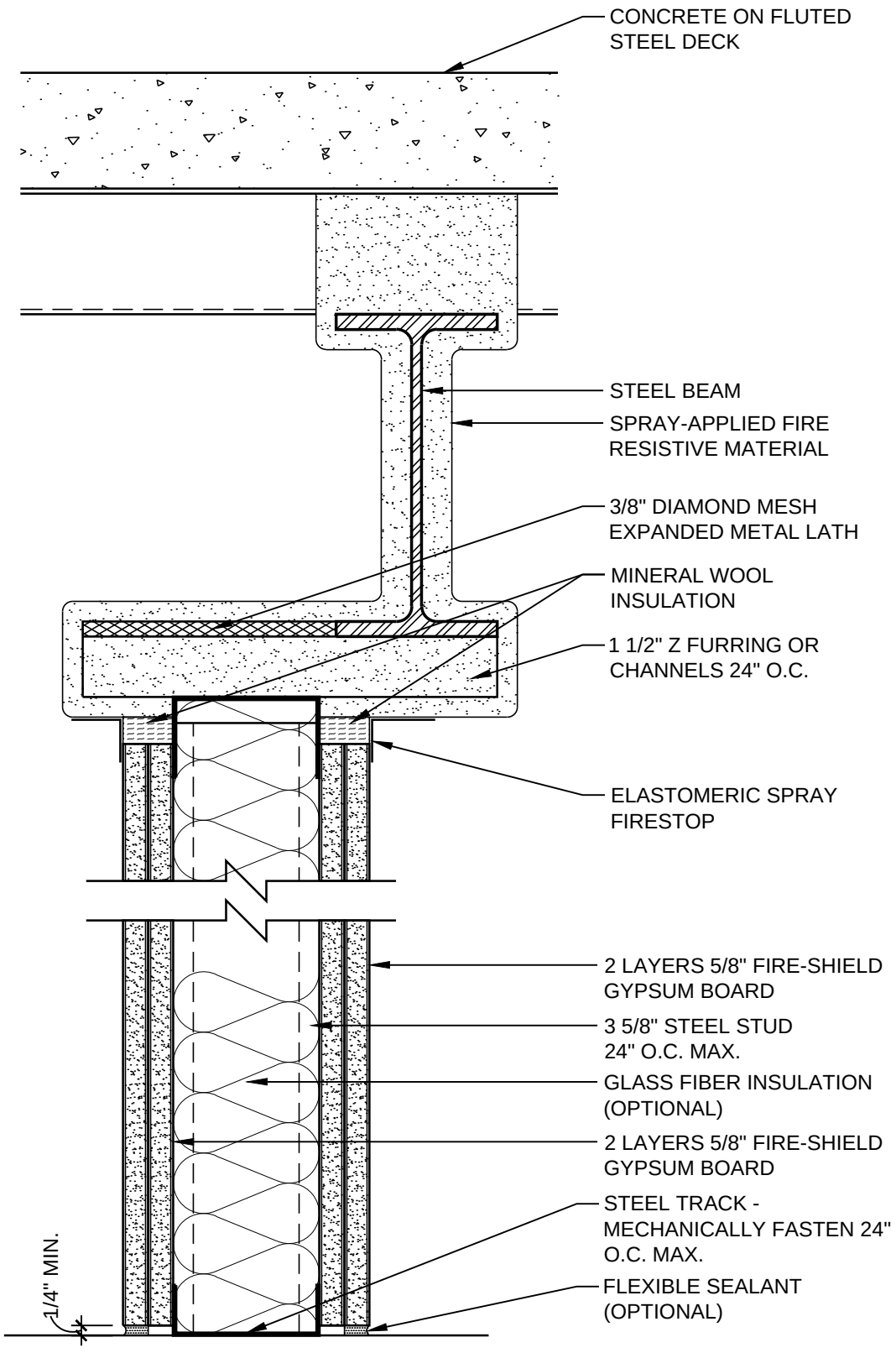

HEAD OF WALL - 2 HR
UL DESIGN: HW-D-0617
UL DESIGN: HW-D-0635

PARTITION - 2 HR
UL DESIGN: U411
UL DESIGN: V438

DATE: 11/05/13	2 HOUR PARTITION OFFSET FROM BEAM	National Gypsum
SCALE: 3"=1'-0"	DETAIL: SS 209	

© National Gypsum Properties, LLC

HEAD OF WALL - 2 HR
UL DESIGN: HW-D-0079
UL DESIGN: HW-D-0083

PARTITION - 2 HR
UL DESIGN: U411
UL DESIGN: V438

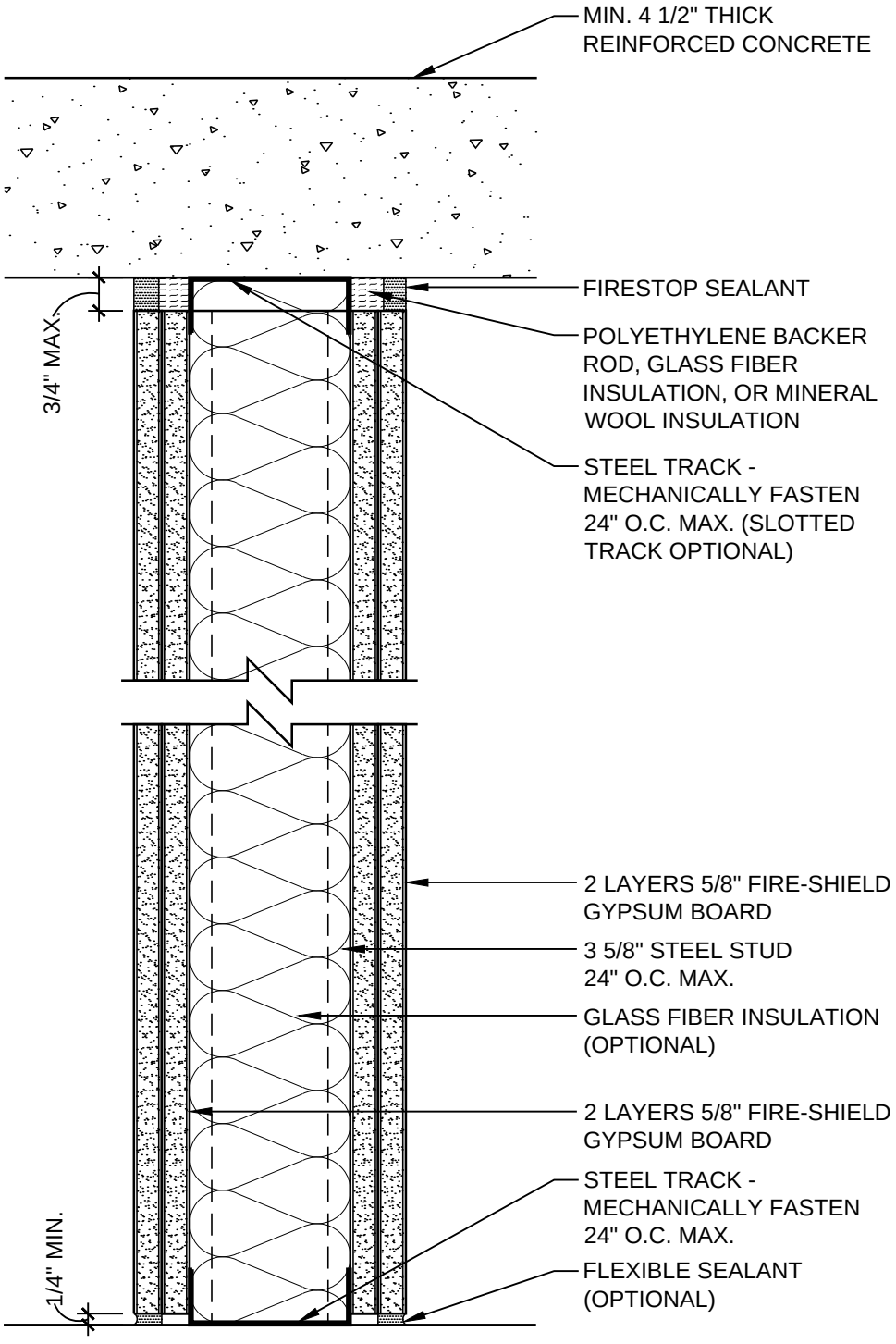

DATE: 11/05/13	2 HOUR PARTITION TO CONCRETE SLAB	National Gypsum
SCALE: 3"=1'-0"	DETAIL: SS 210	

© National Gypsum Properties, LLC

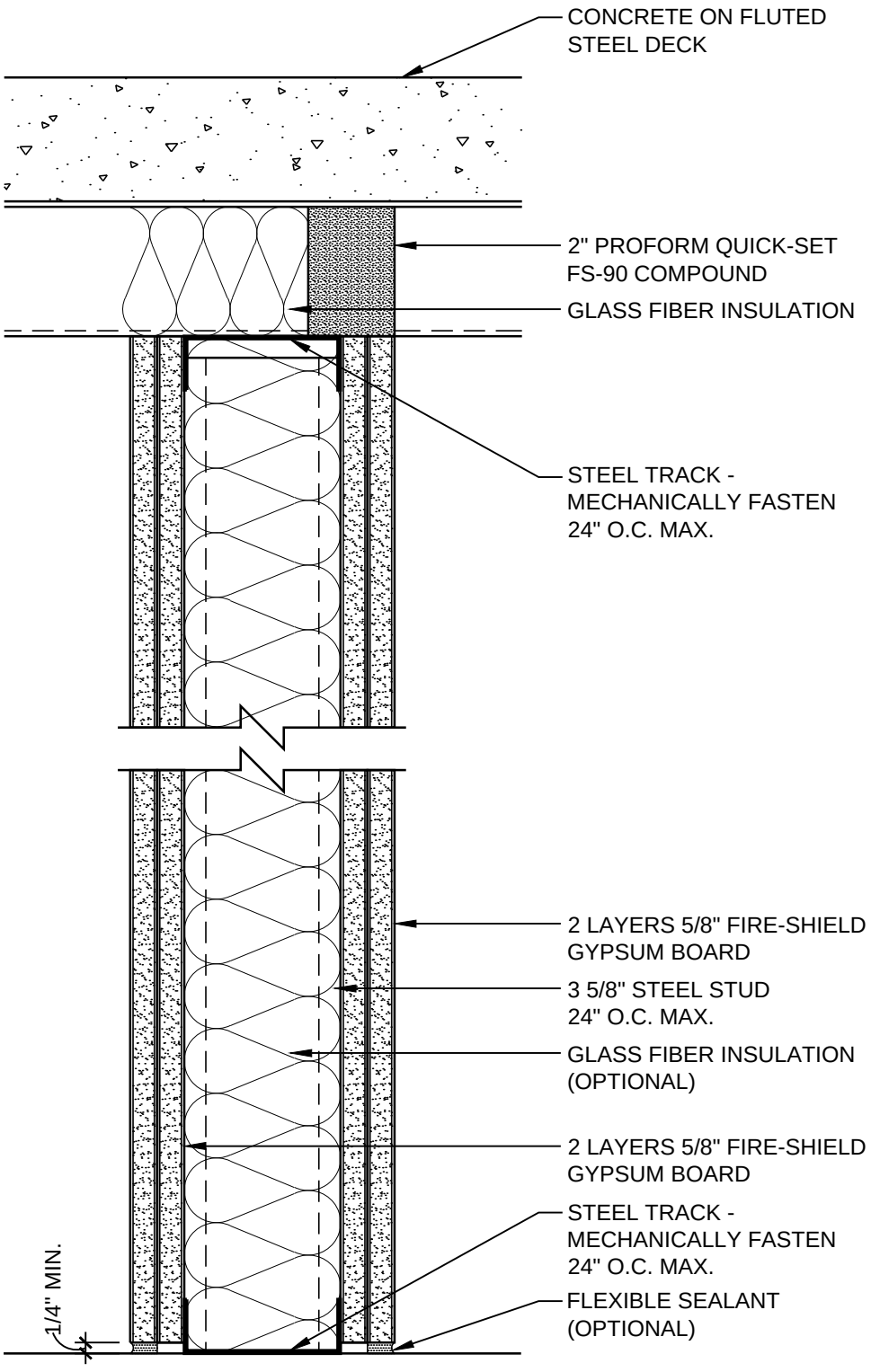

HEAD OF WALL - 2 HR
WHI-495-PSV-1326

HEAD OF WALL RATED FROM BOTH SIDES

PARTITION - 2 HR
UL DESIGN: U411
UL DESIGN: V438

DATE: 11/05/13	2 HOUR PARTITION TO STEEL DECK	National Gypsum
SCALE: 3"=1'-0"	DETAIL: SS 211	

© National Gypsum Properties, LLC

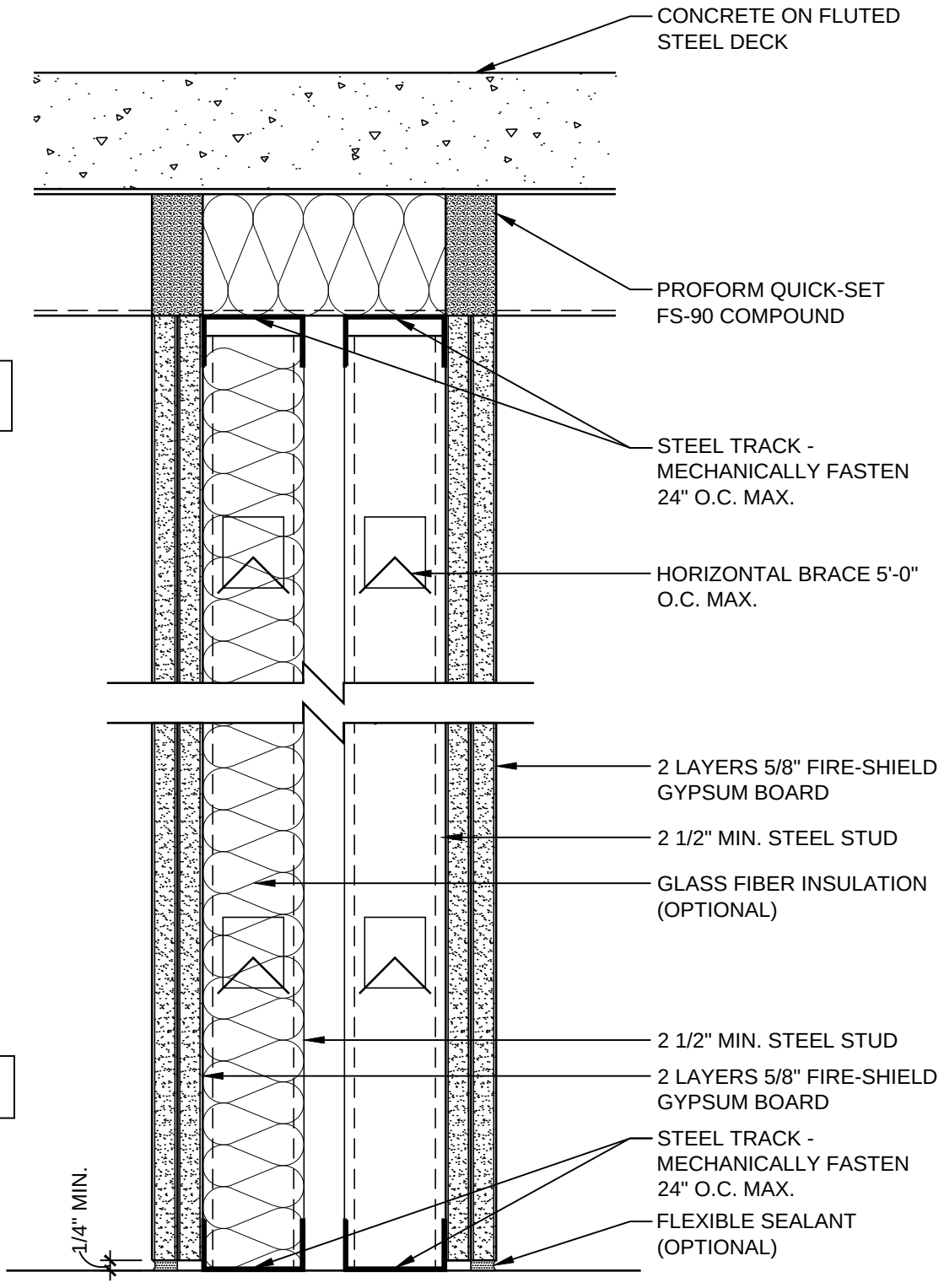

HEAD OF WALL - 2 HR
WHI 495-PSV-1068

PARTITION - 2 HR
UL DESIGN: V488

DATE: 11/05/13	2 HOUR CHASE WALL TO STEEL DECK	National Gypsum
SCALE: 3"=1'-0"	DETAIL: SS 212	

© National Gypsum Properties, LLC

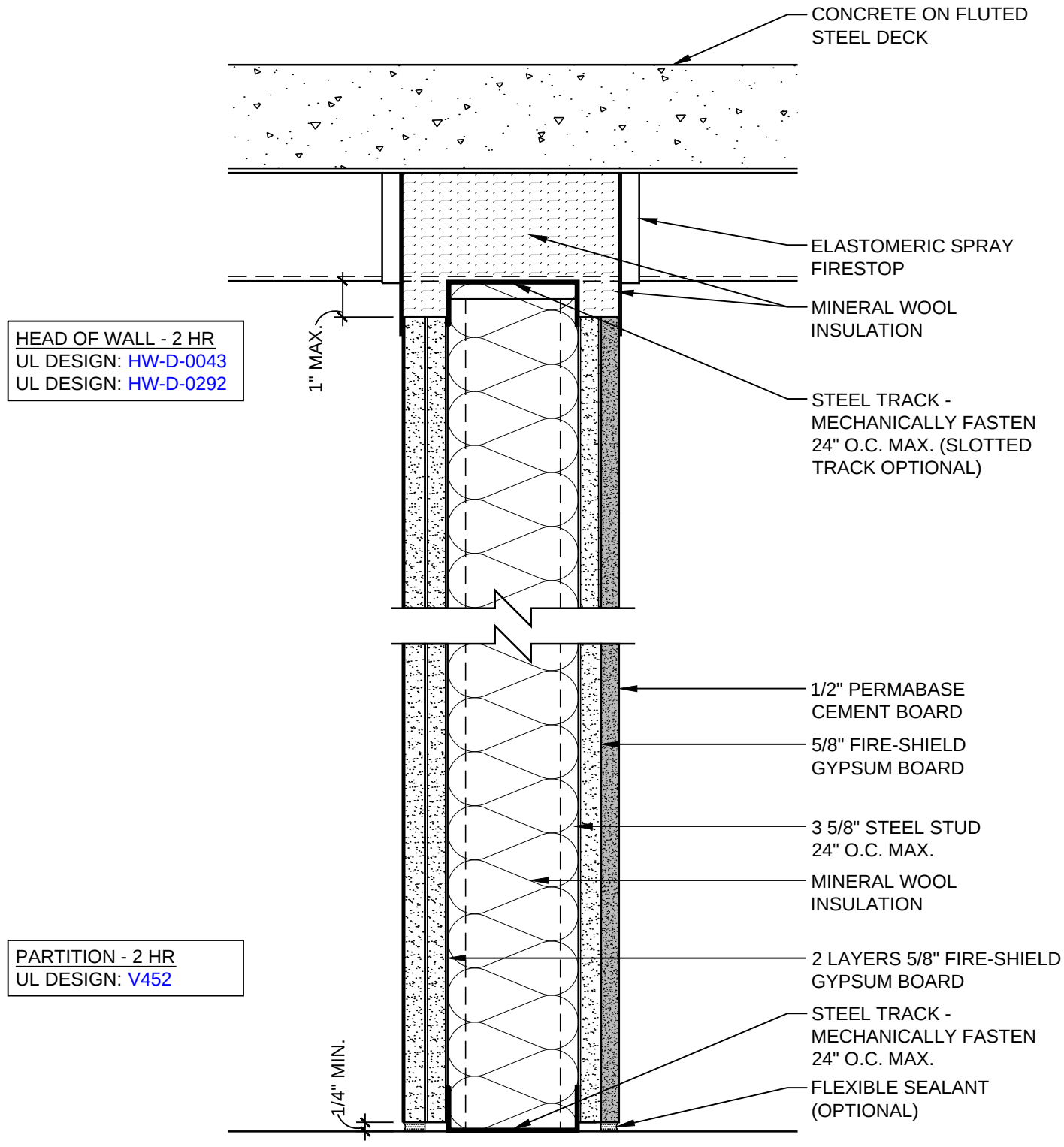

DATE: 11/05/13	2 HOUR CEMENT BOARD PARTITION TO STEEL DECK	National Gypsum
SCALE: 3"=1'-0"	DETAIL: SS 213	

© National Gypsum Properties, LLC

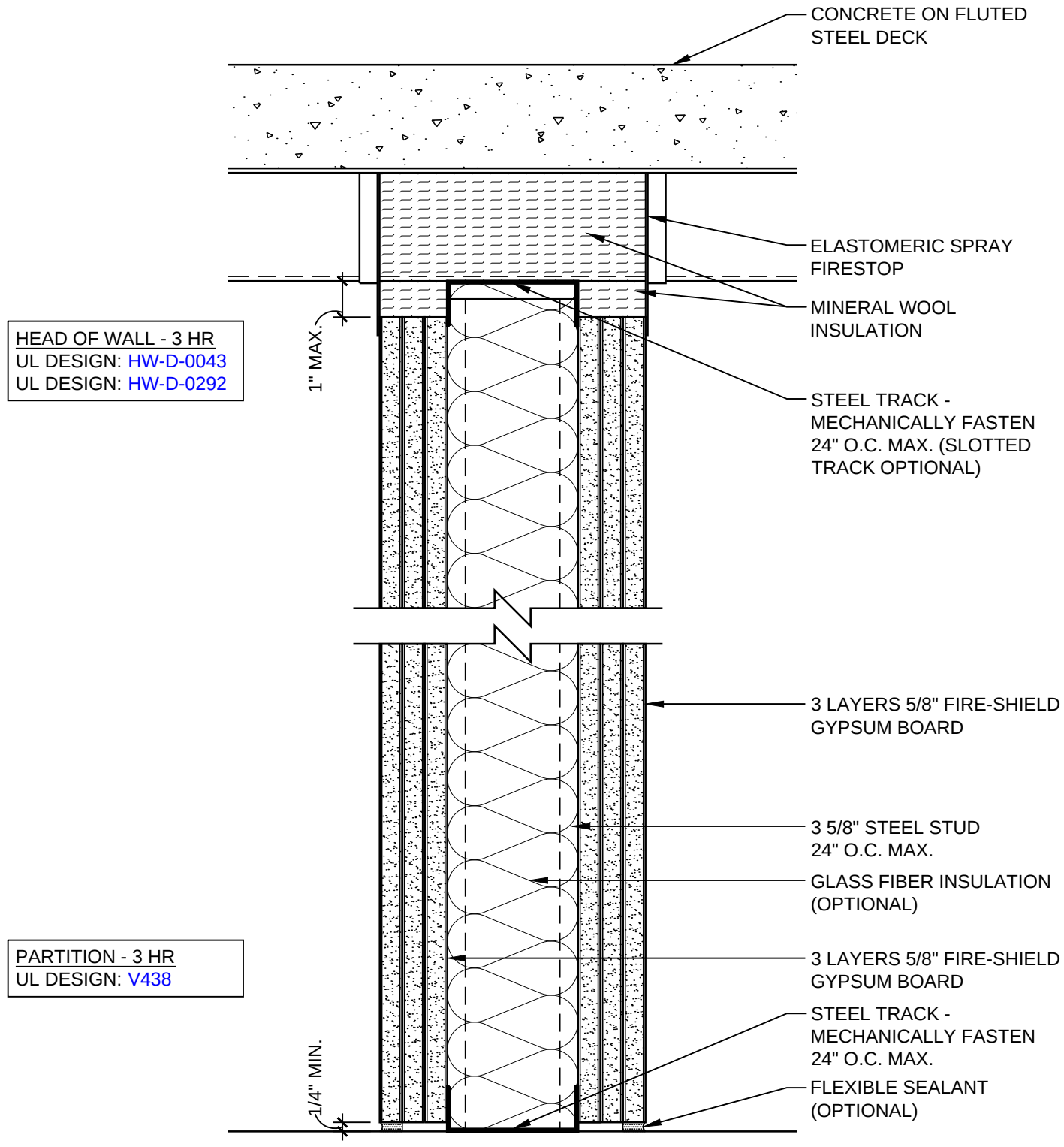

DATE: 11/05/13	3 HOUR PARTITION TO STEEL DECK	National Gypsum
SCALE: 3"=1'-0"	DETAIL: SS 301	

© National Gypsum Properties, LLC

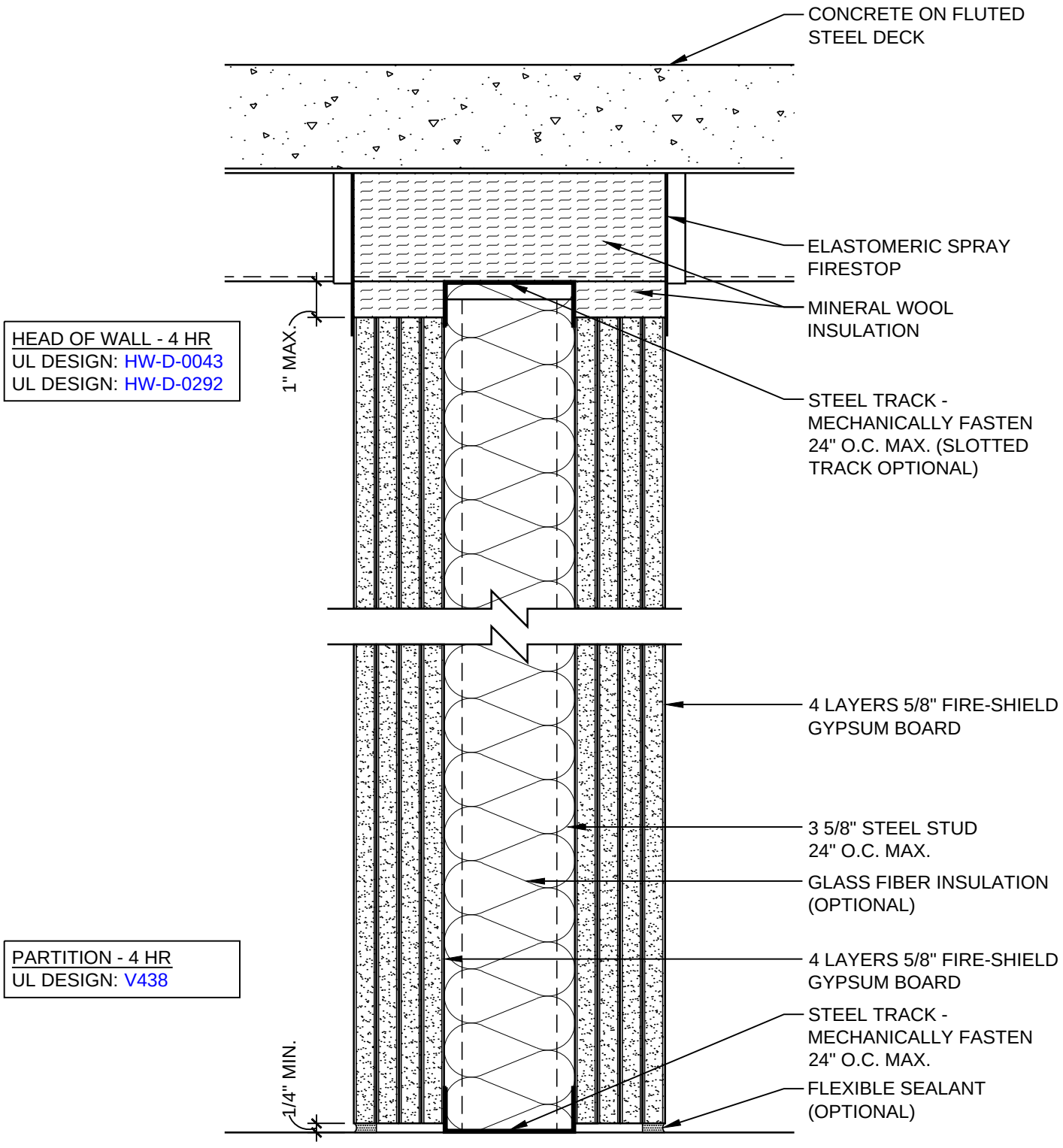

DATE: 11/05/13	4 HOUR PARTITION TO STEEL DECK	National Gypsum
SCALE: 3"=1'-0"	DETAIL: SS 401	

© National Gypsum Properties, LLC

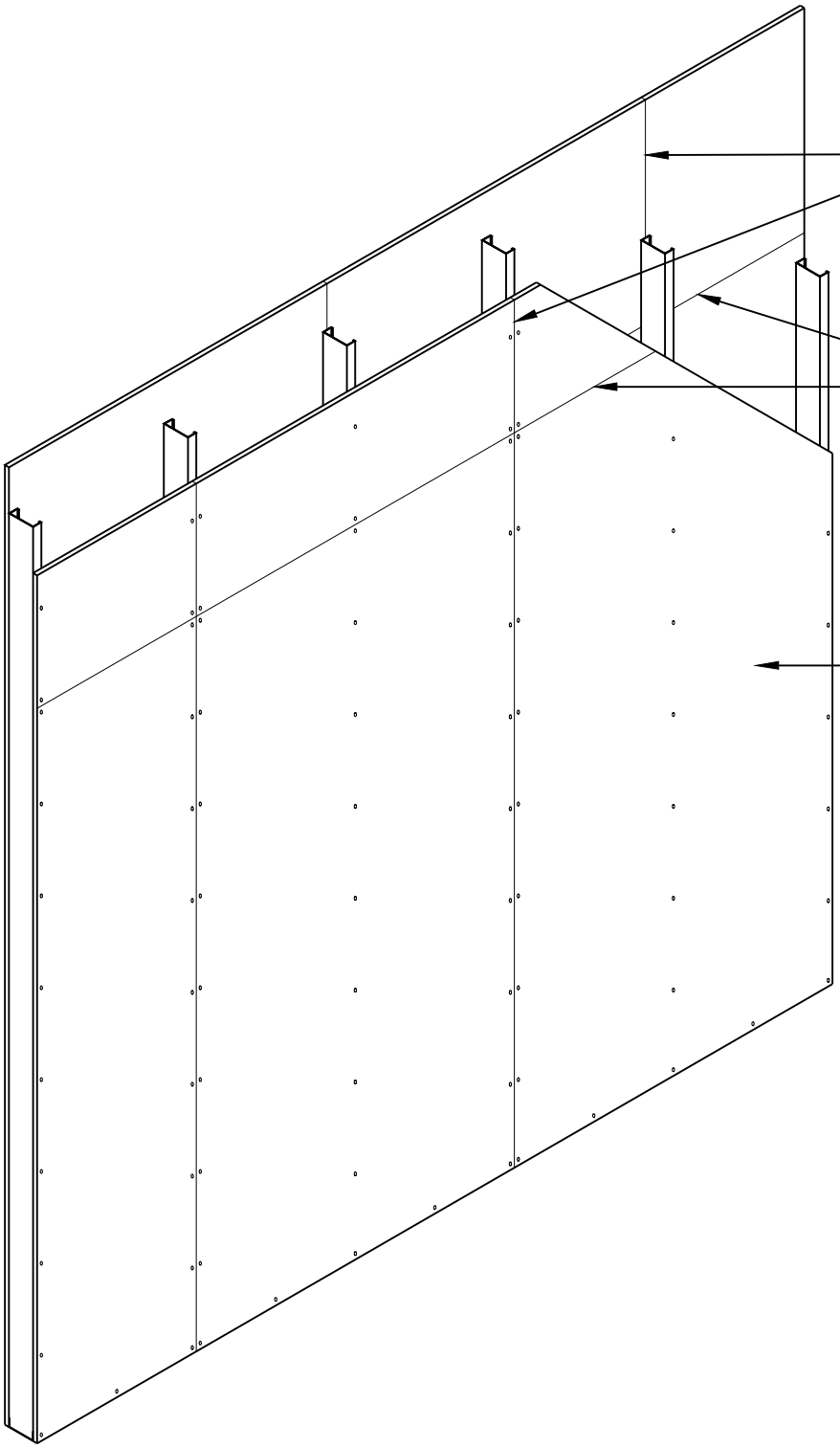

VERTICAL JOINTS STAGGERED ONE STUD CAVITY ON OPPOSITE SIDES OF PARTITION

HORIZONTAL BASE LAYER JOINTS NEED NOT BE STAGGERED OR BACKED BY FRAMING

5/8" FIRE-SHIELD GYPSUM BOARD

PARTITION - 1 HR
UL DESIGN: U465
UL DESIGN: V438

DATE: 11/05/13	1 HR PARTITION JOINT STAGGERING REQUIREMENTS	National Gypsum
SCALE: 1/2"=1'-0"	DETAIL: SS 501	

© National Gypsum Properties, LLC

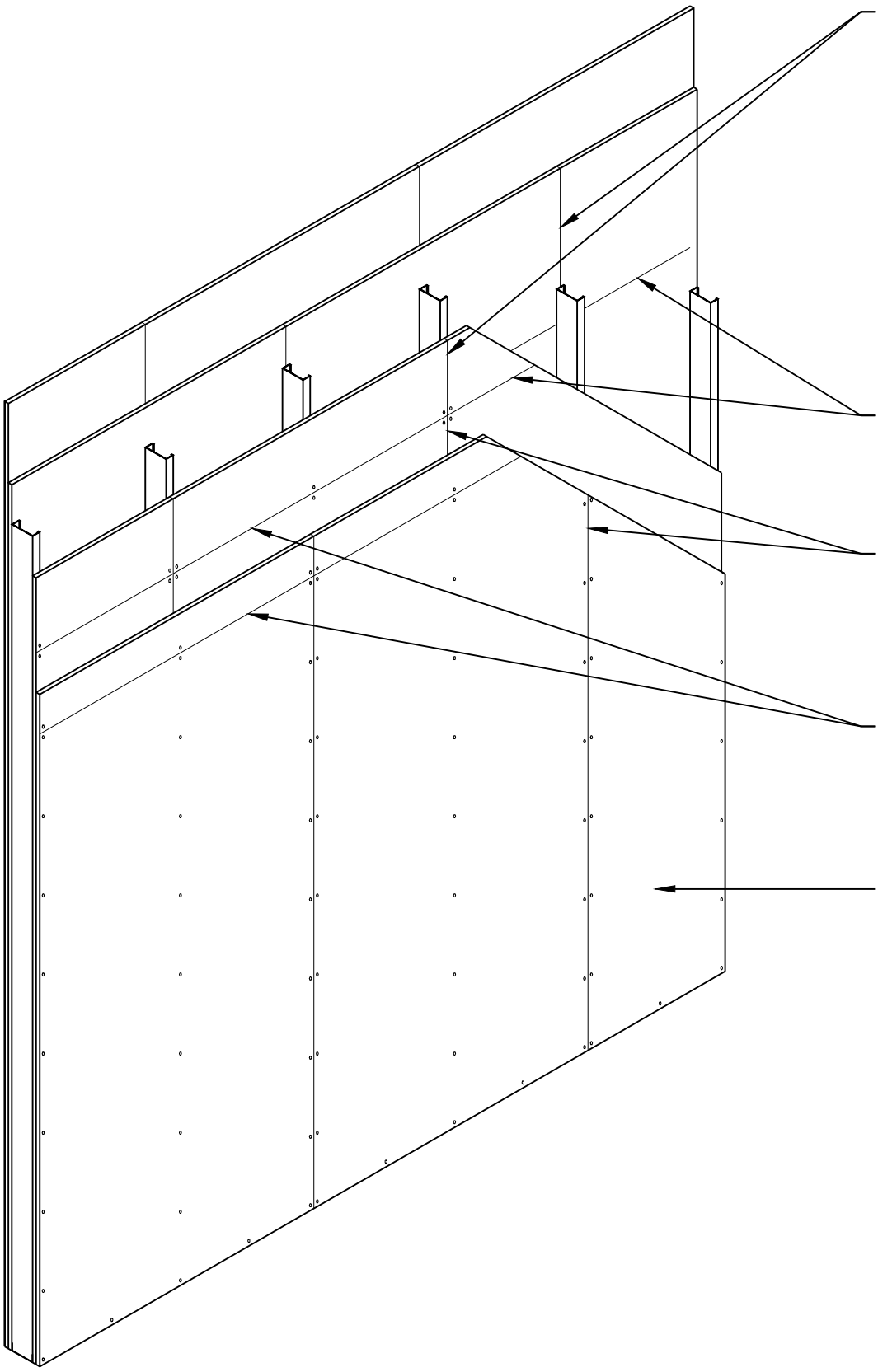

PARTITION - 2 HR
UL DESIGN: U411
UL DESIGN: V438

DATE: 11/05/13	2 HR PARTITION JOINT STAGGERING REQUIREMENTS	National Gypsum
SCALE: 1/2"=1'-0"	DETAIL: SS 502	

© National Gypsum Properties, LLC

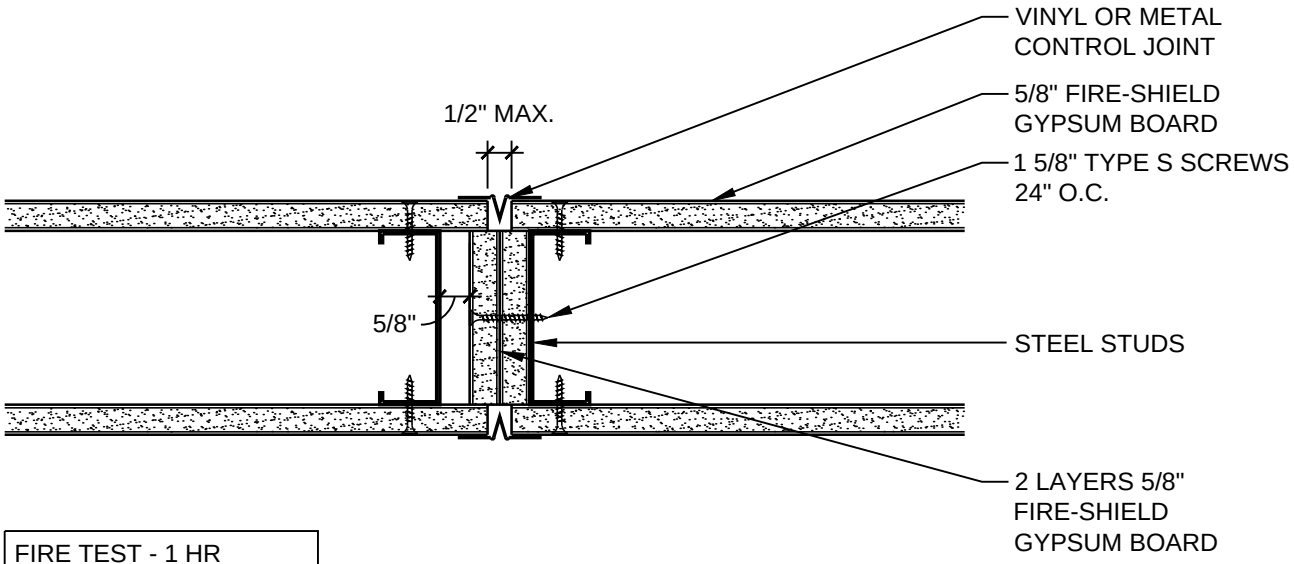

FIRE TEST - 1 HR
WHI-647-3024

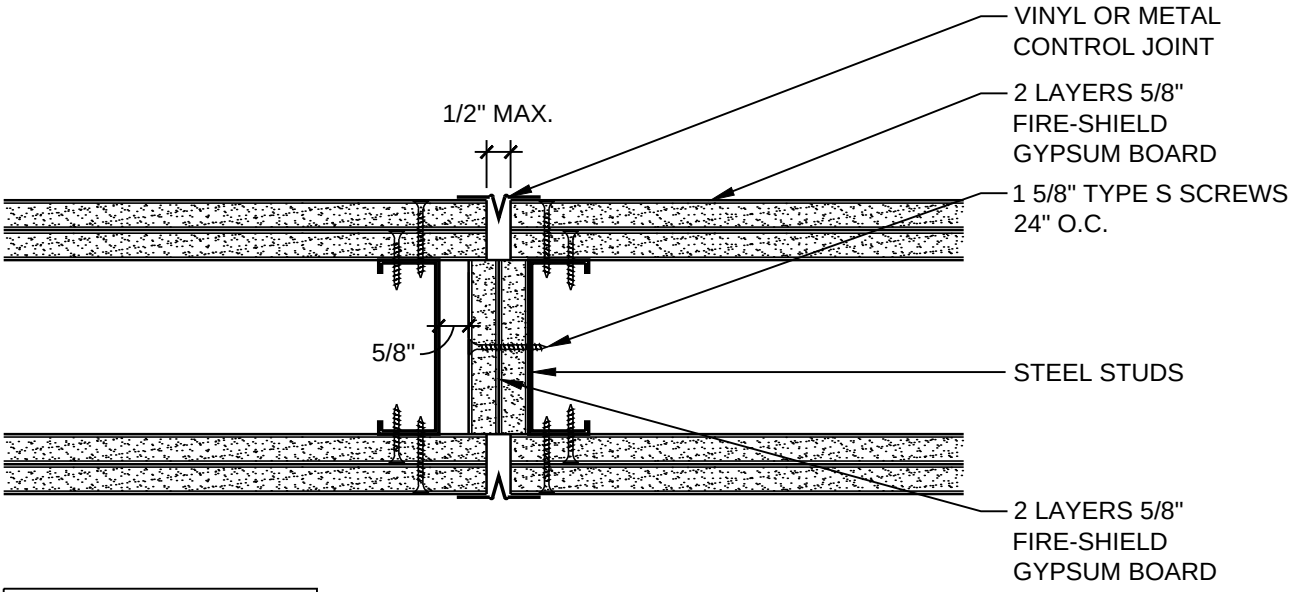

FIRE TEST - 2 HR
WHI-651-0318.1

DATE: 11/05/13	CONTROL JOINTS FOR FIRE-RATED SYSTEMS	National Gypsum
SCALE: 3"=1'-0"	DETAIL: SS 503	

© National Gypsum Properties, LLC

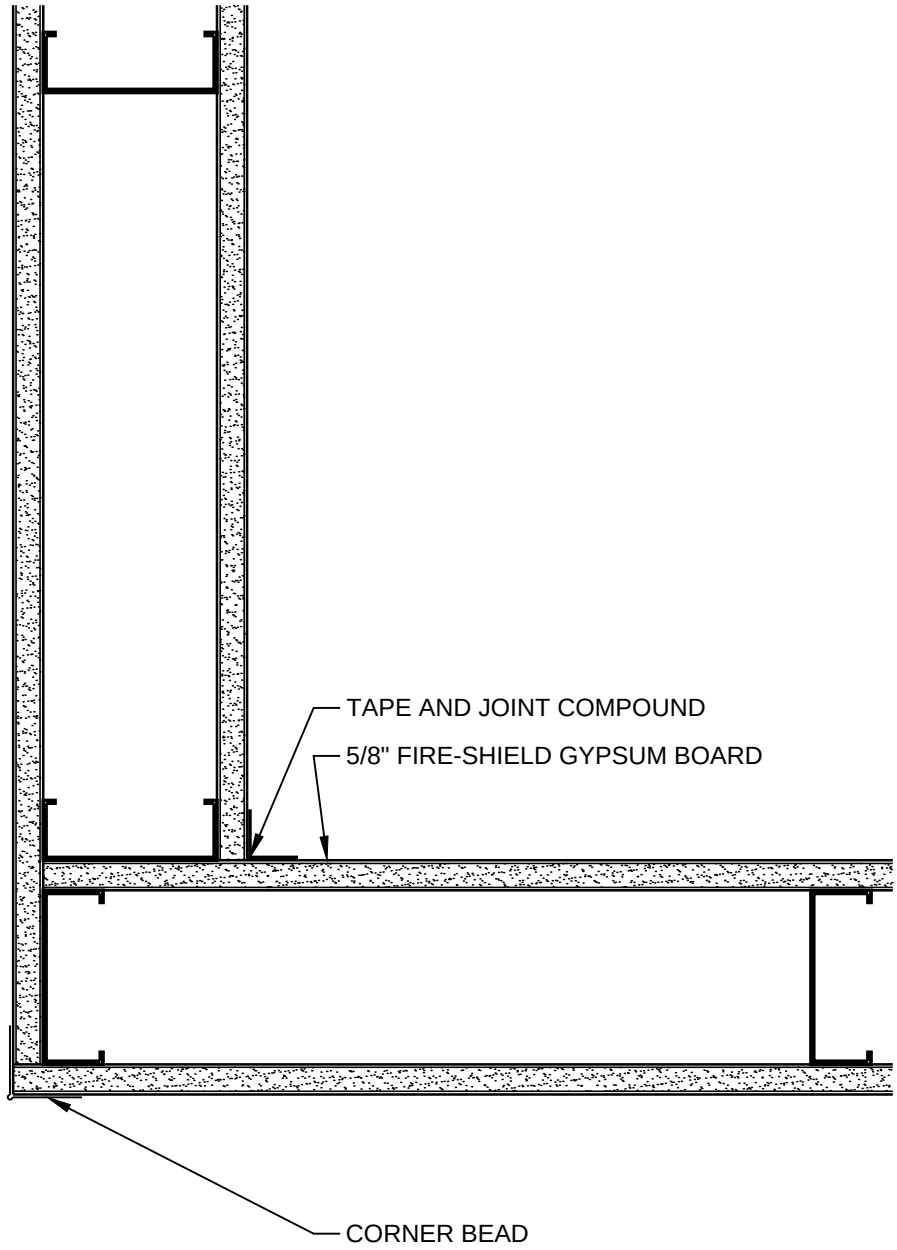

PARTITION - 1 HR
UL DESIGN: U465
UL DESIGN: V438

DATE: 11/05/13	1 HOUR PARTITION CORNER DETAIL	National Gypsum
SCALE: 3"=1'-0"	DETAIL: SS 504	

© National Gypsum Properties, LLC

PARTITION - 1 HR
UL DESIGN: U465
UL DESIGN: V438

PARTITION - 2 HR
UL DESIGN: U411
UL DESIGN: V438

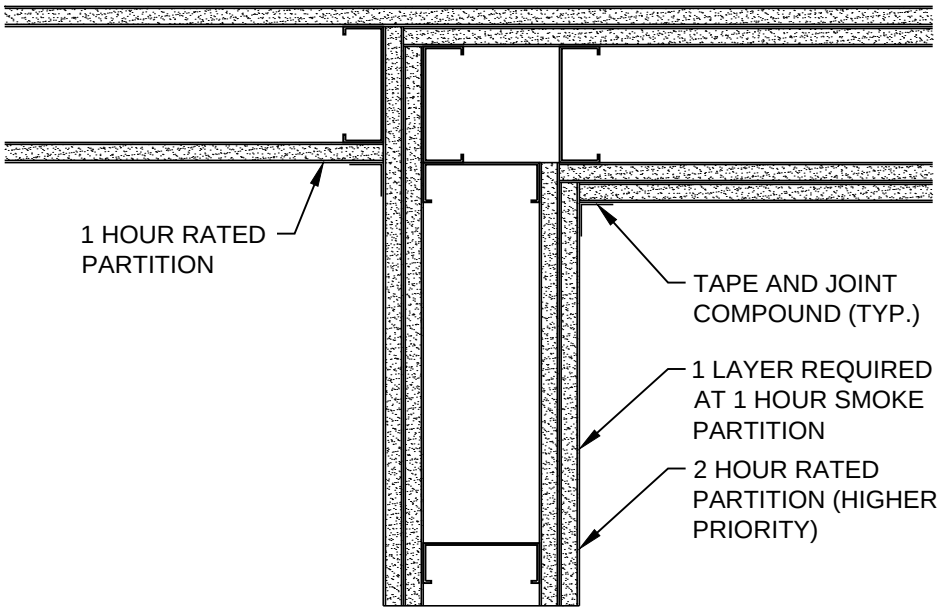

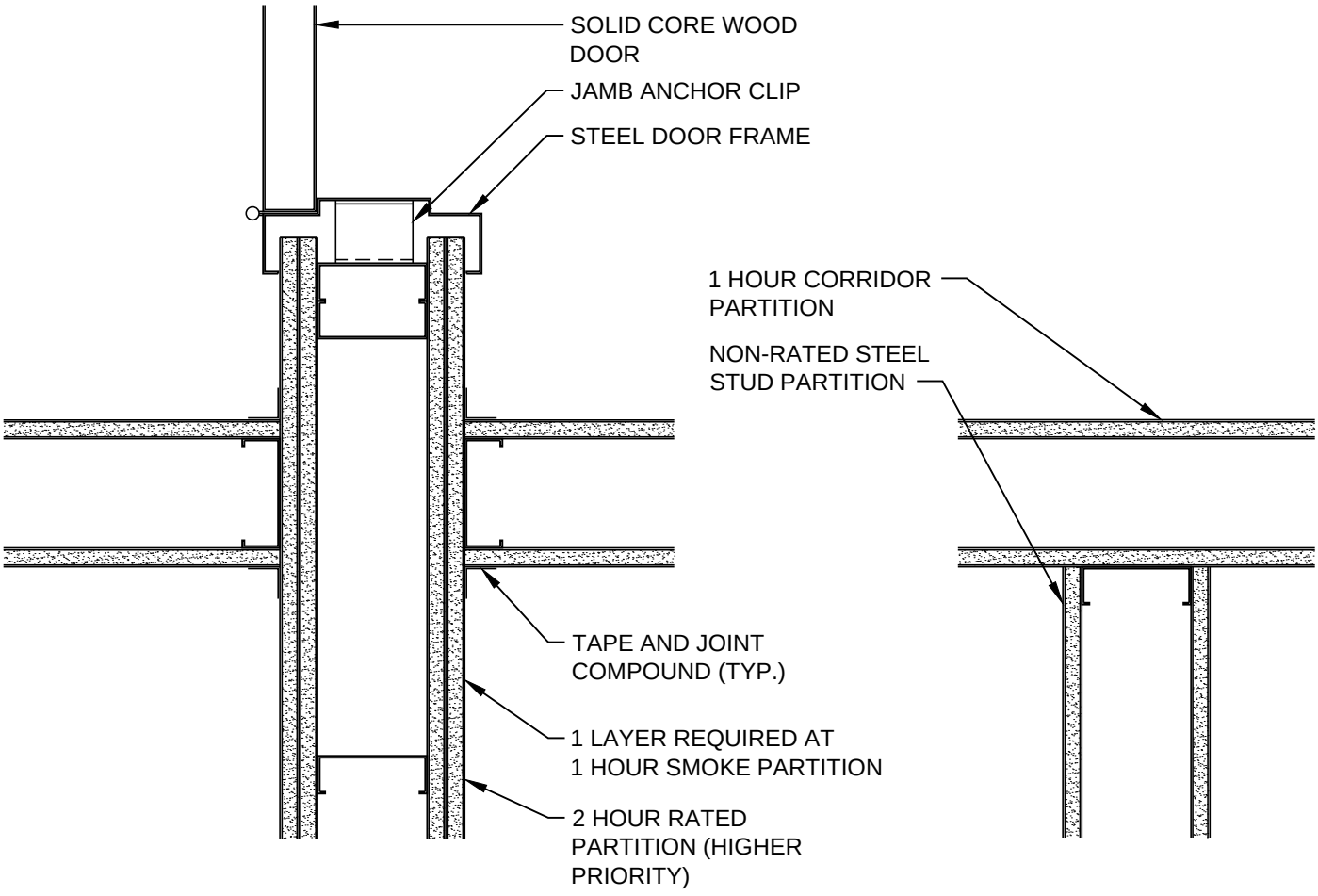

DATE: 11/05/13	INTERSECTIONS OF RATED PARTITIONS	National Gypsum
SCALE: 2"=1'-0"	DETAIL: SS 505	

© National Gypsum Properties, LLC

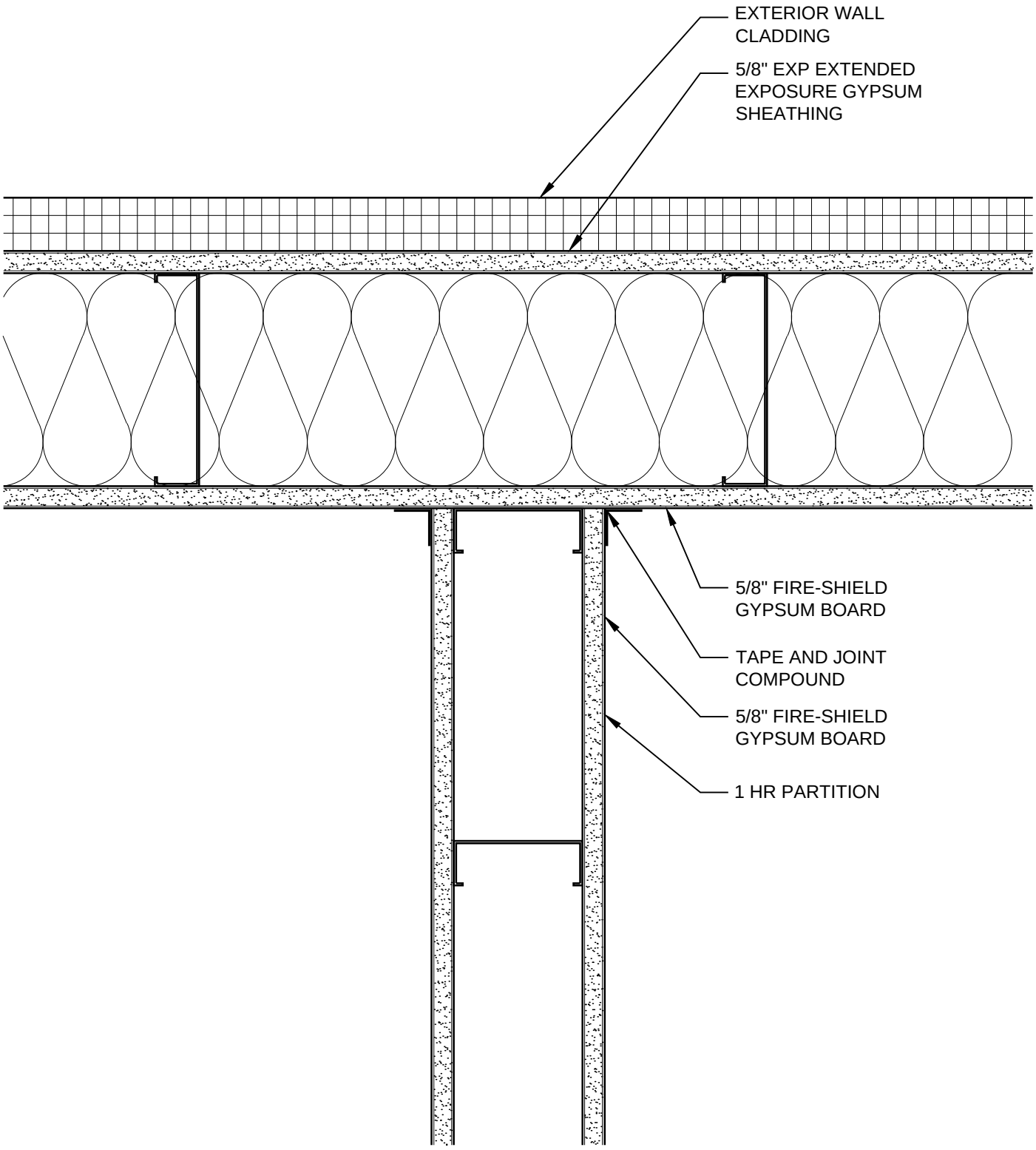

DATE: 11/05/13	1 HOUR PARTITION AT 1 HOUR EXTERIOR WALL	National Gypsum
SCALE: 3"=1'-0"	DETAIL: SS 506	

© National Gypsum Properties, LLC

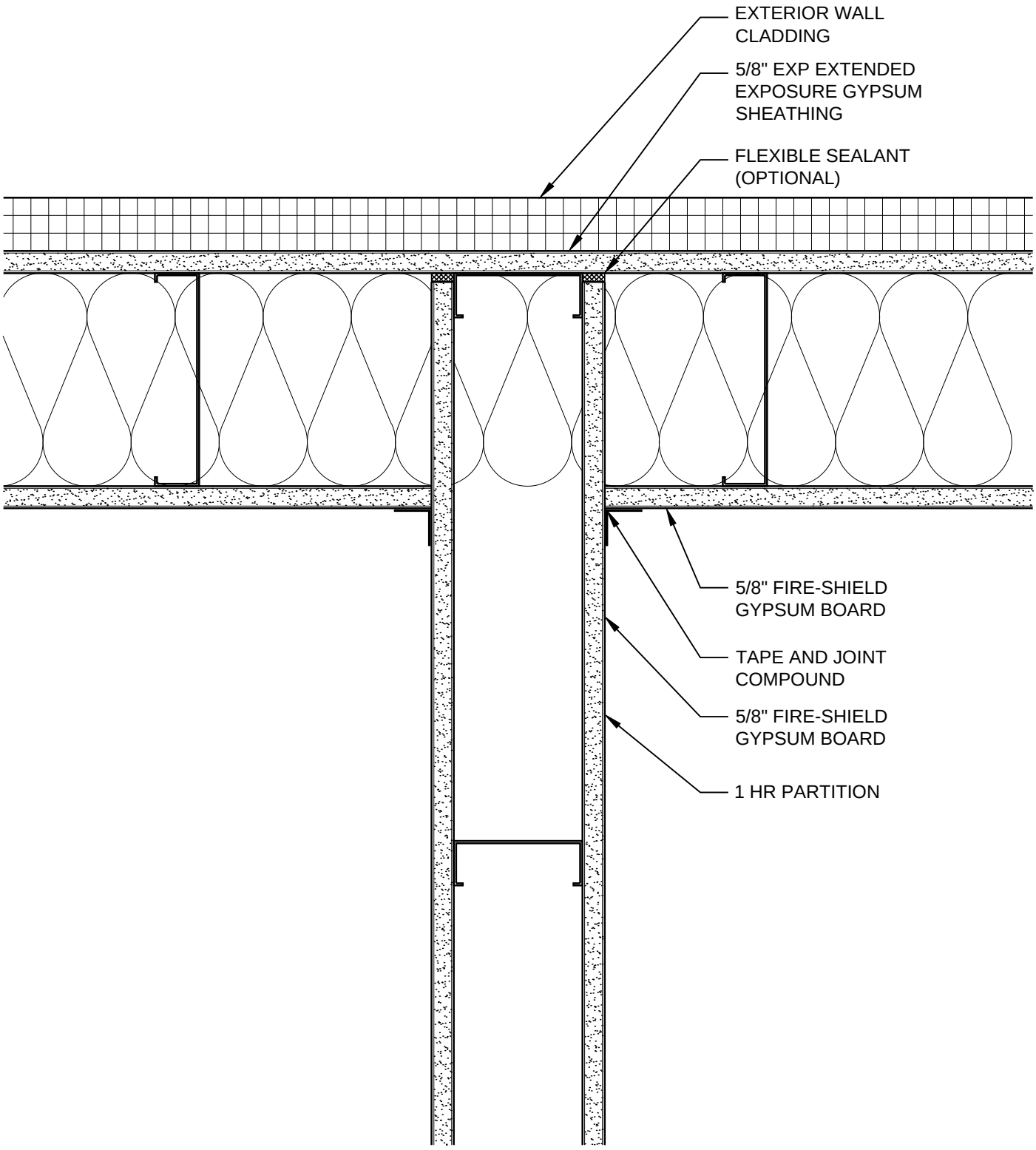

DATE: 11/05/13	1 HOUR PARTITION AT NON-RATED EXTERIOR WALL	National Gypsum
SCALE: 3"=1'-0"	DETAIL: SS 507	

© National Gypsum Properties, LLC

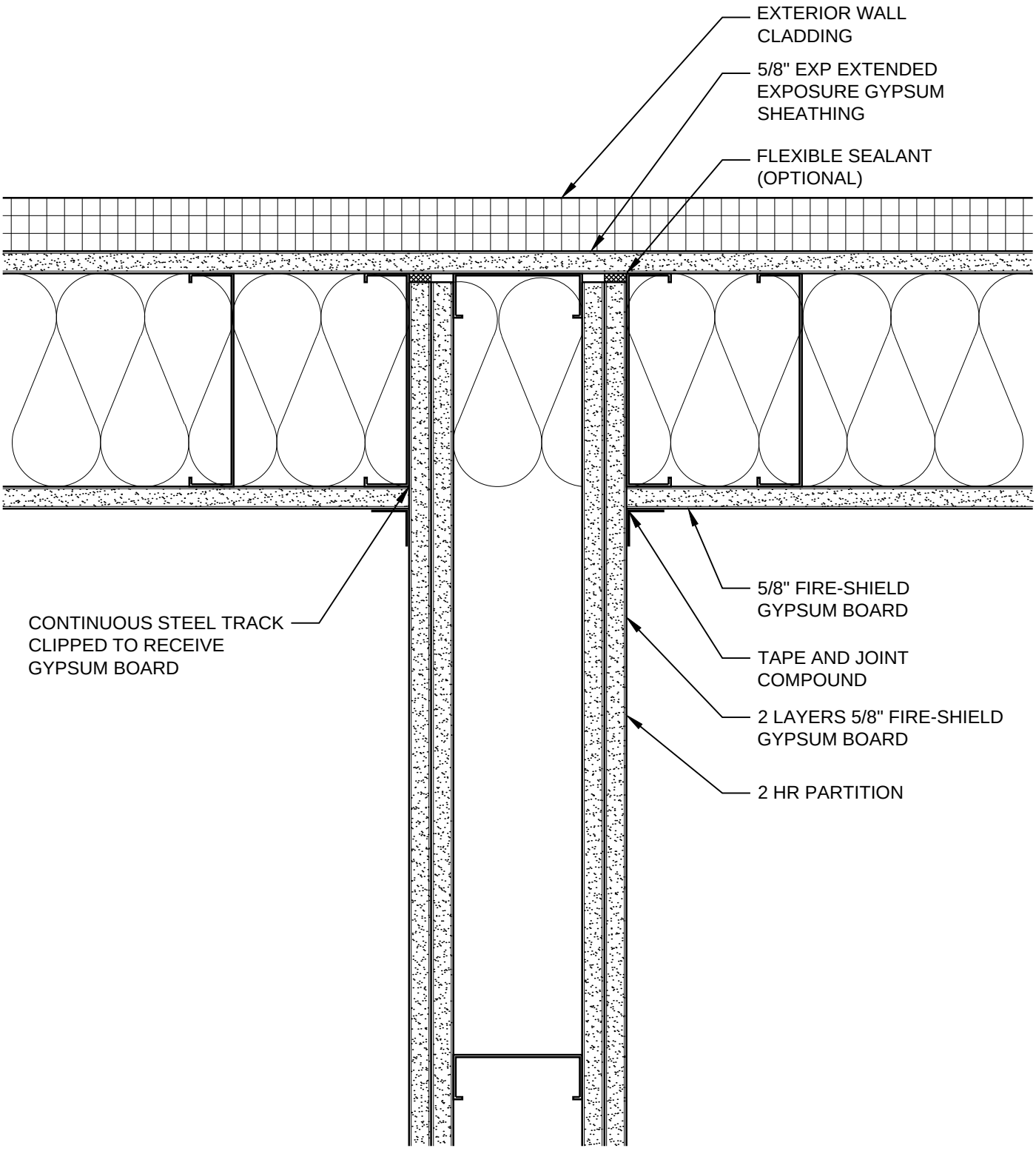

DATE: 11/05/13	2 HOUR PARTITION AT 1 HOUR EXTERIOR WALL	National Gypsum
SCALE: 3"=1'-0"	DETAIL: SS 508	

© National Gypsum Properties, LLC

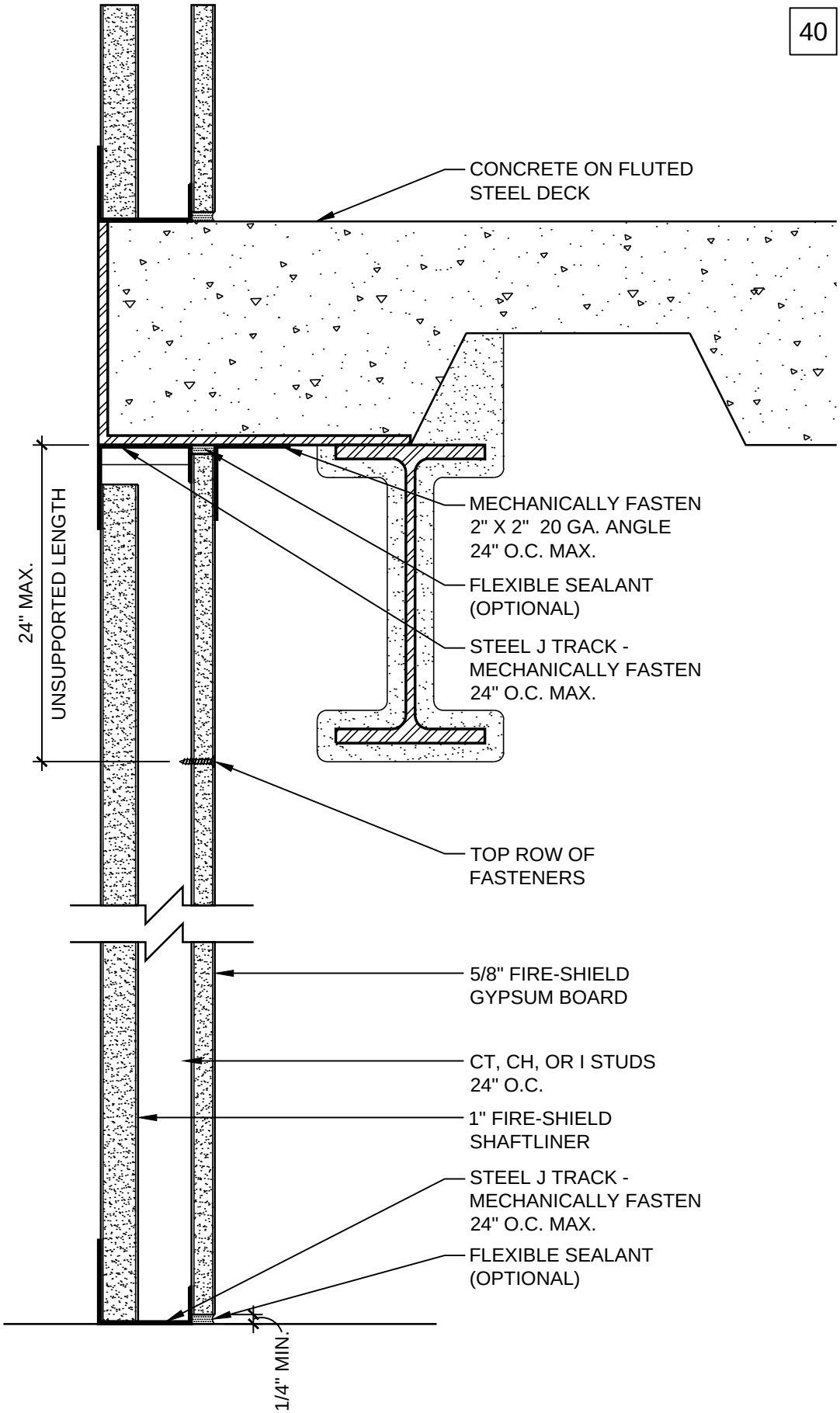

HEAD OF WALL - 1 HR
FMJ.I.1J6Q8.AC

PARTITION - 1 HR
UL DESIGN: U499
UL DESIGN: W419

DATE: 11/05/13	1 HOUR SHAFTWALL PARTITION	National Gypsum
SCALE: 3"=1'-0"	DETAIL: SW 101	

© National Gypsum Properties, LLC

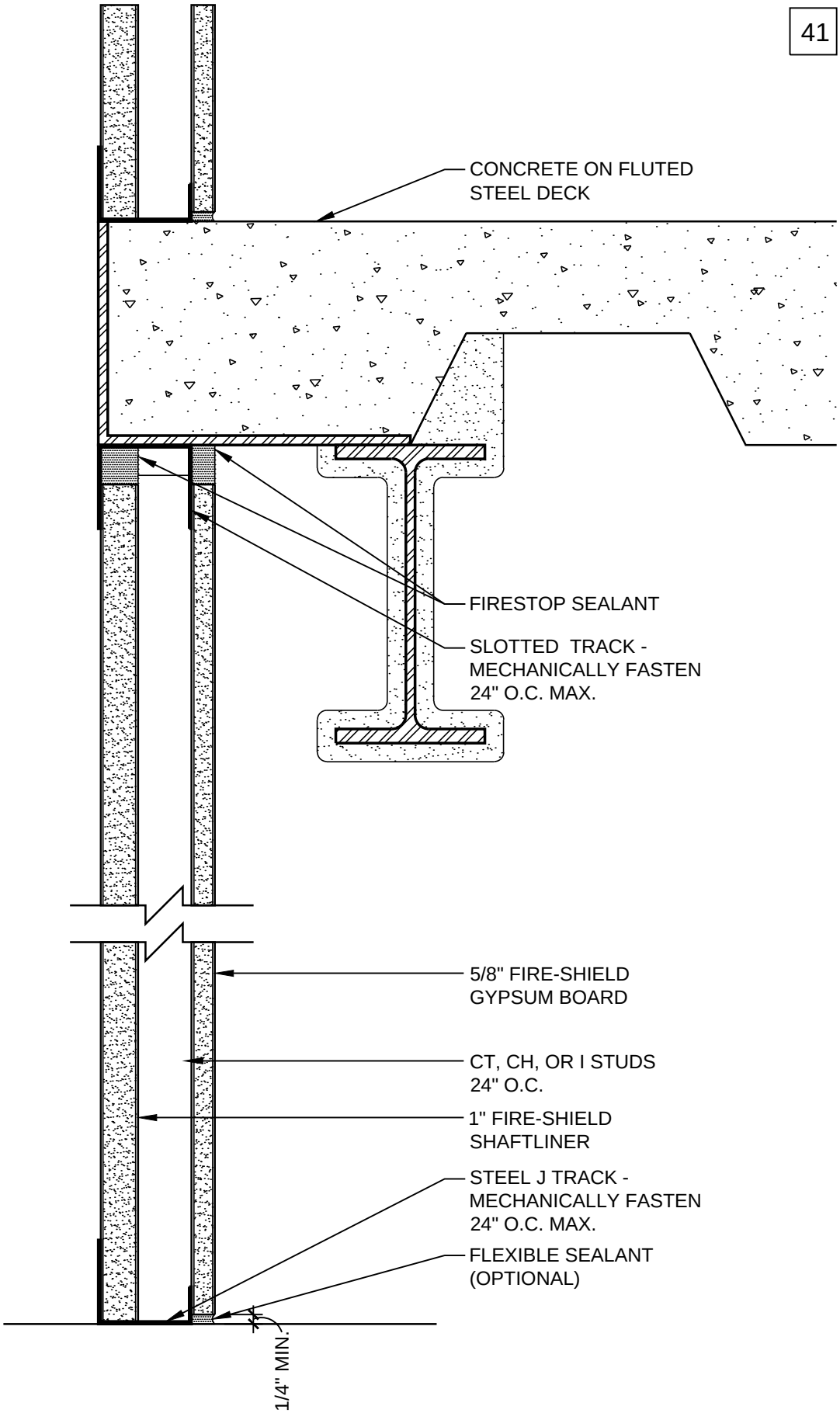

HEAD OF WALL - 1 HR
UL DESIGN: HW-D-0194

PARTITION - 1 HR
UL DESIGN: U499
UL DESIGN: W419

DATE: 11/05/13	1 HOUR SHAFTWALL WITH DEFLECTION TRACK	National Gypsum
SCALE: 3"=1'-0"	DETAIL: SW 102	

© National Gypsum Properties, LLC

HEAD OF WALL - 1 HR
UL DESIGN: HW-D-0572

PARTITION - 1 HR
UL DESIGN: U499
UL DESIGN: W419

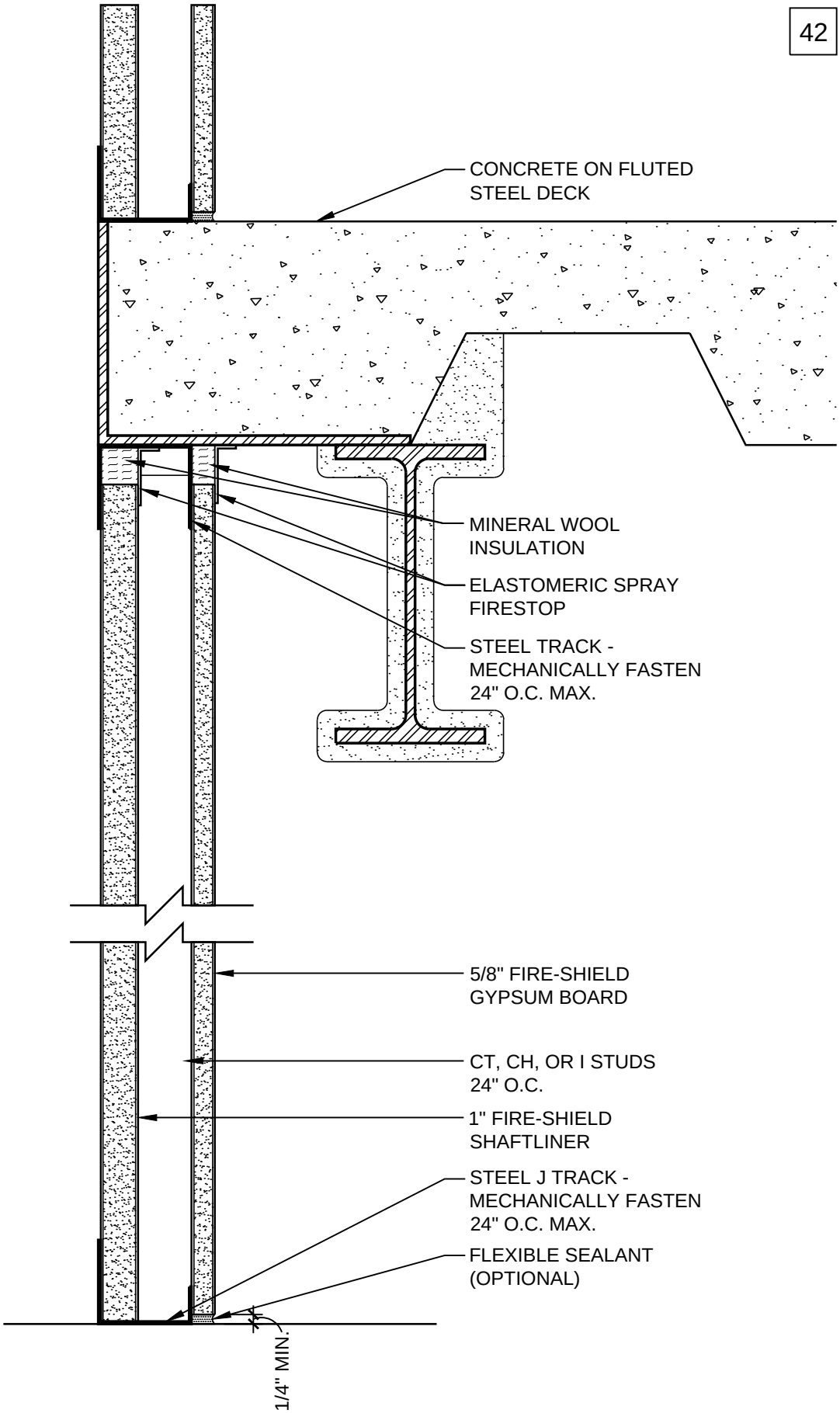

DATE: 11/05/13	1 HOUR SHAFTWALL WITH DEFLECTION TRACK	National Gypsum
SCALE: 3"=1'-0"	DETAIL: SW 103	

© National Gypsum Properties, LLC

HEAD OF WALL - 1 HR
UL DESIGN: HW-D-0548

PARTITION - 1 HR
UL DESIGN: U499
UL DESIGN: W419

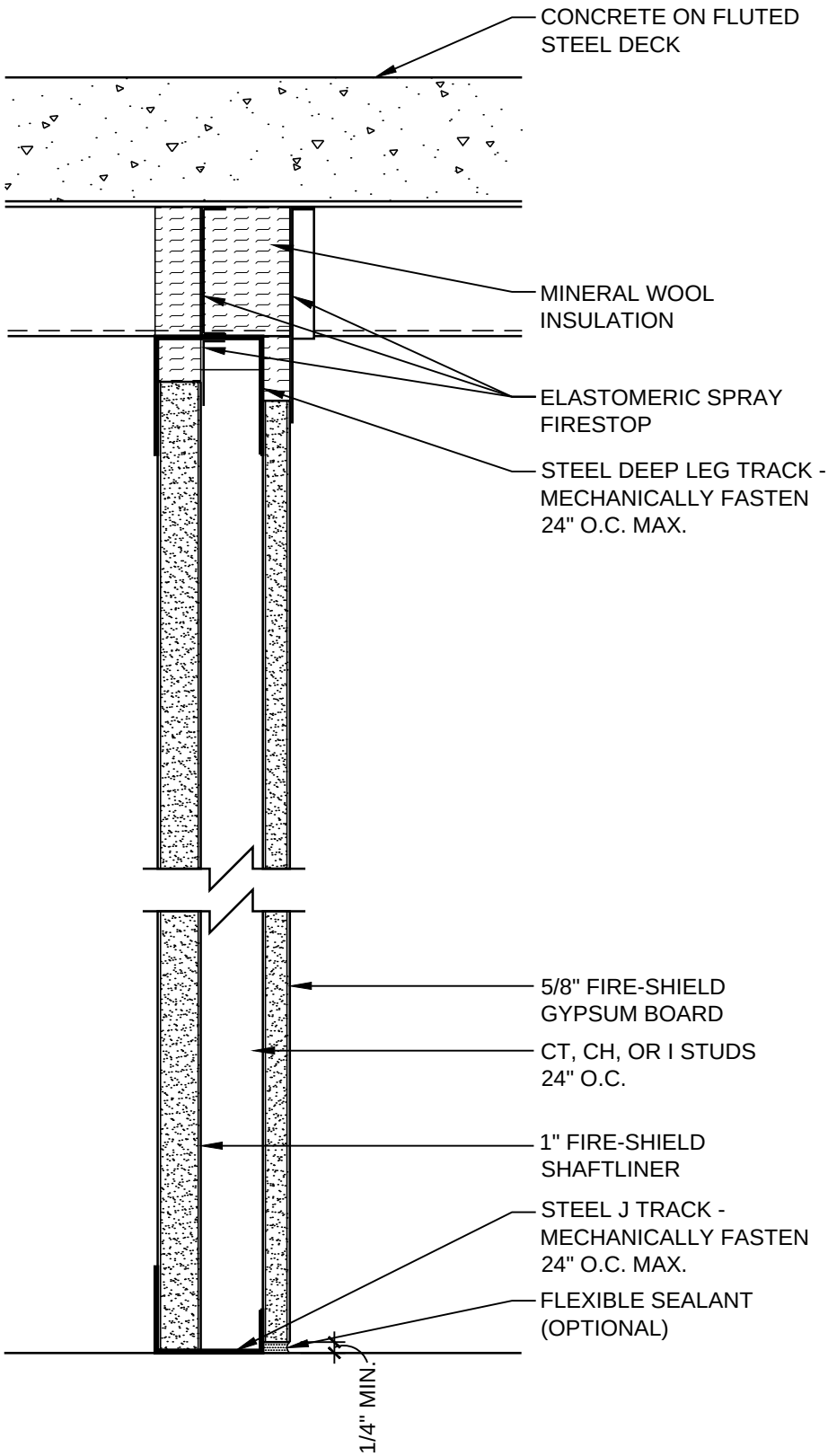

DATE: 11/05/13	1 HOUR SHAFTWALL TO STEEL DECK	National Gypsum
SCALE: 3"=1'-0"	DETAIL: SW 104	

© National Gypsum Properties, LLC

HEAD OF WALL - 1 HR
UL DESIGN: HW-D-0569

PARTITION - 1 HR
UL DESIGN: U499
UL DESIGN: W419

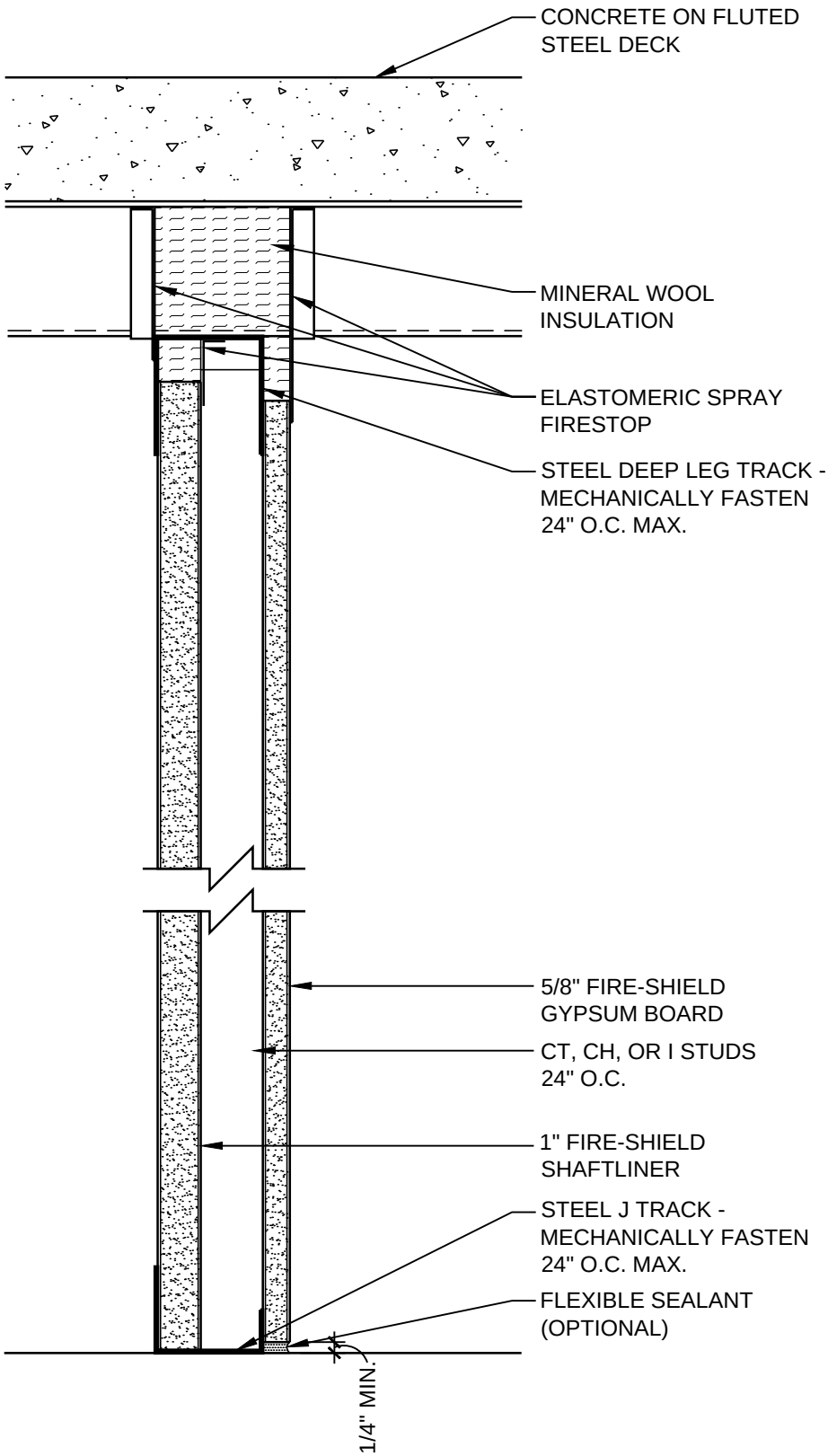

DATE: 11/05/13	1 HOUR SHAFTWALL TO STEEL DECK	National Gypsum
SCALE: 3"=1'-0"	DETAIL: SW 105	

© National Gypsum Properties, LLC

HEAD OF WALL - 1 HR
UL DESIGN: HW-D-0119

PARTITION - 1 HR
UL DESIGN: U499
UL DESIGN: W419

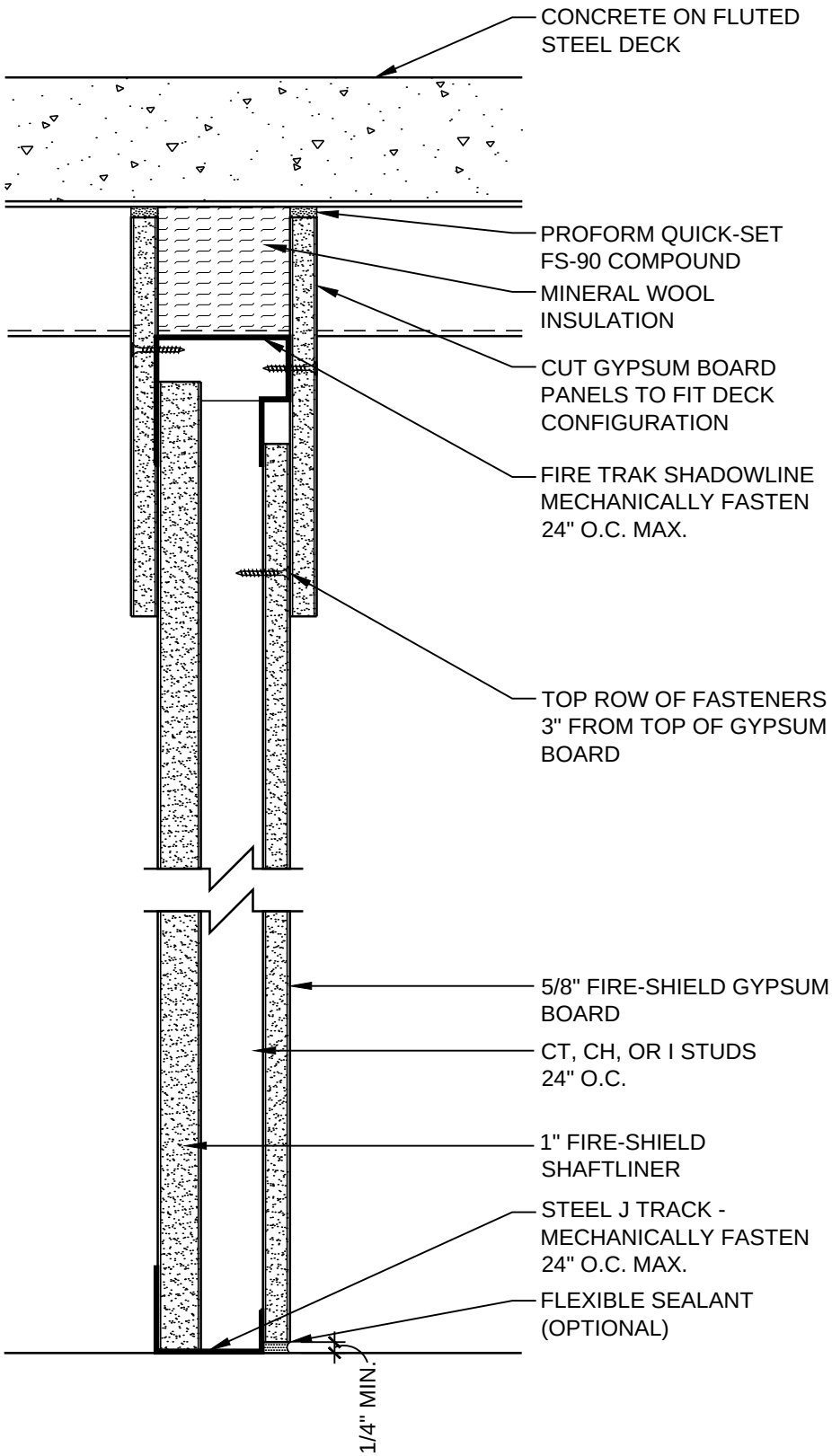

DATE: 11/05/13	1 HOUR SHAFTWALL WITH DEFLECTION TRACK	National Gypsum
SCALE: 3"=1'-0"	DETAIL: SW 106	

© National Gypsum Properties, LLC

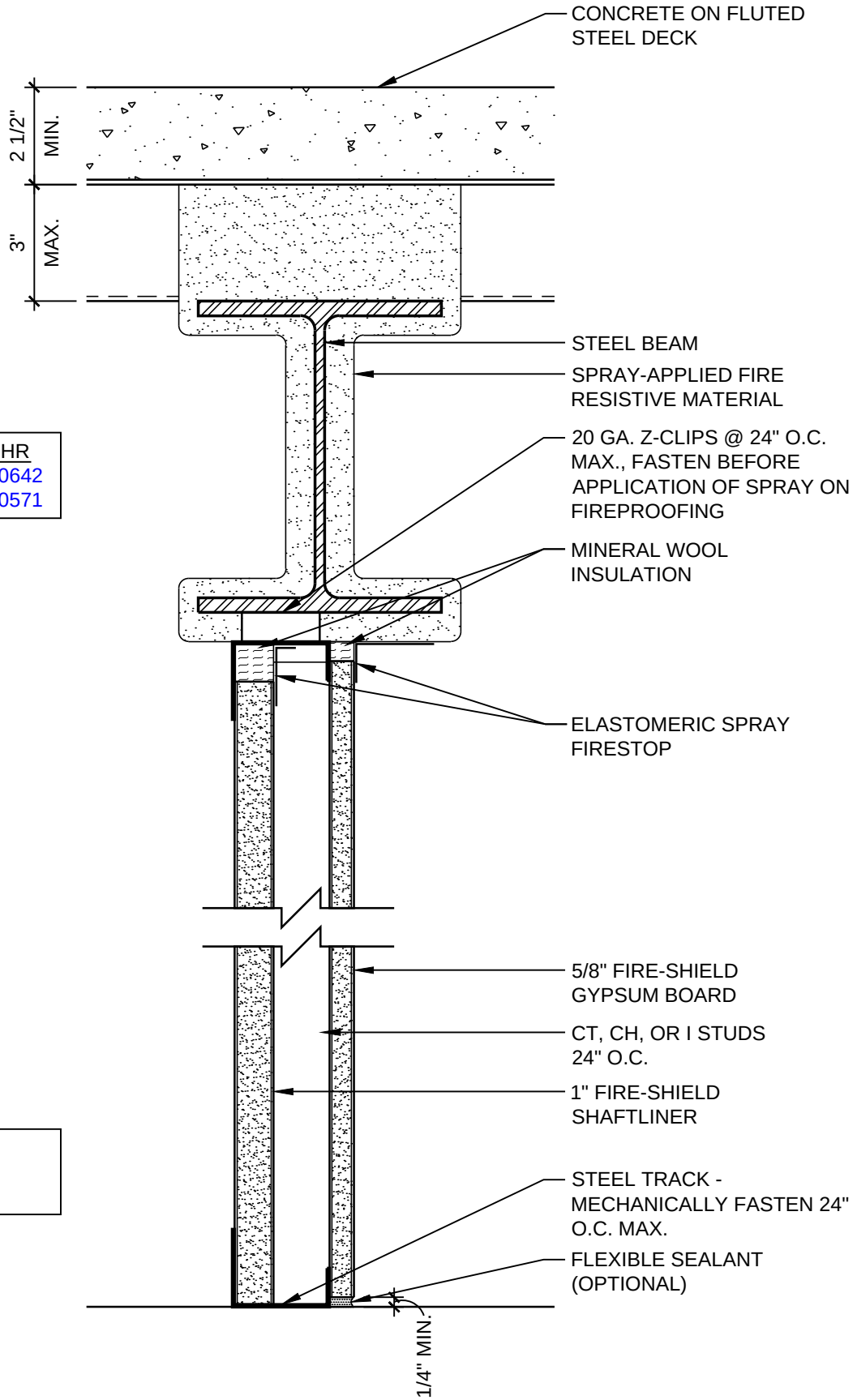

HEAD OF WALL - 1 HR
UL DESIGN: HW-D-0642
UL DESIGN: HW-D-0571

PARTITION - 1 HR
UL DESIGN: U499
UL DESIGN: W419

DATE: 11/05/13	1 HOUR SHAFTWALL PARTITION TO STEEL BEAM	National Gypsum
SCALE: 3"=1'-0"	DETAIL: SW 107	

© National Gypsum Properties, LLC

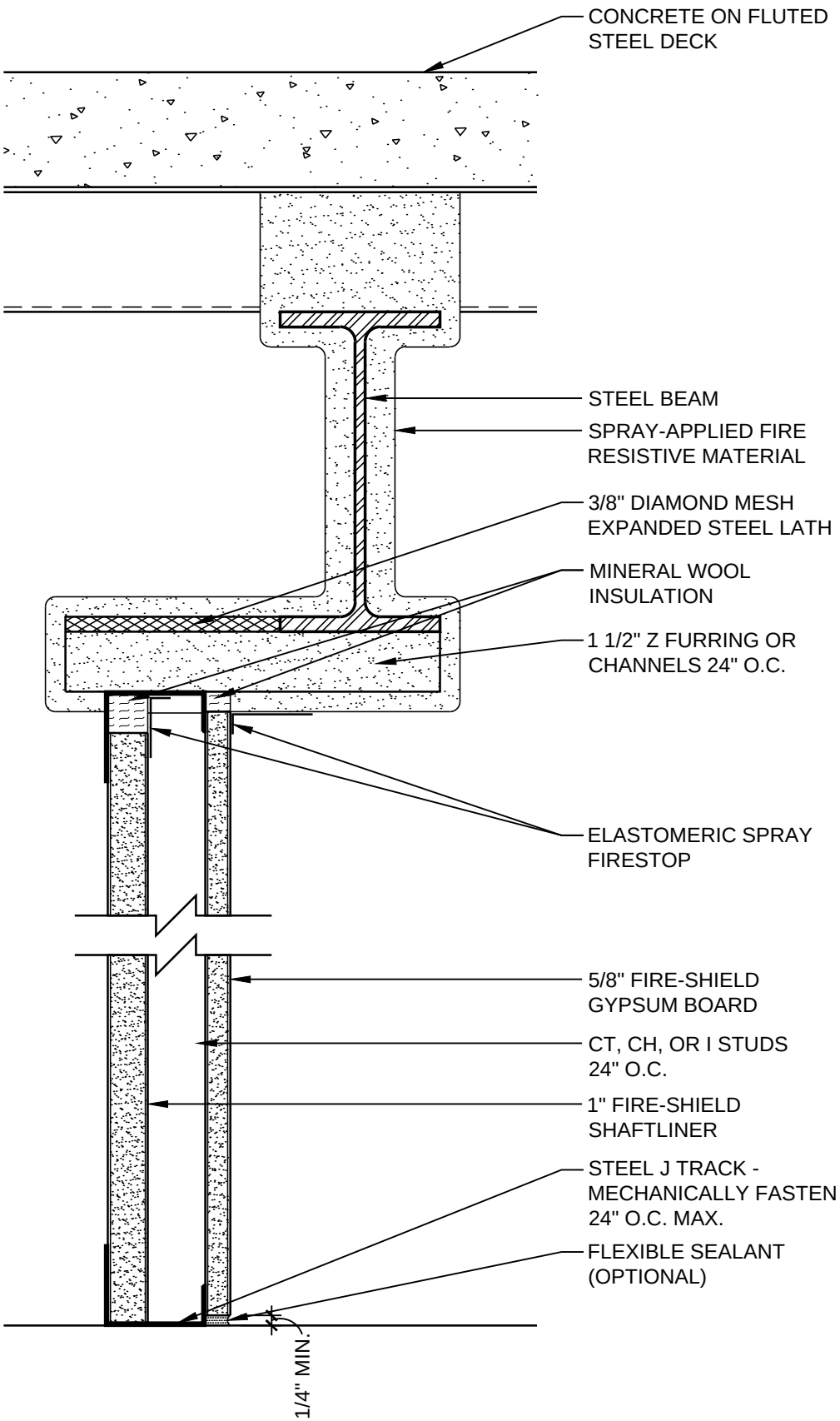

HEAD OF WALL - 1 HR
UL DESIGN: HW-D-0645
UL DESIGN: HW-D-0636

PARTITION - 1 HR
UL DESIGN: U499
UL DESIGN: W419

DATE: 11/05/13	1 HOUR SHAFTWALL PARTITION OFFSET FROM BEAM	National Gypsum
SCALE: 3"=1'-0"	DETAIL: SW 108	

© National Gypsum Properties, LLC

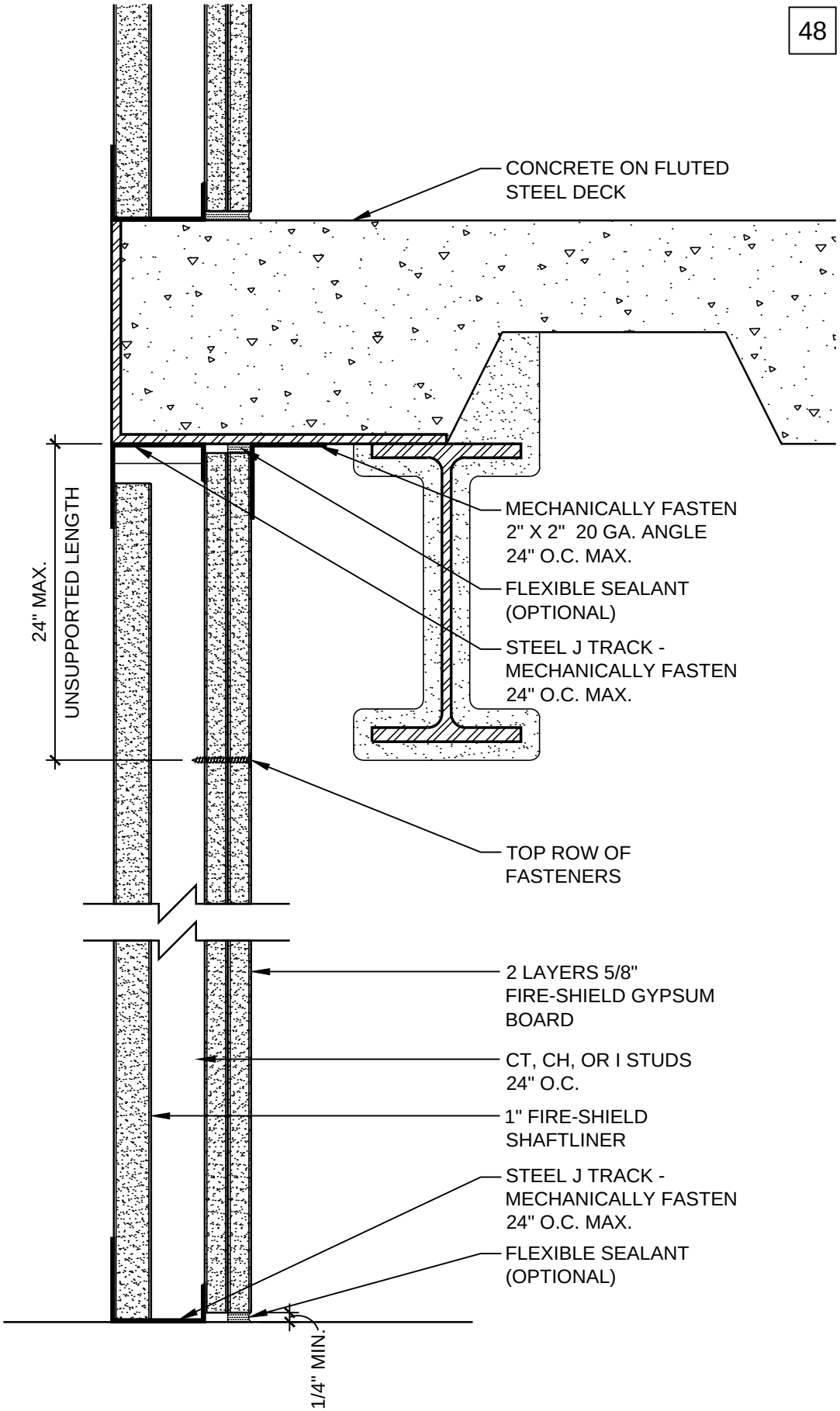

HEAD OF WALL - 2 HR
FMJ.I.1J6Q8.AC

PARTITION - 2 HR
UL DESIGN: U497
UL DESIGN: W419

DATE: 11/05/13	2 HOUR SHAFTWALL PARTITION	National Gypsum
SCALE: 3"=1'-0"	DETAIL: SW 201	

© National Gypsum Properties, LLC

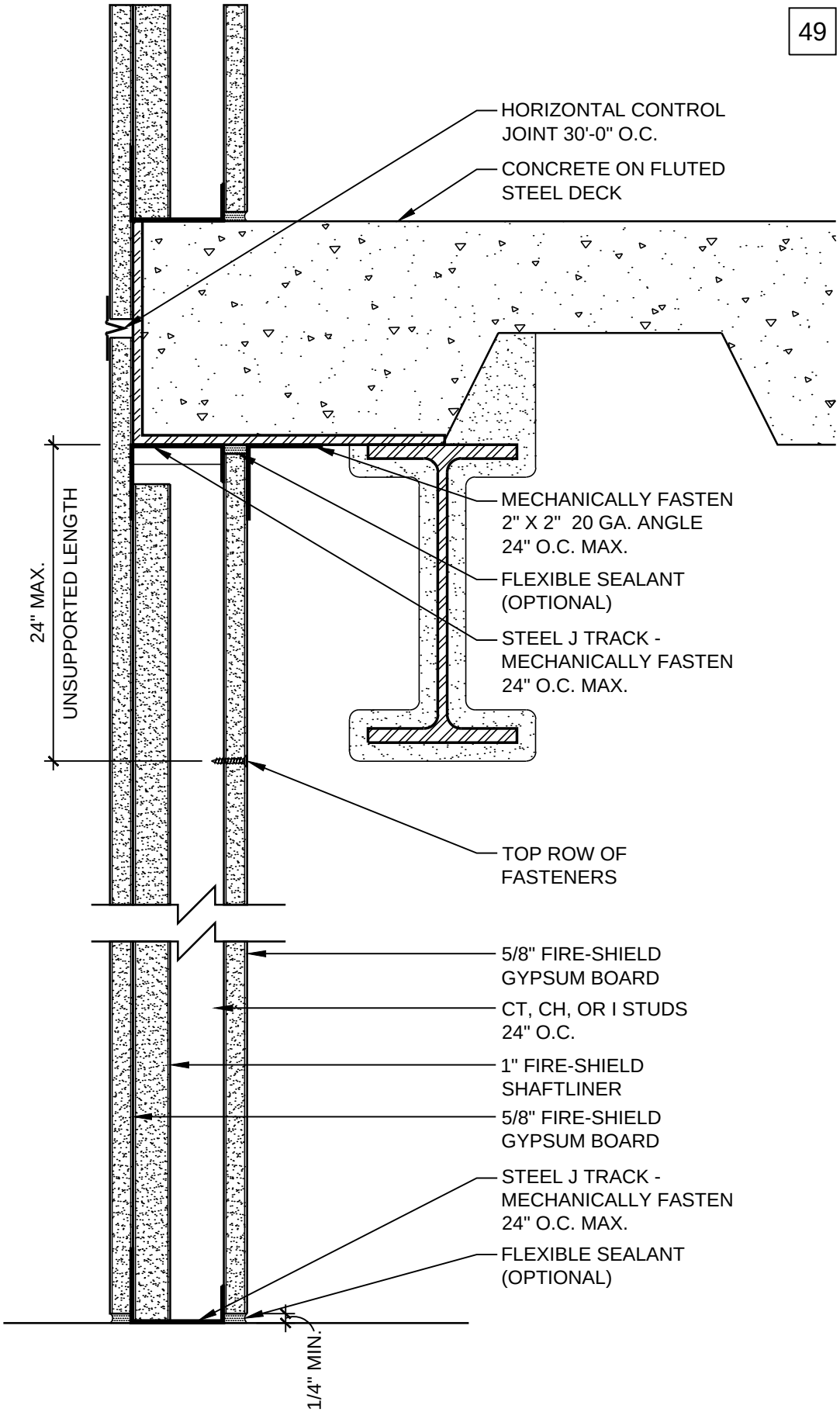

HEAD OF WALL - 2 HR
FMJ.I.1J6Q8.AC

PARTITION - 2 HR
UL DESIGN: U498
UL DESIGN: W419

DATE: 11/05/13	2 HOUR SHAFTWALL PARTITION AT STAIR	National Gypsum
SCALE: 3"=1'-0"	DETAIL: SW 202	

© National Gypsum Properties, LLC

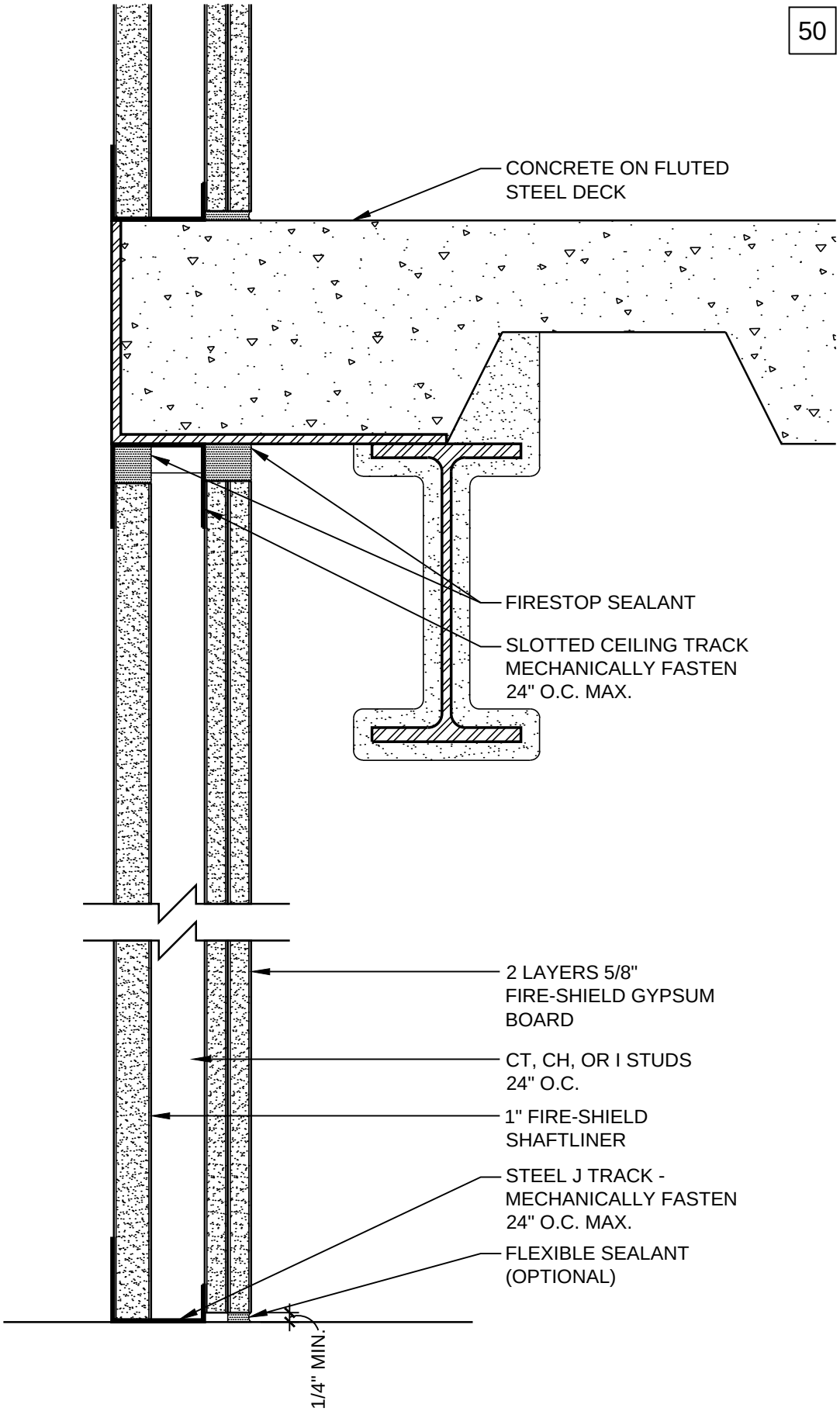

HEAD OF WALL - 2 HR
UL DESIGN: HW-D-0194
UL DESIGN: HW-D-0342

PARTITION - 2 HR
UL DESIGN: U497
UL DESIGN: W419

DATE: 11/05/13	2 HOUR SHAFTWALL WITH DEFLECTION TRACK	National Gypsum
SCALE: 3"=1'-0"	DETAIL: SW 203	

© National Gypsum Properties, LLC

HEAD OF WALL - 2 HR
UL DESIGN: HW-D-0548

PARTITION - 2 HR
UL DESIGN: U497
UL DESIGN: W419

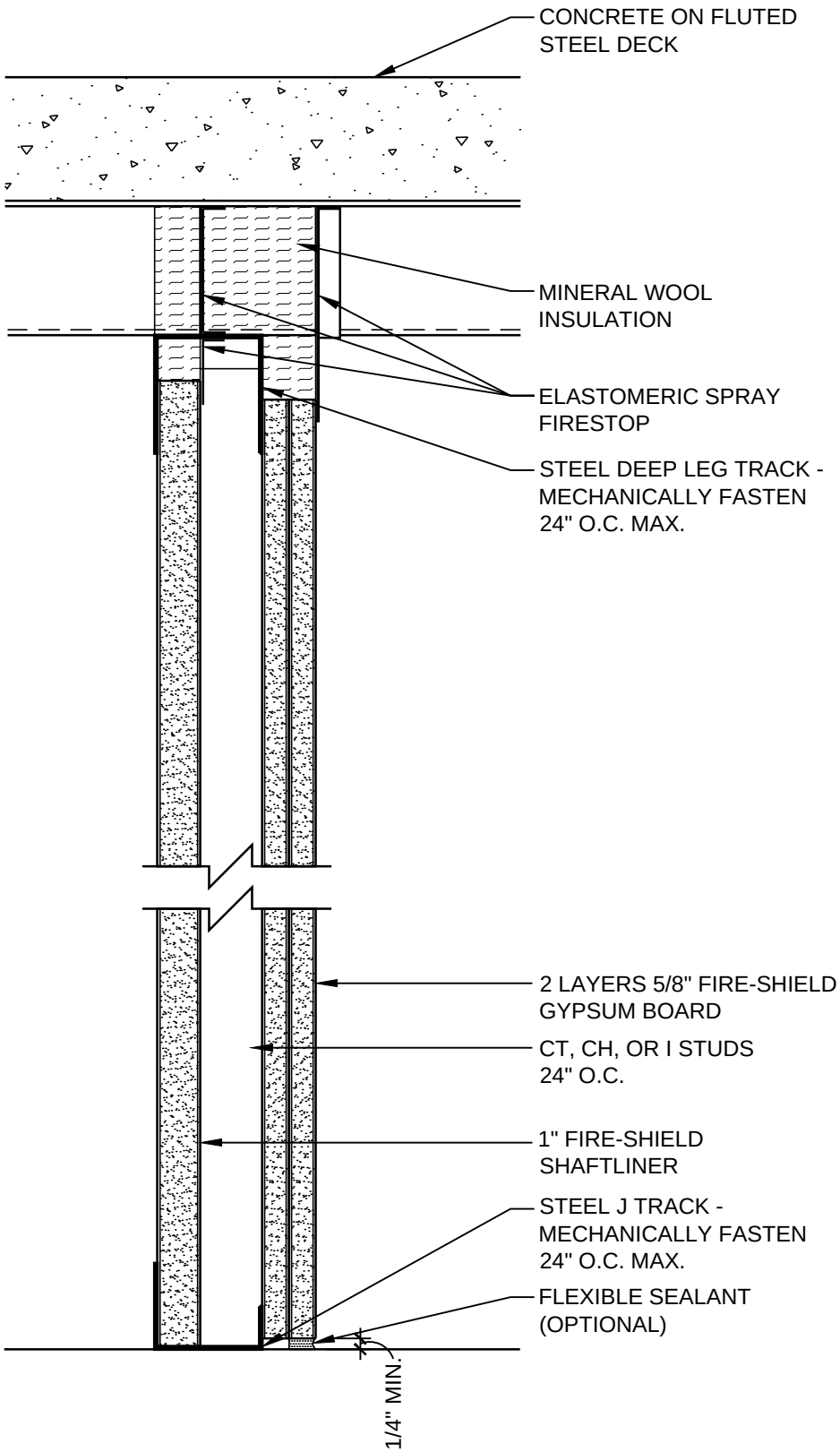

DATE: 11/05/13	2 HOUR SHAFTWALL TO STEEL DECK	National Gypsum
SCALE: 3"=1'-0"	DETAIL: SW 204	

© National Gypsum Properties, LLC

HEAD OF WALL - 2 HR
UL DESIGN: HW-D-0569

PARTITION - 2 HR
UL DESIGN: U497
UL DESIGN: W419

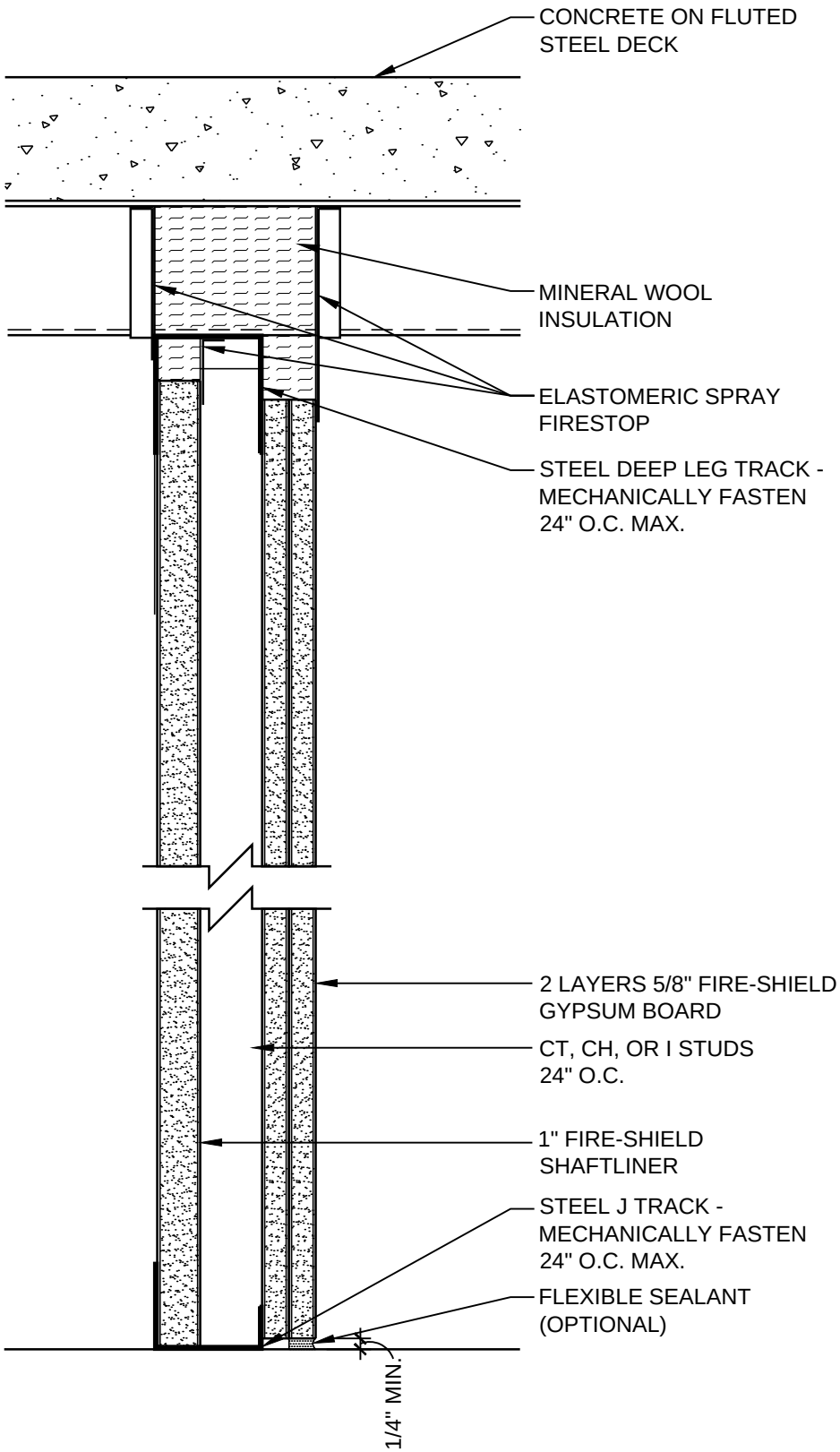

DATE: 11/05/13	2 HOUR SHAFTWALL TO STEEL DECK	National Gypsum
SCALE: 3"=1'-0"	DETAIL: SW 205	

© National Gypsum Properties, LLC

HEAD OF WALL - 2 HR
UL DESIGN: HW-D-0119

PARTITION - 2 HR
UL DESIGN: U497
UL DESIGN: W419

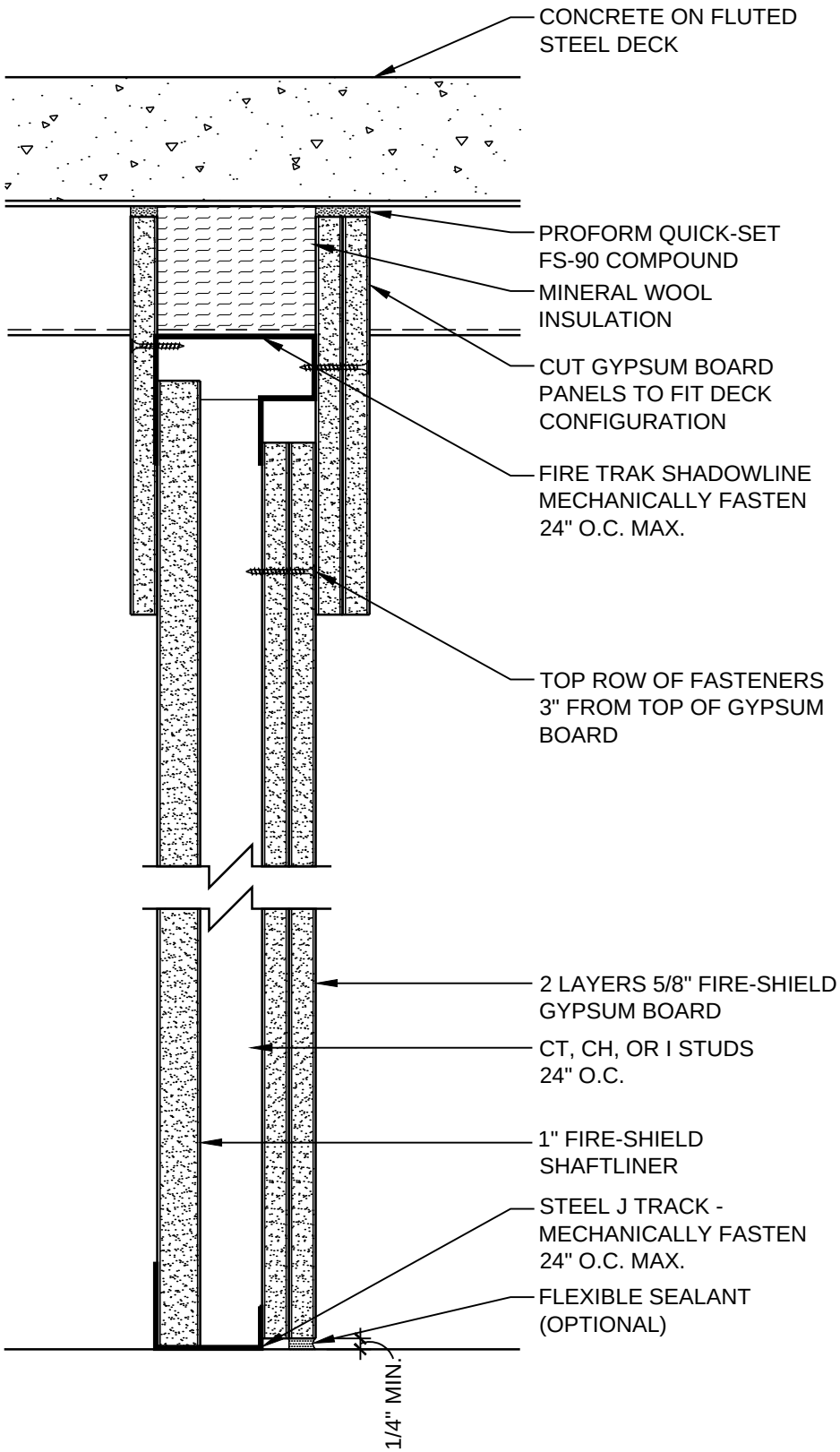

DATE: 11/05/13	2 HOUR SHAFTWALL WITH DEFLECTION TRACK	National Gypsum
SCALE: 3"=1'-0"	DETAIL: SW 206	

© National Gypsum Properties, LLC

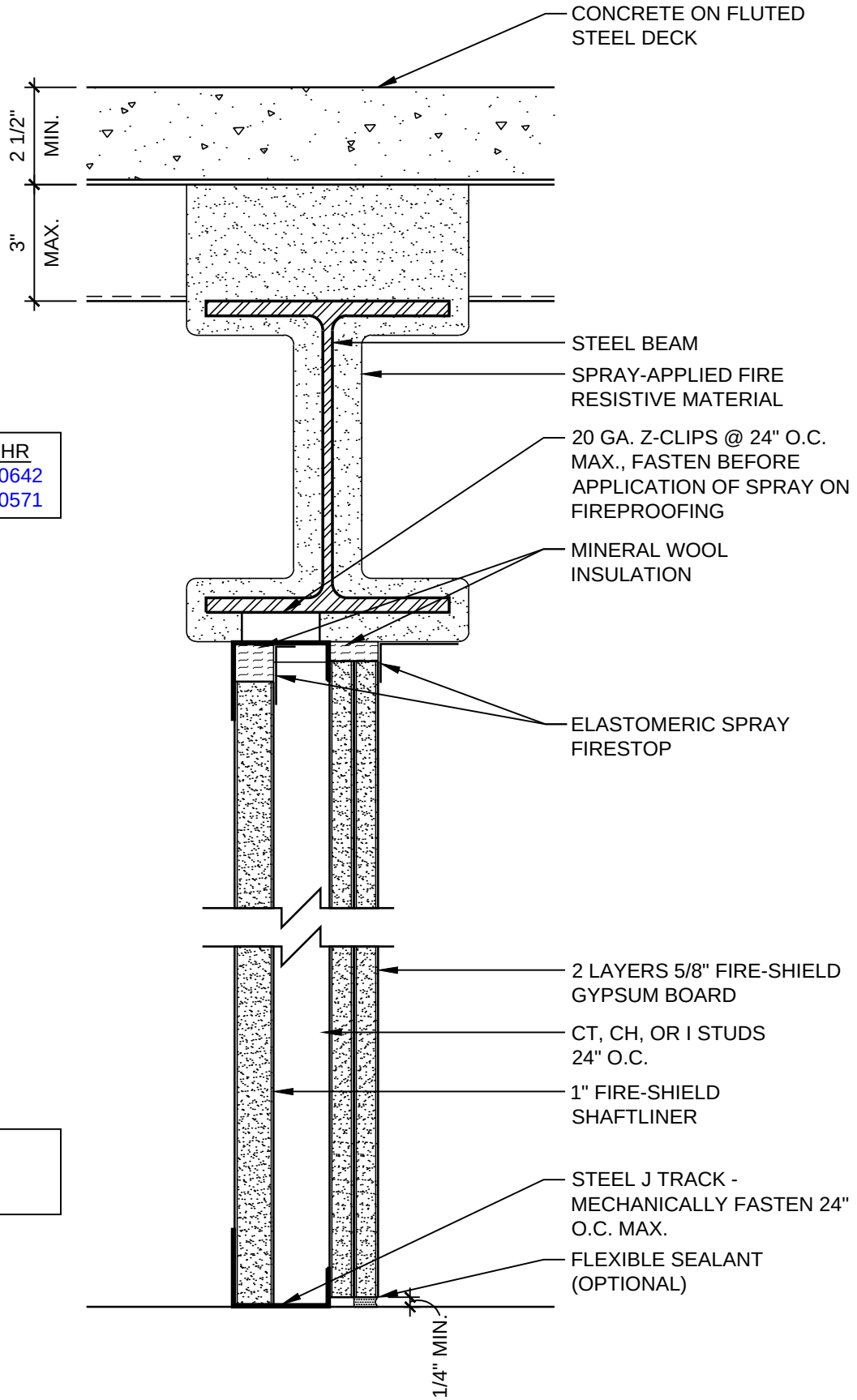

HEAD OF WALL - 2 HR
UL DESIGN: HW-D-0642
UL DESIGN: HW-D-0571

PARTITION - 2 HR
UL DESIGN: U497
UL DESIGN: W419

DATE: 11/05/13	2 HOUR SHAFTWALL PARTITION TO STEEL BEAM	National Gypsum
SCALE: 3"=1'-0"	DETAIL: SW 207	

© National Gypsum Properties, LLC

HEAD OF WALL - 2 HR
UL DESIGN: HW-D-0645
UL DESIGN: HW-D-0636

PARTITION - 2 HR
UL DESIGN: U497
UL DESIGN: W419

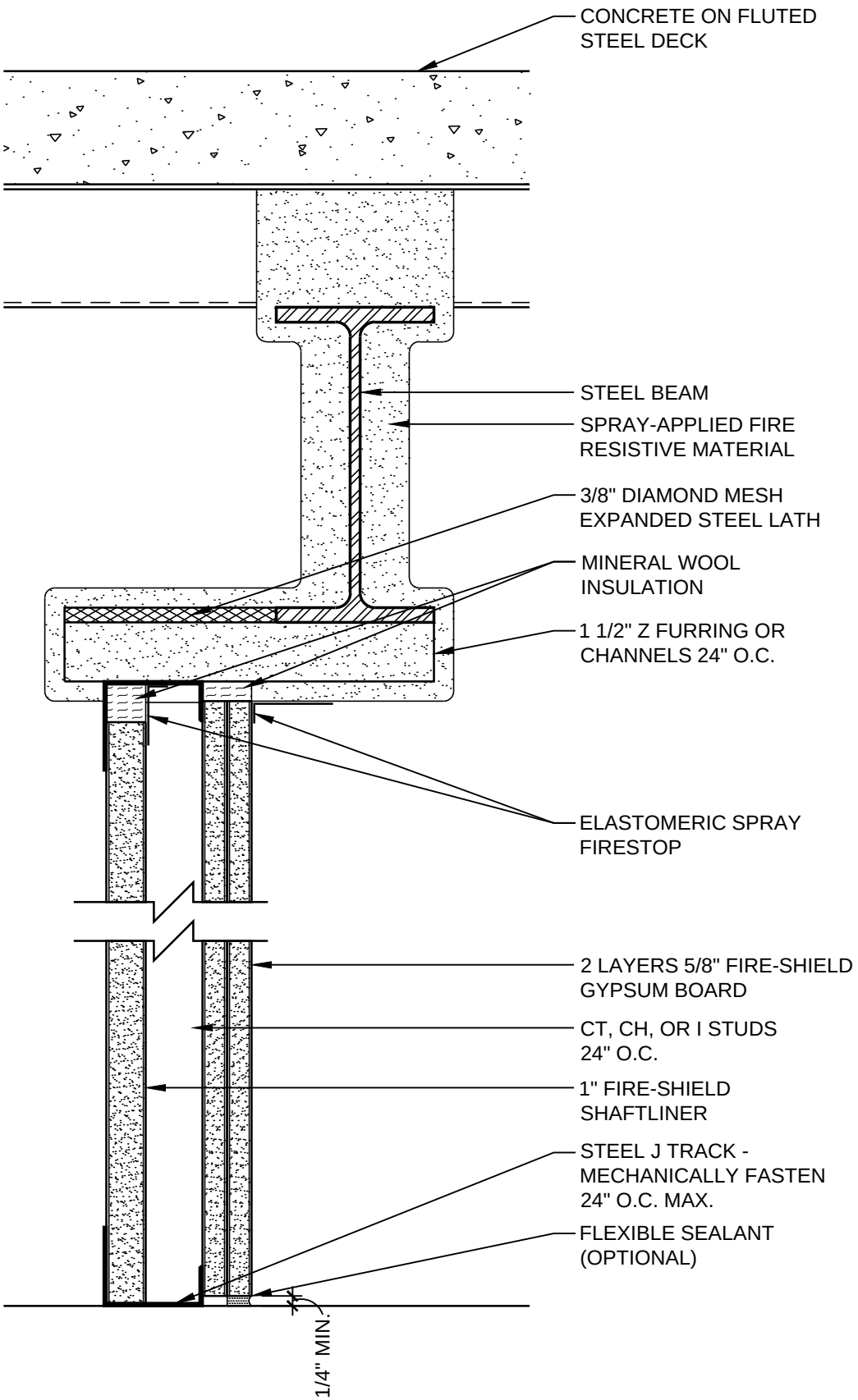

DATE: 11/05/13	2 HOUR SHAFTWALL PARTITION OFFSET FROM BEAM	National Gypsum
SCALE: 3"=1'-0"	DETAIL: SW 208	

© National Gypsum Properties, LLC

HEAD OF WALL - 3 HR
UL DESIGN: HW-D-0119

PARTITION - 3 HR
UL DESIGN: W414
UL DESIGN: W419

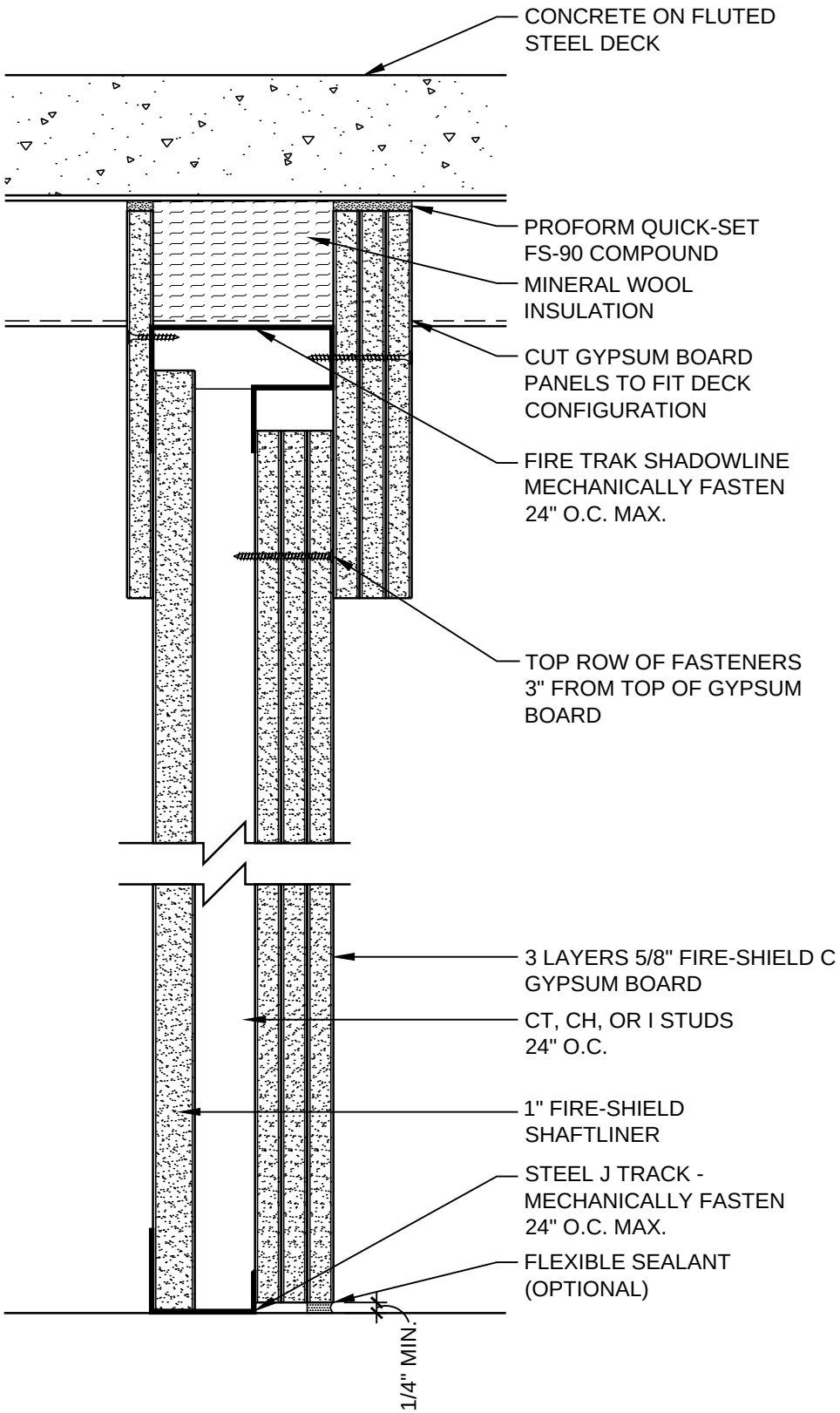

DATE: 11/05/13	3 HOUR SHAFTWALL WITH DEFLECTION TRACK	National Gypsum
SCALE: 3"=1'-0"	DETAIL: SW 301	

© National Gypsum Properties, LLC

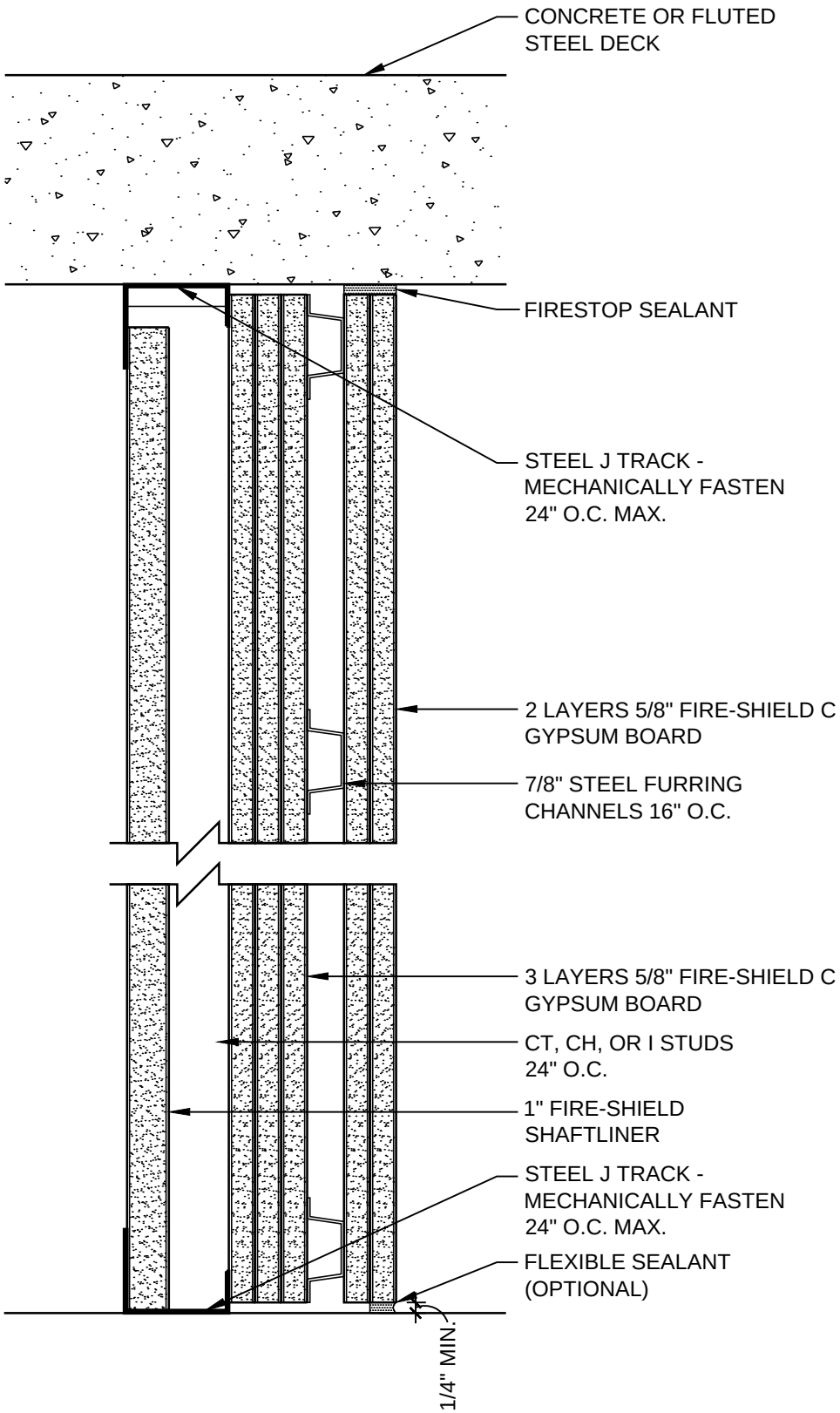

PARTITION - 4 HR
UL DESIGN: V451
UL DESIGN: W419

DATE: 11/05/13	4 HOUR SHAFTWALL PARTITION	National Gypsum
SCALE: 3"=1'-0"	DETAIL: SW 401	

© National Gypsum Properties, LLC

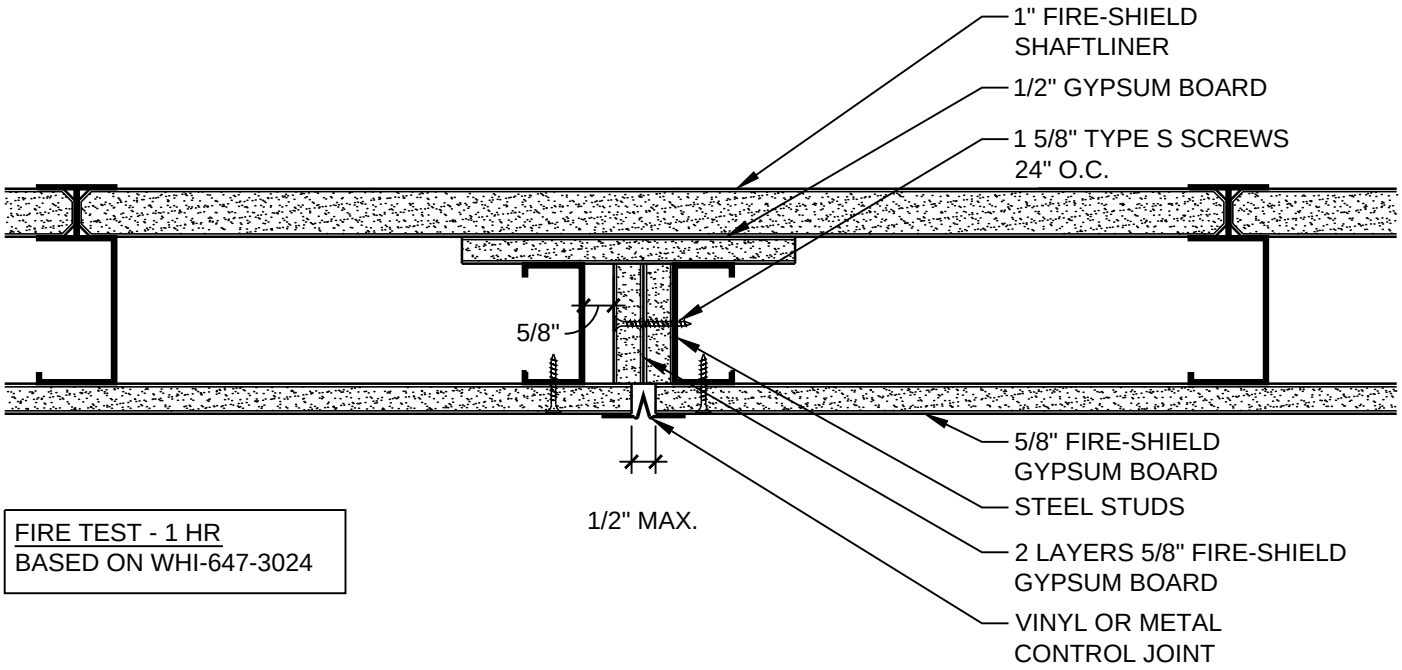

FIRE TEST - 1 HR
BASED ON WHI-647-3024

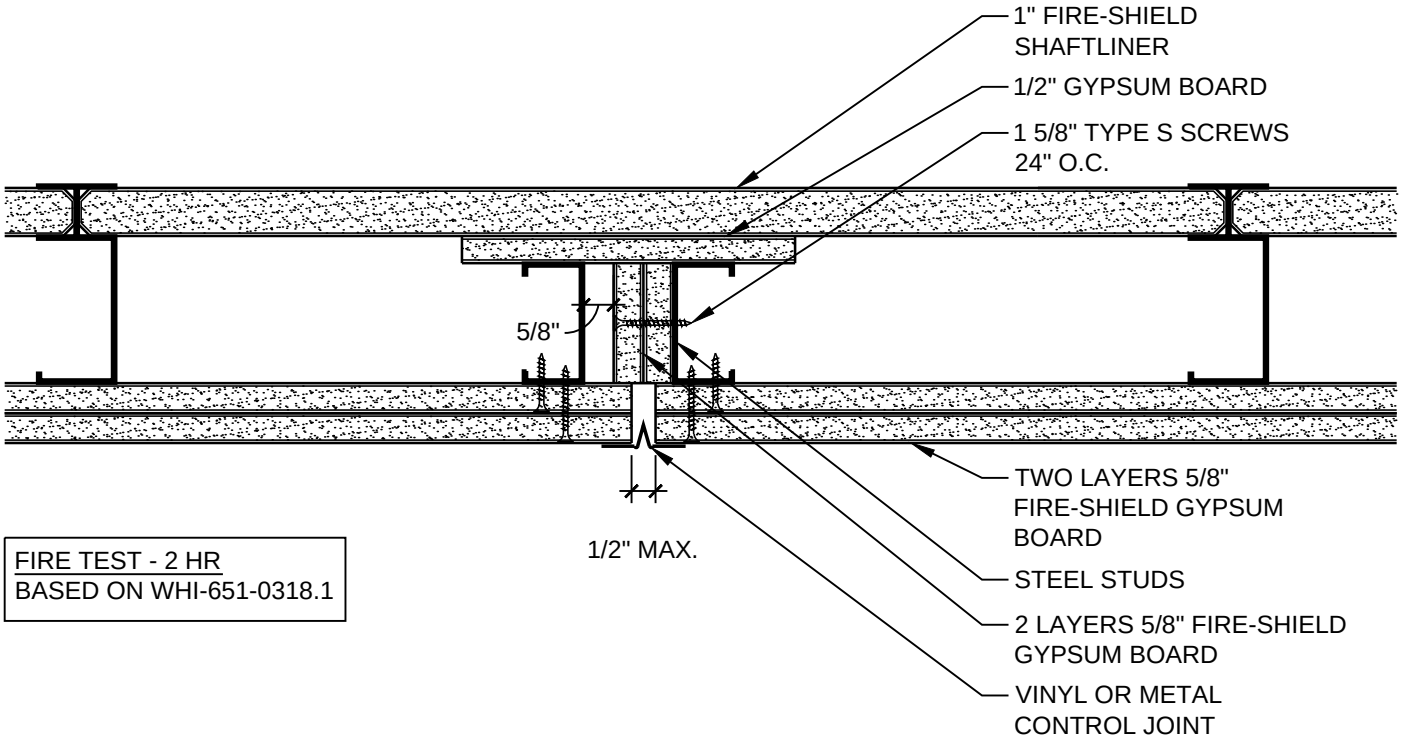

FIRE TEST - 2 HR
BASED ON WHI-651-0318.1

DATE: 11/05/13	CONTROL JOINTS FOR SHAFTWALL SYSTEMS	National Gypsum
SCALE: 3"=1'-0"	DETAIL: SW 501	

© National Gypsum Properties, LLC

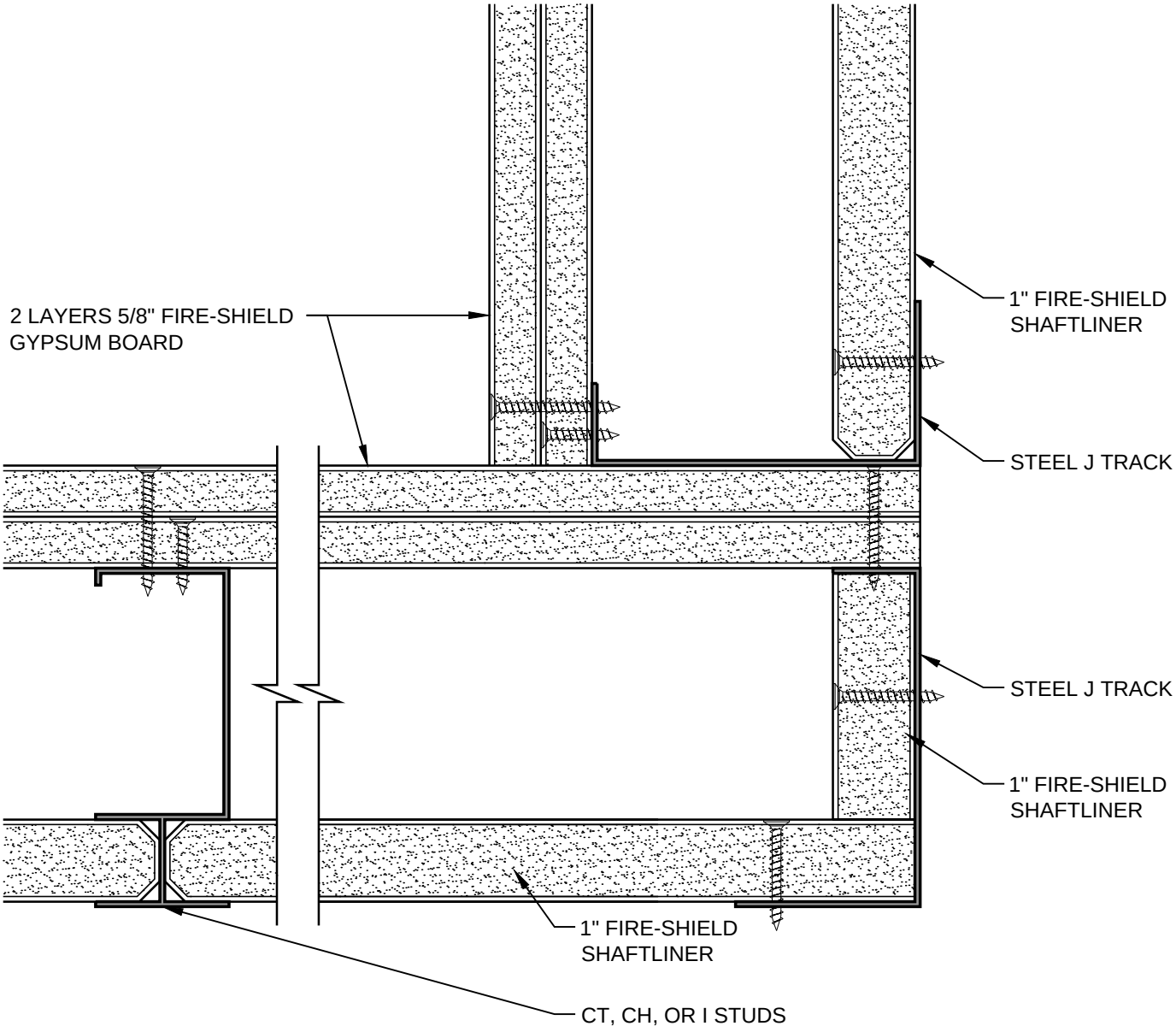

DATE: 11/05/13	2 HOUR SHAFTWALL CORNER DETAIL	National Gypsum
SCALE: 6"=1'-0"	DETAIL: SW 601	

© National Gypsum Properties, LLC

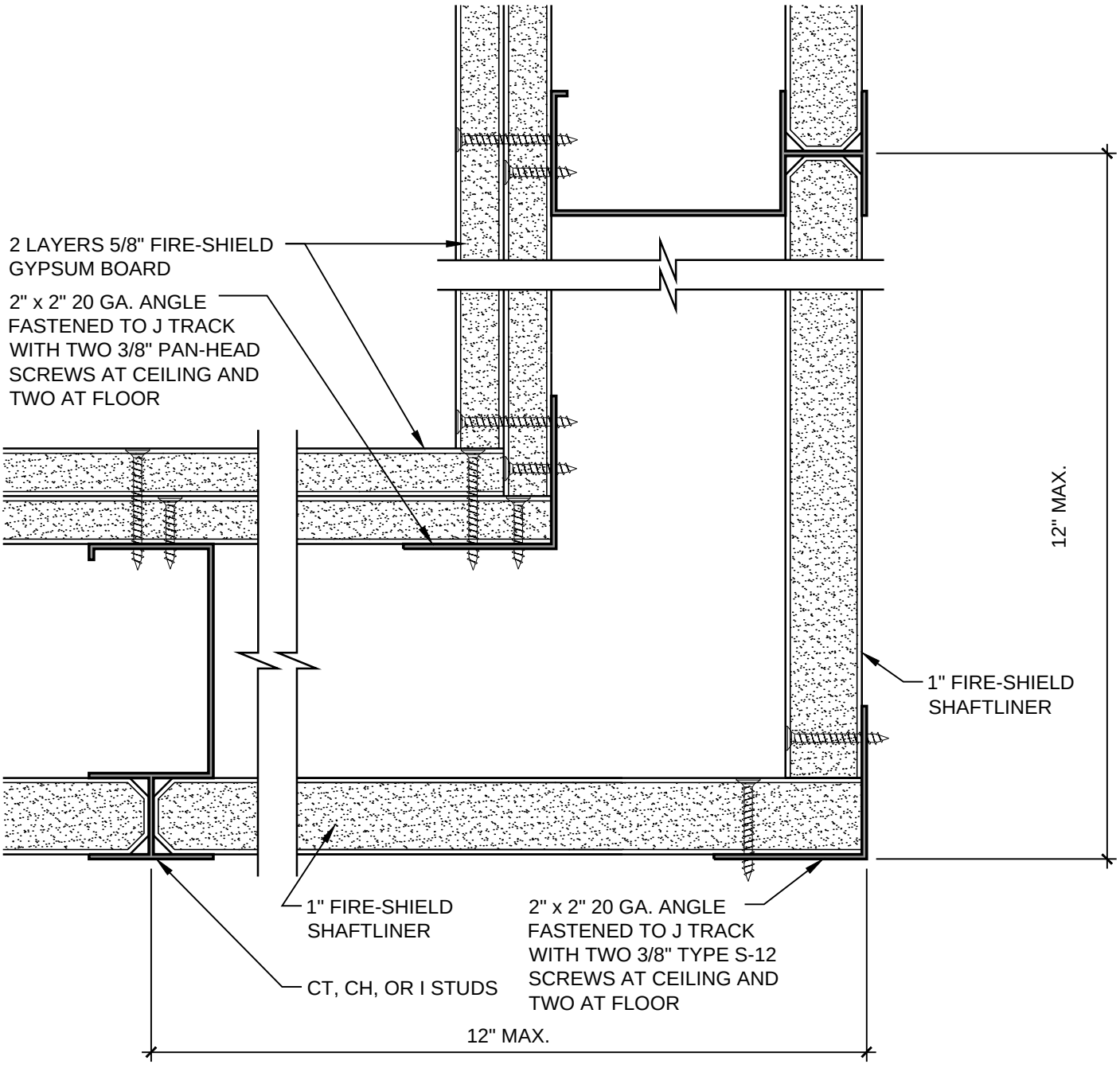

DATE: 11/05/13	2 HOUR SHAFTWALL CORNER DETAIL	National Gypsum
SCALE: 6"=1'-0"	DETAIL: SW 602	

© National Gypsum Properties, LLC

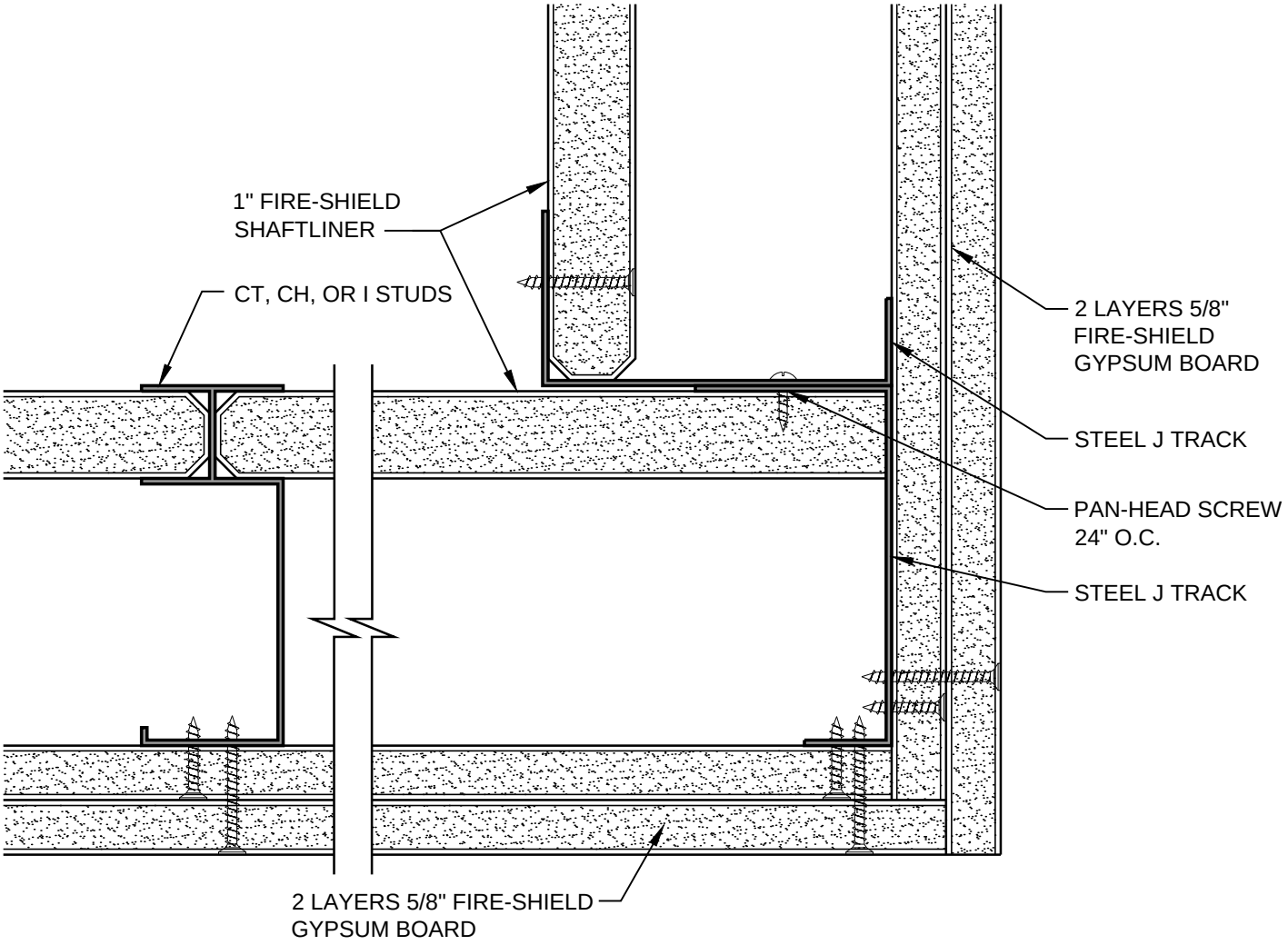

DATE: 11/05/13	2 HOUR SHAFTWALL CORNER DETAIL	National Gypsum
SCALE: 6"=1'-0"	DETAIL: SW 603	

© National Gypsum Properties, LLC

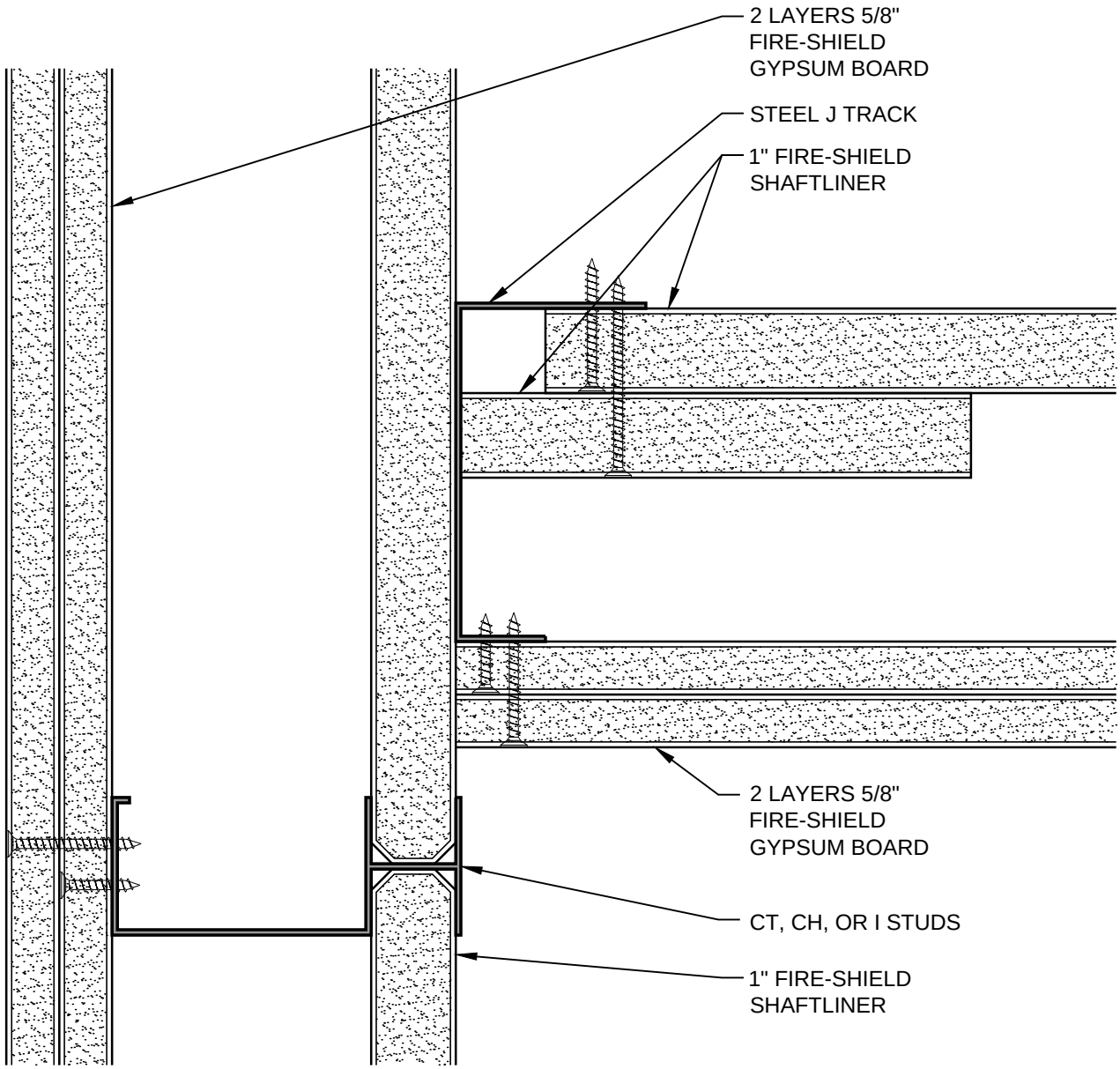

DATE: 11/05/13	2 HOUR SHAFTWALL CORNER DETAIL	National Gypsum
SCALE: 6"=1'-0"	DETAIL: SW 604	

© National Gypsum Properties, LLC

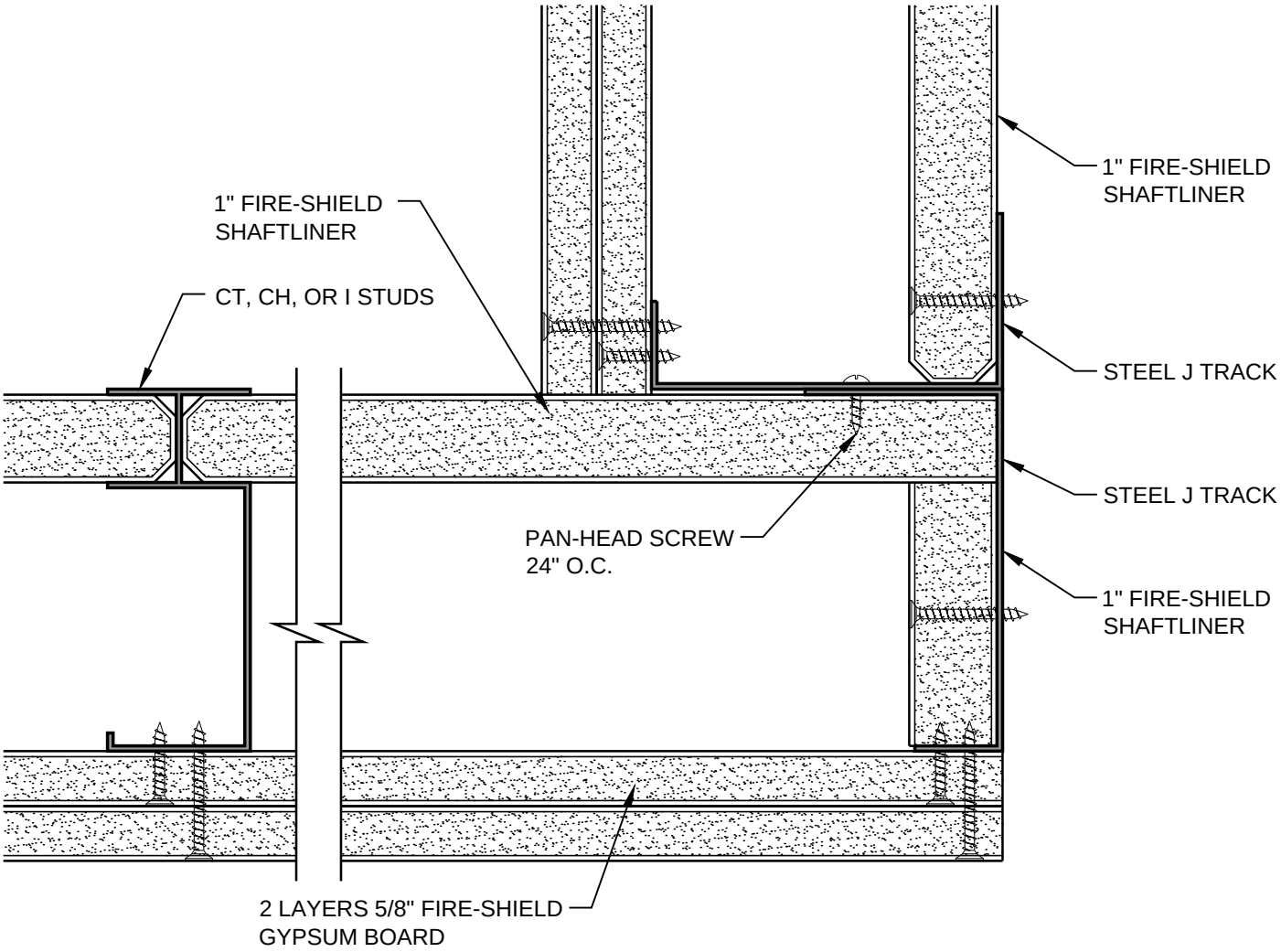

DATE: 11/05/13	2 HOUR SHAFTWALL CORNER DETAIL	National Gypsum
SCALE: 6"=1'-0"	DETAIL: SW 605	

© National Gypsum Properties, LLC

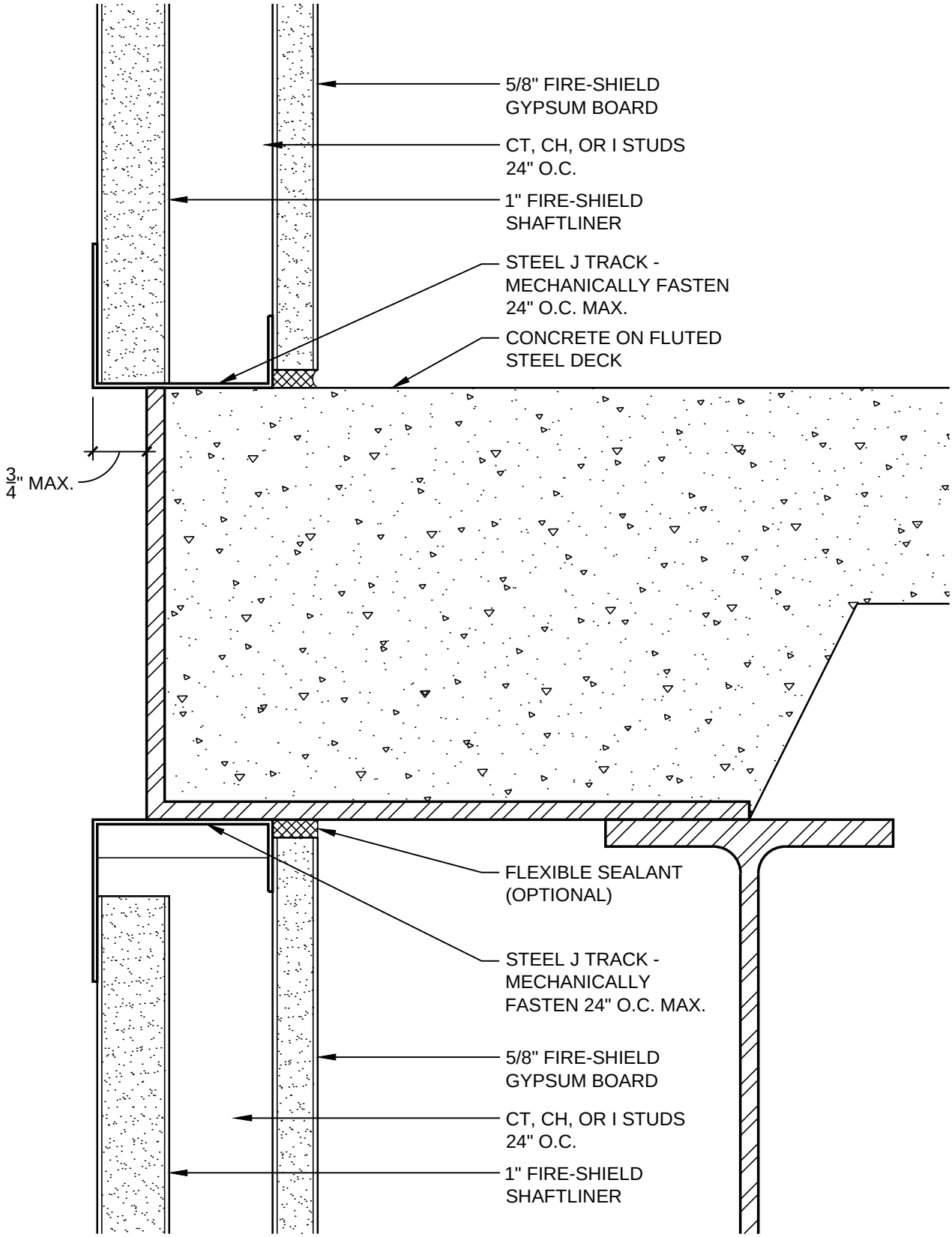

DATE: 11/05/13	SHAFTWALL OVERHANG AT SLAB EDGE	National Gypsum
SCALE: 6"=1'-0"	DETAIL: SW 606	

© National Gypsum Properties, LLC

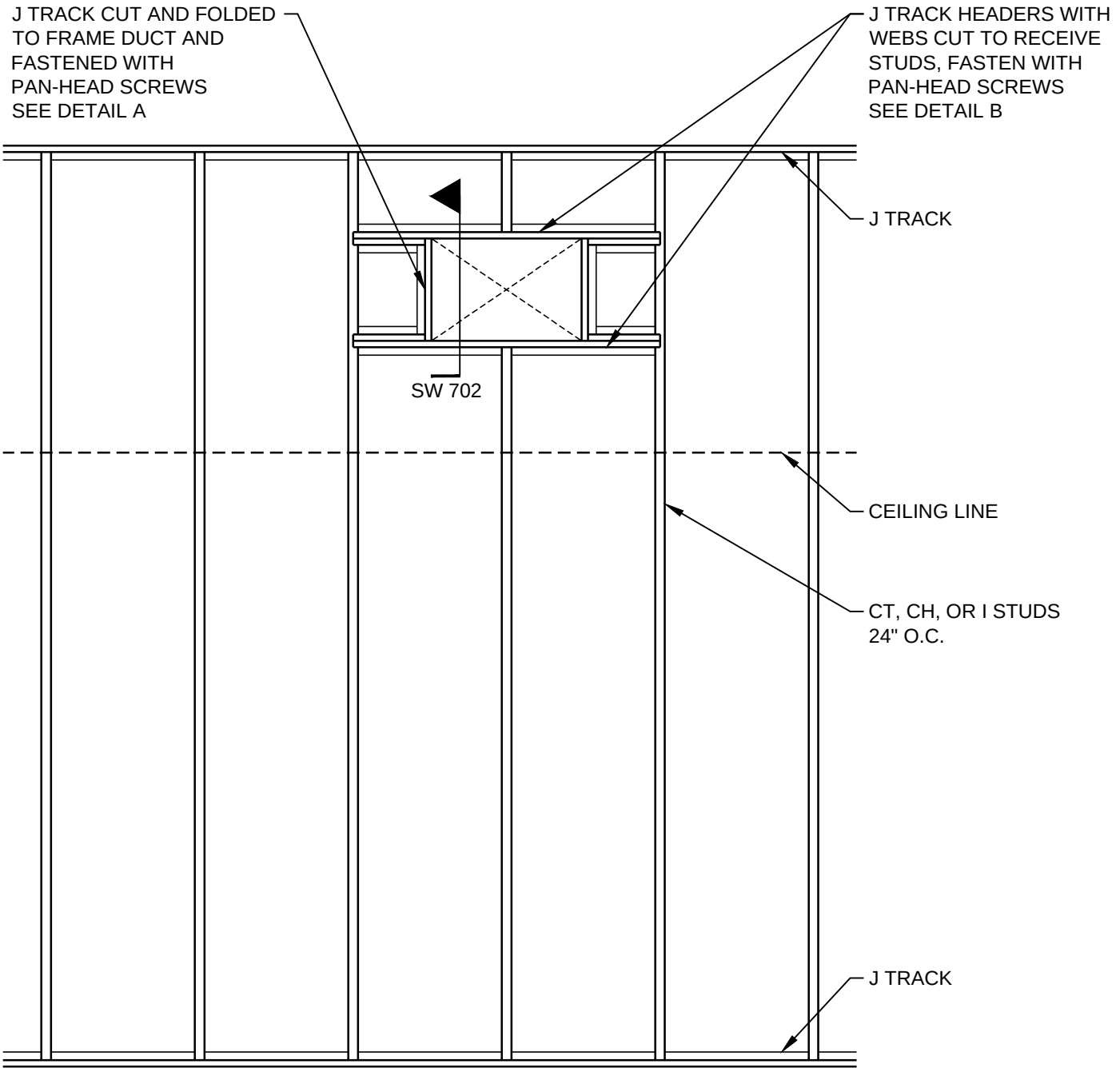

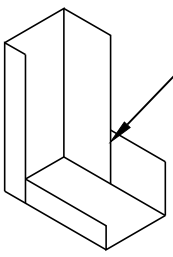

J TRACK CUT AND FOLDED TO FRAME DUCT AND FASTENED WITH PAN-HEAD SCREWS

DETAIL A

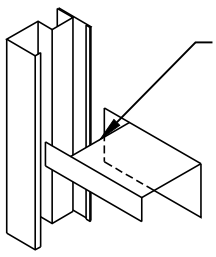

CUT WEB FROM J TRACK TO RECEIVE CT STUD, FASTEN WITH PAN-HEAD SCREWS

DETAIL B

DATE: 11/05/13	SHAFTWALL FRAMING AT DUCT PENETRATION	National Gypsum
SCALE: 1/2"=1'-0"	DETAIL: SW 701	

© National Gypsum Properties, LLC

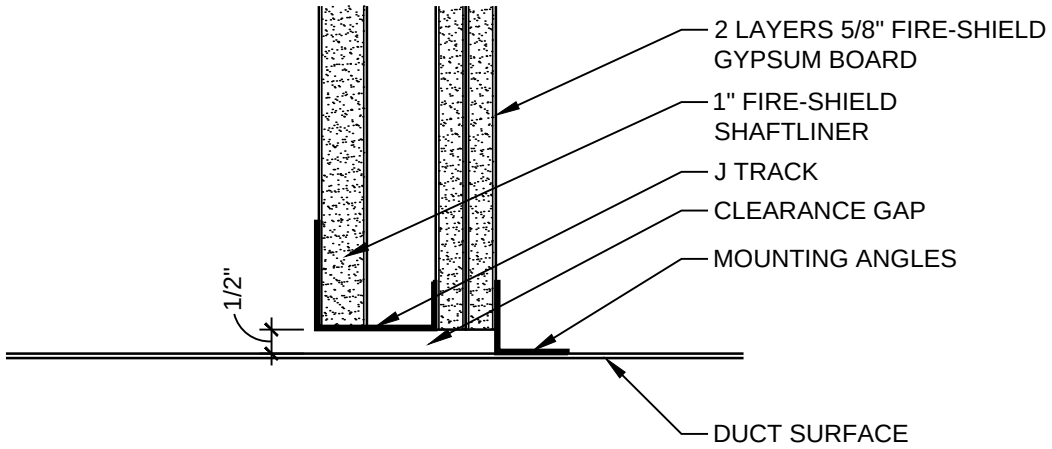

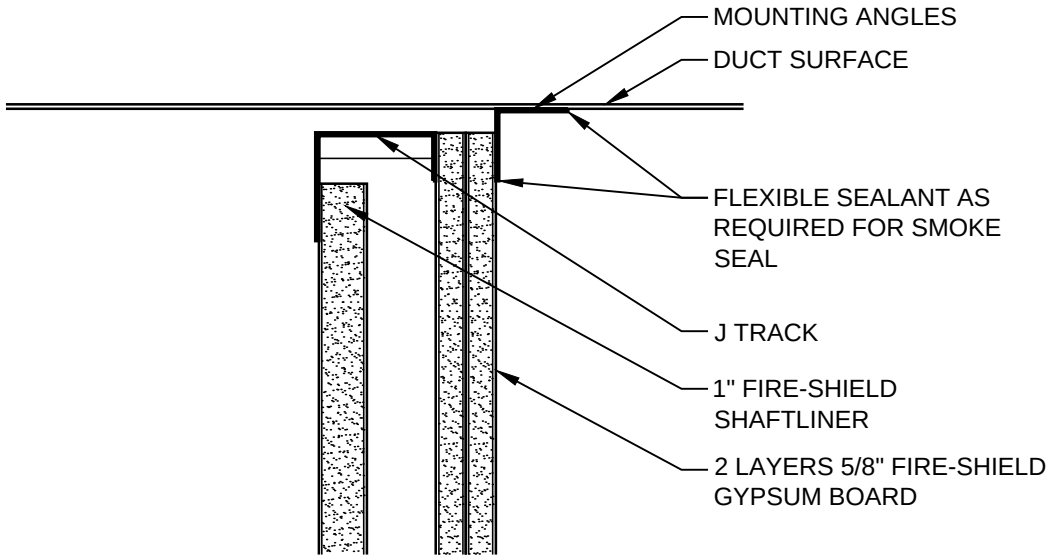

DATE: 11/05/13	2 HOUR SHAFTWALL WITH DUCT PENETRATION	National Gypsum
SCALE: 3"=1'-0"	DETAIL: SW 702	

© National Gypsum Properties, LLC

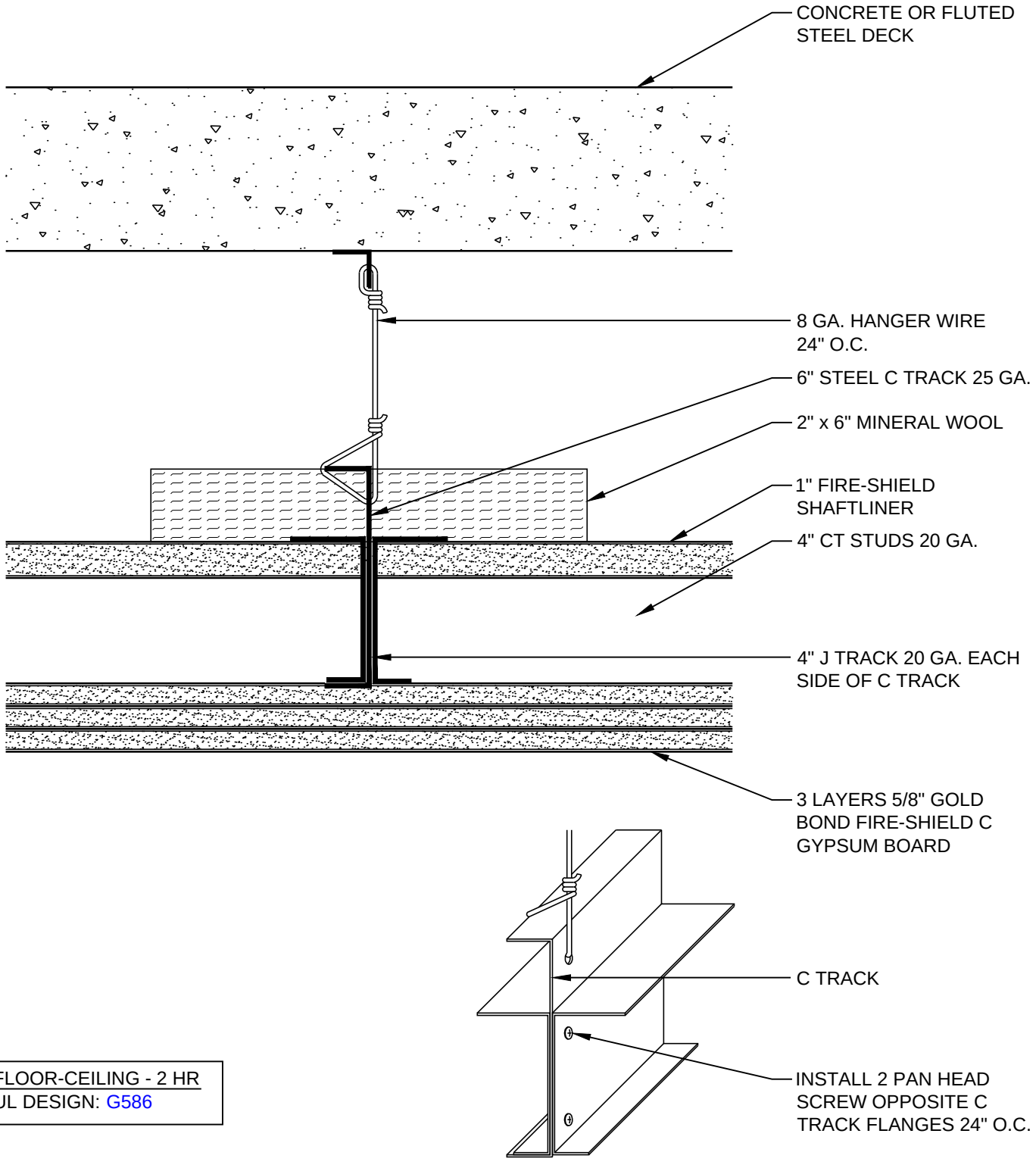

FLOOR-CEILING - 2 HR
UL DESIGN: G586

HANGER ASSEMBLY DETAIL
(REQUIRED FOR SPANS GREATER THAN 8'-0")

DATE: 11/05/13	2 HOUR HORIZONTAL SHAFTWALL	National Gypsum
SCALE: 3"=1'-0"	DETAIL: SW 703	

© National Gypsum Properties, LLC

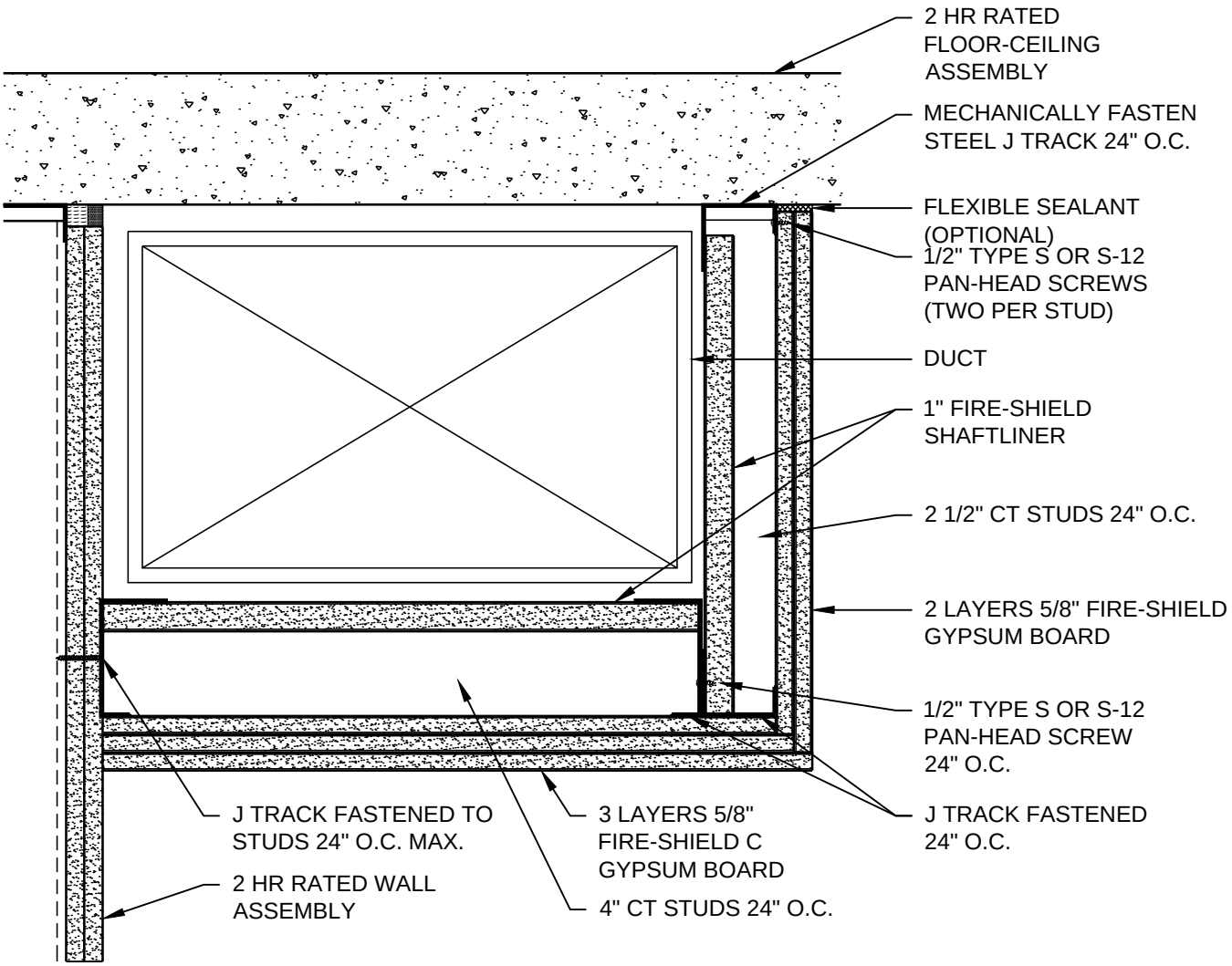

VERTICAL - 2 HR
UL DESIGN: U497
HORIZONTAL - 2 HR
UL DESIGN: G586

DATE: 11/05/13	2 HOUR HORIZONTAL DUCT PROTECTION	National Gypsum
SCALE: 2"=1'-0"	DETAIL: SW 704	

© National Gypsum Properties, LLC

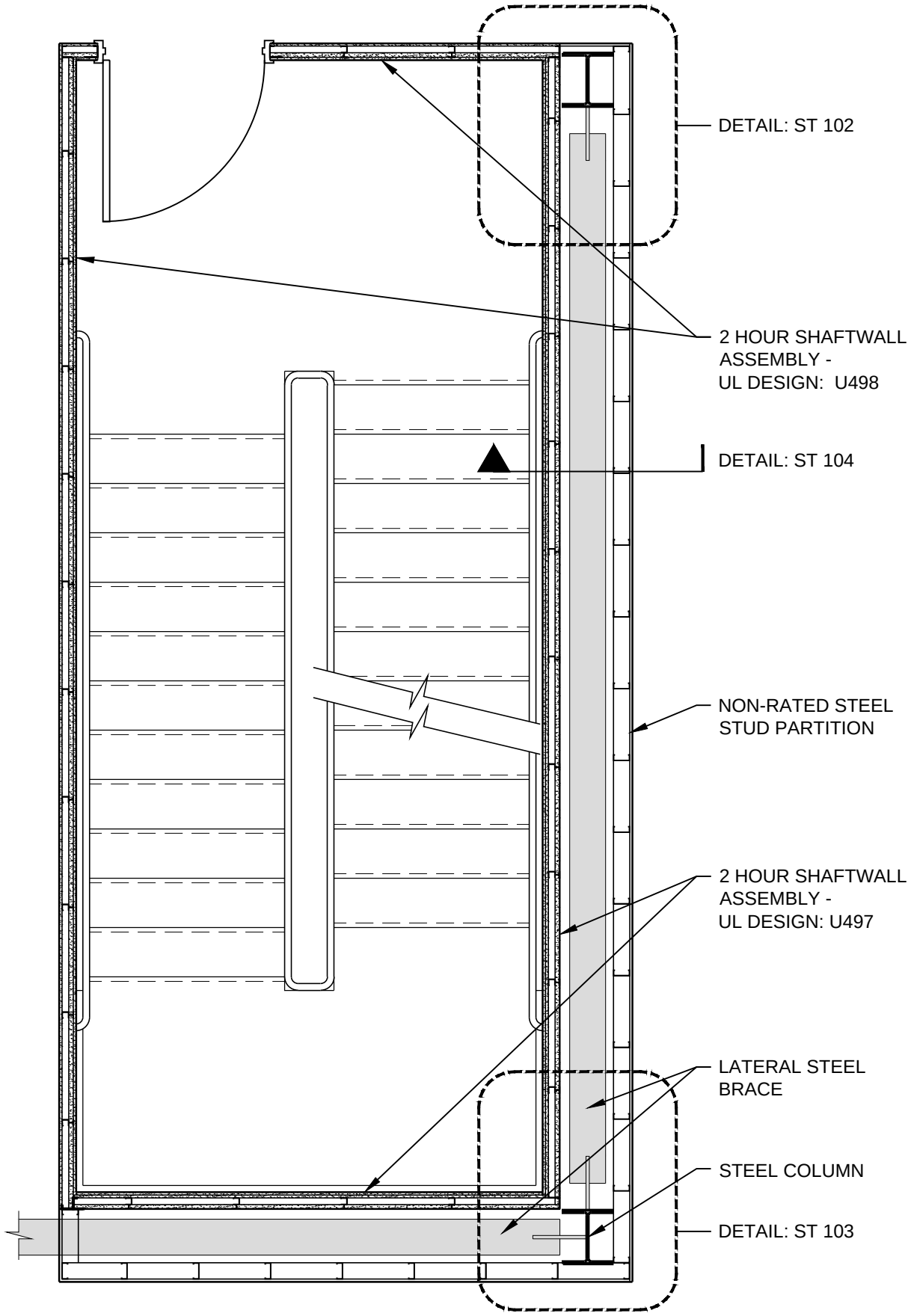

DATE: 11/05/13	FLOOR PLAN OF STAIR AT LATERAL BRACE	National Gypsum
SCALE: 3/8"=1'-0"	DETAIL: ST 101	

© National Gypsum Properties, LLC

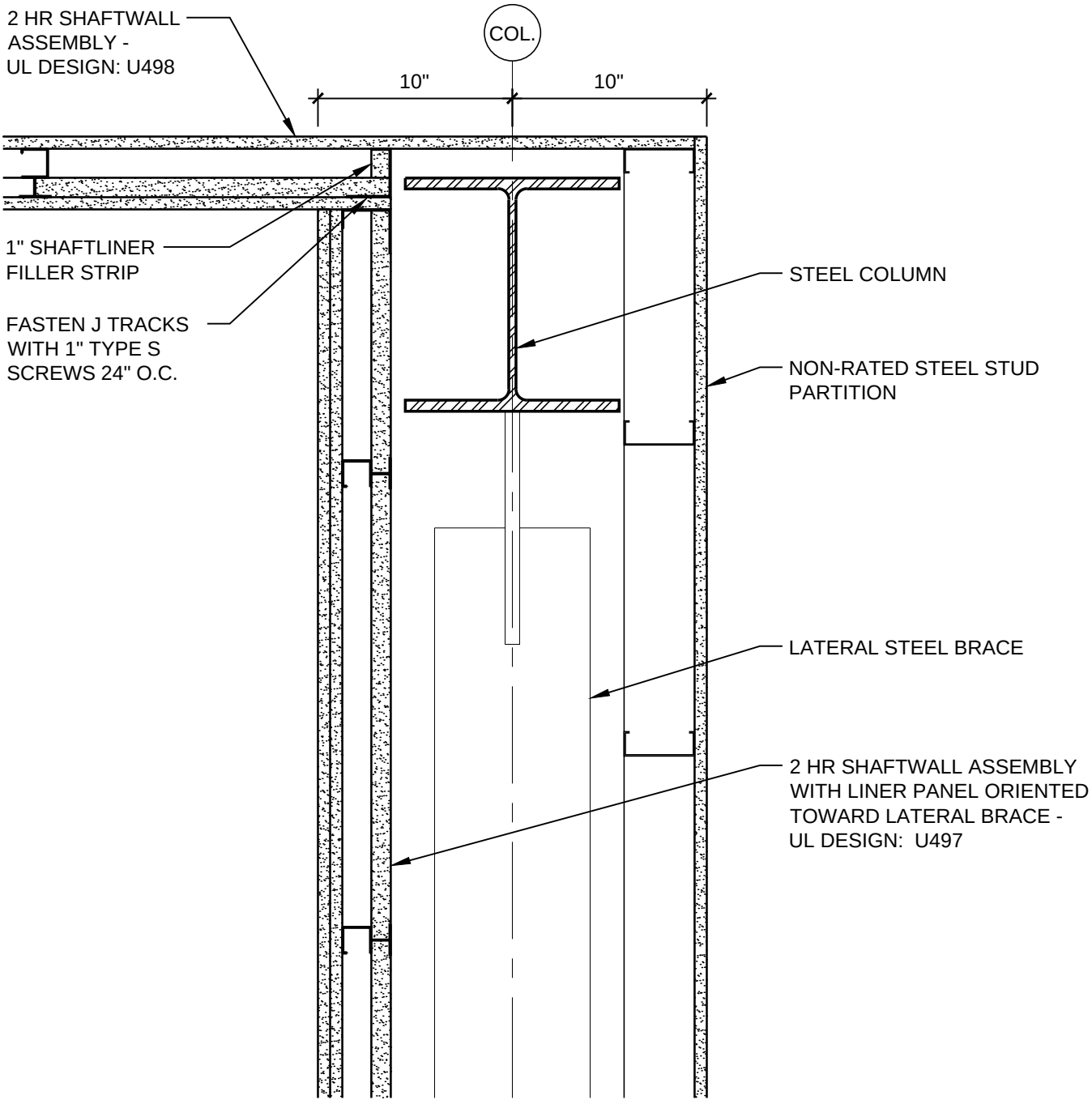

DATE: 11/05/13	STAIR SHAFTWALL CORNER AT LATERAL BRACE	National Gypsum
SCALE: 1 1/2"=1'-0"	DETAIL: ST 102	

© National Gypsum Properties, LLC

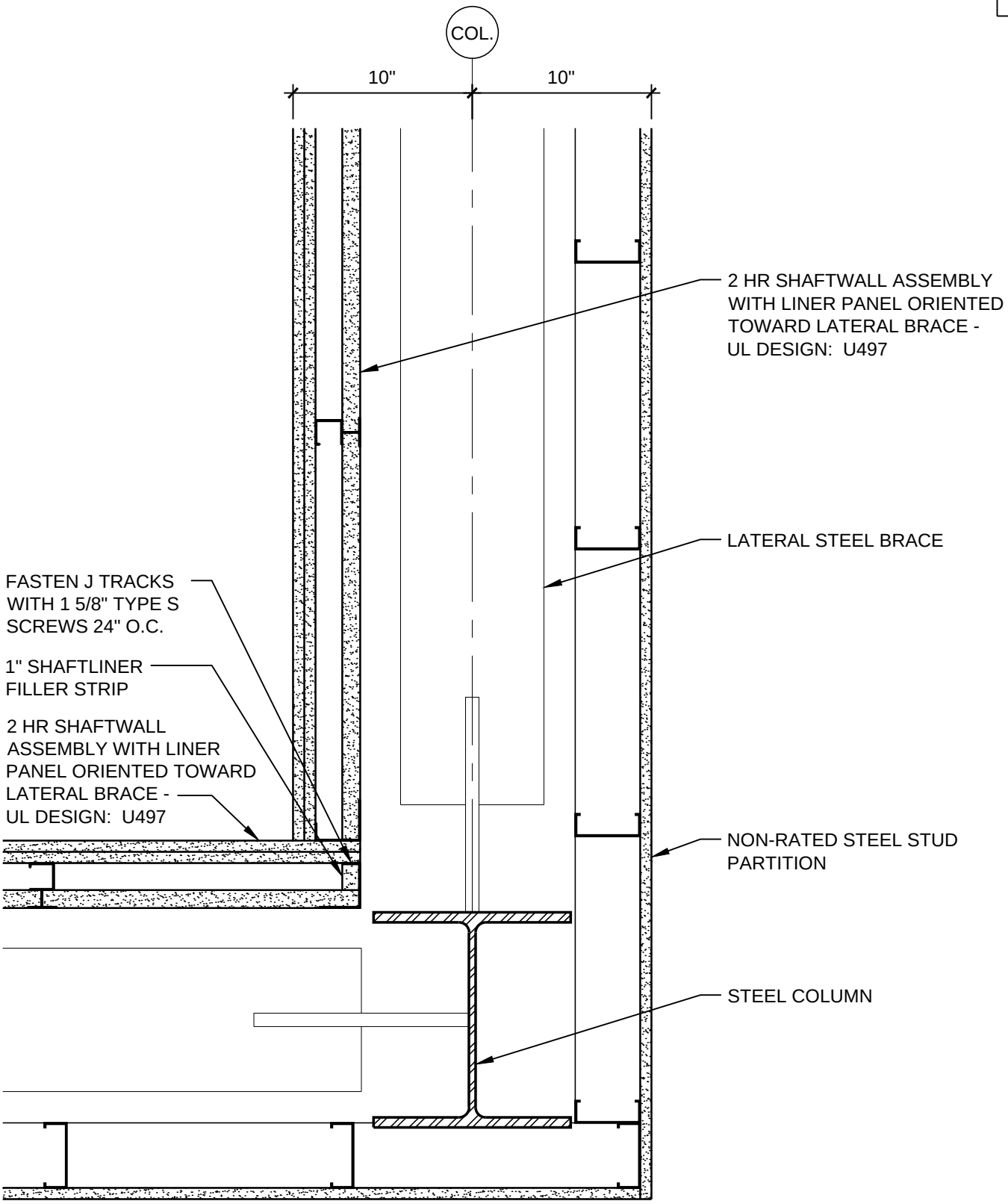

DATE: 11/05/13	STAIR SHAFTWALL CORNER AT LATERAL BRACE	National Gypsum
SCALE: 1 1/2"=1'-0"	DETAIL: ST 103	

© National Gypsum Properties, LLC

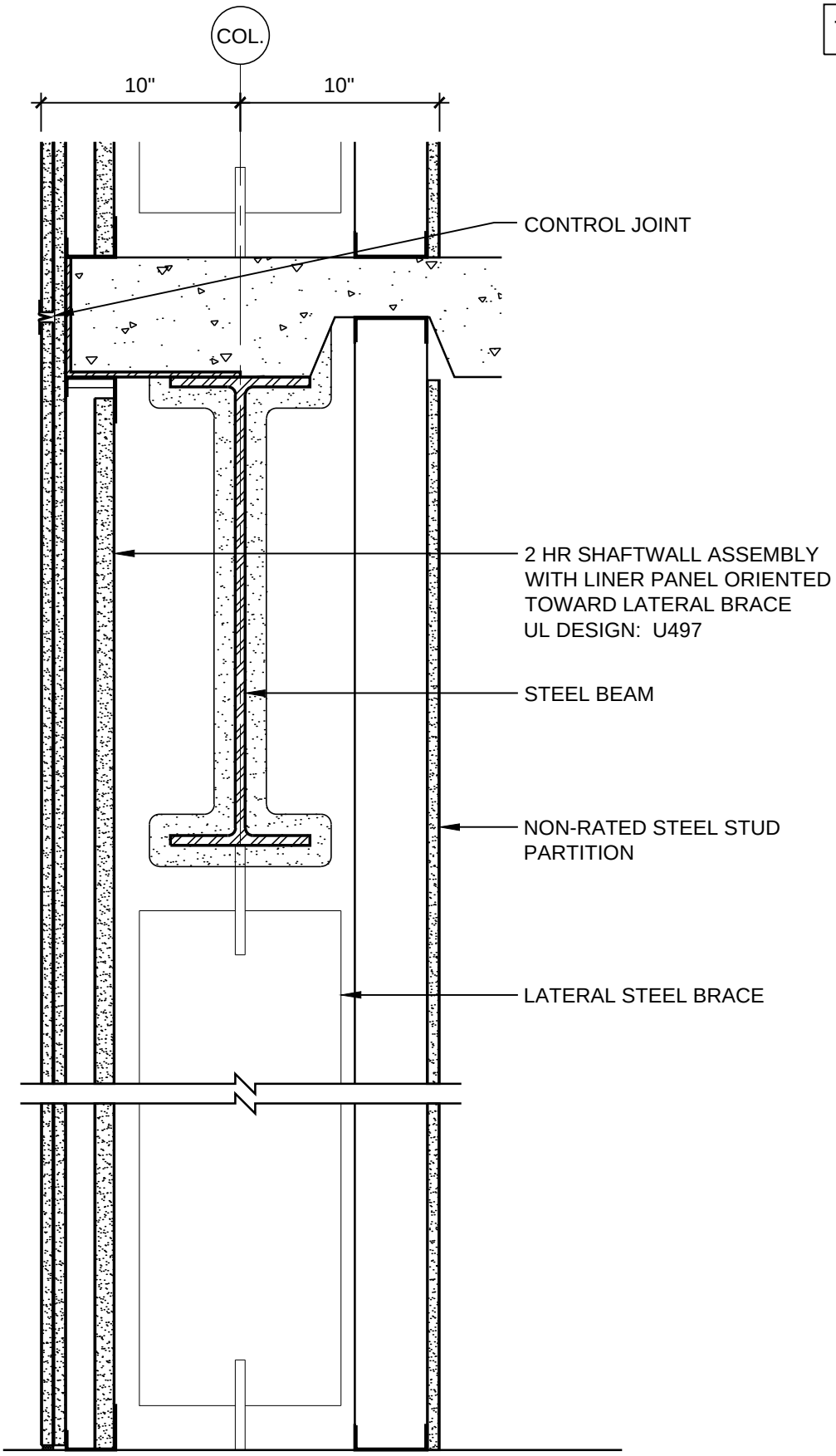

DATE: 11/05/13	STAIR SHAFTWALL SECTION AT LATERAL BRACE	National Gypsum
SCALE: 1 1/2"=1'-0"	DETAIL: ST 104	

© National Gypsum Properties, LLC

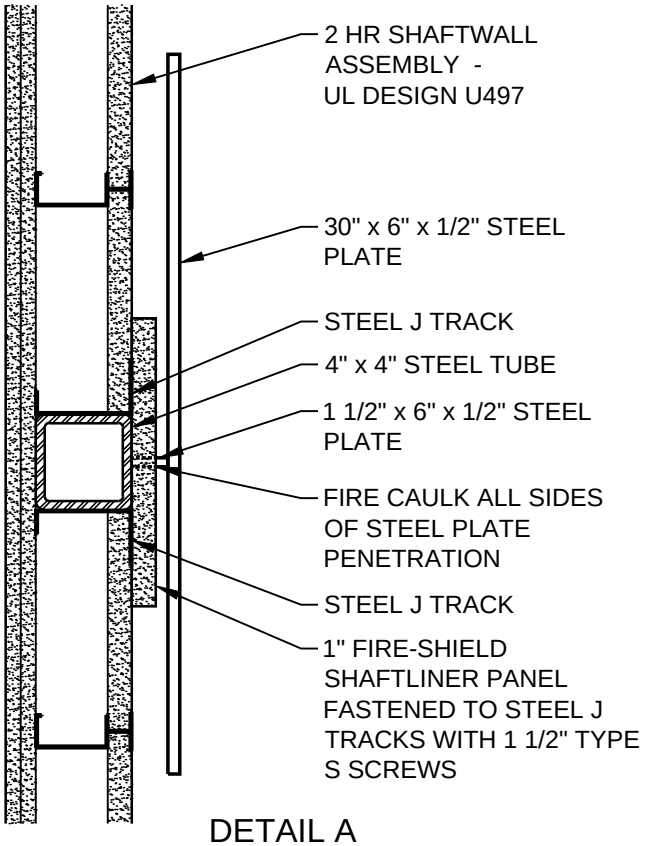

DETAIL A

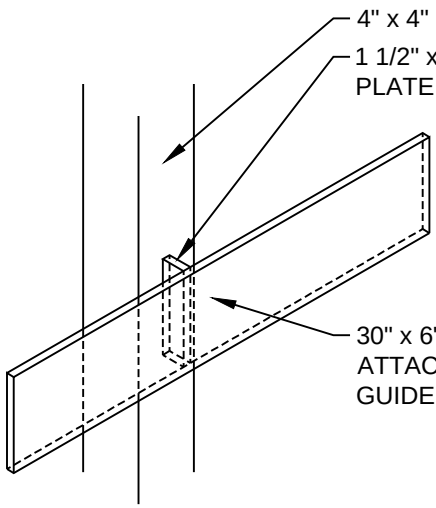

GUIDE RAIL BRACKET ASSEMBLY

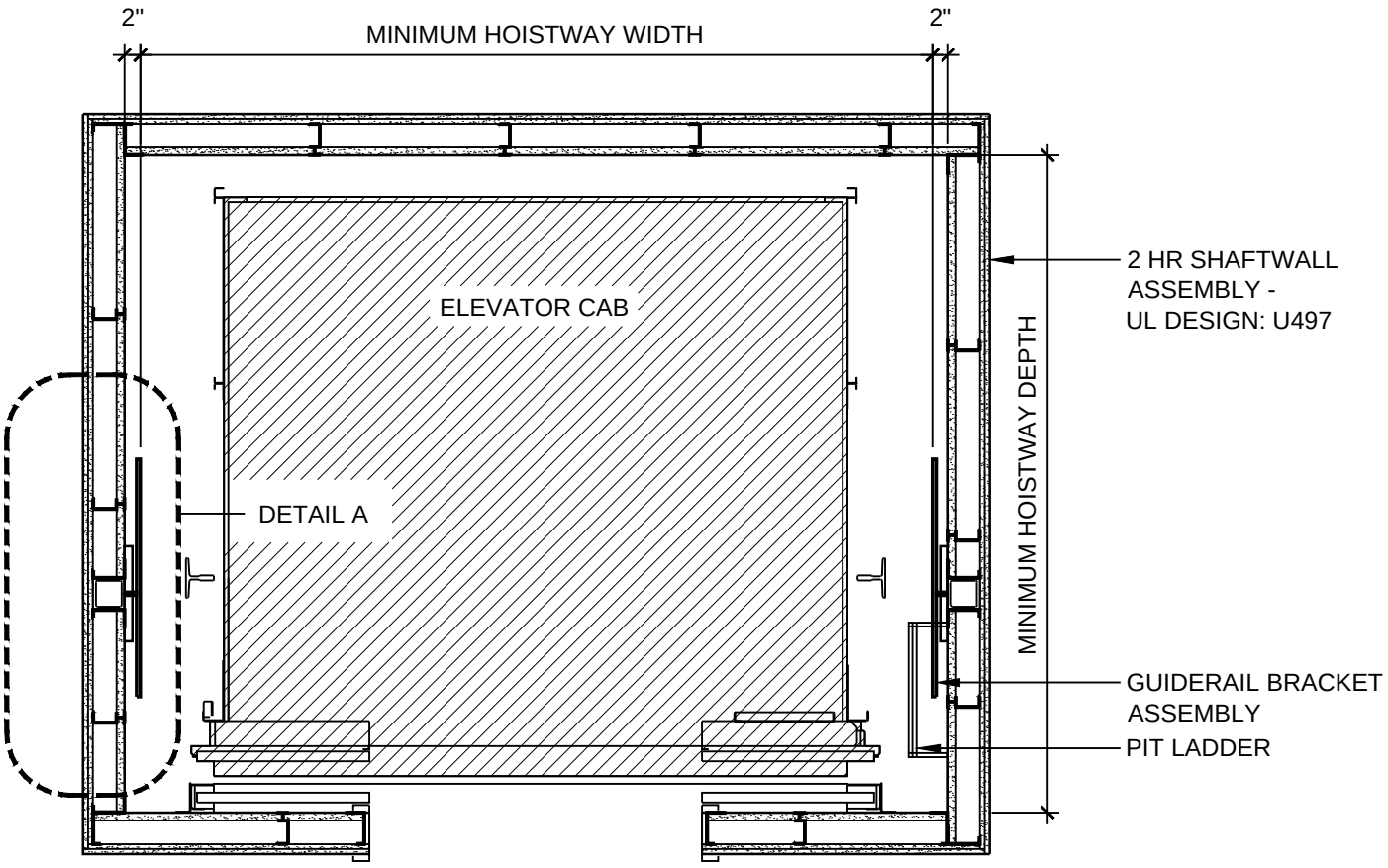

DATE: 11/05/13	ELEVATOR SHAFT ENCLOSURE PLAN	National Gypsum
SCALE: 1/2"=1'-0"	DETAIL: EV 101	

© National Gypsum Properties, LLC

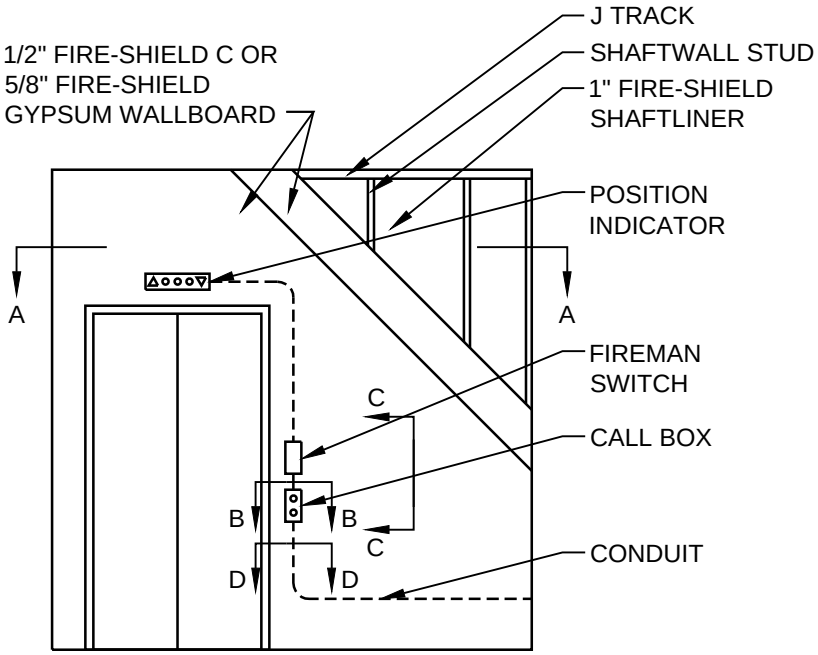

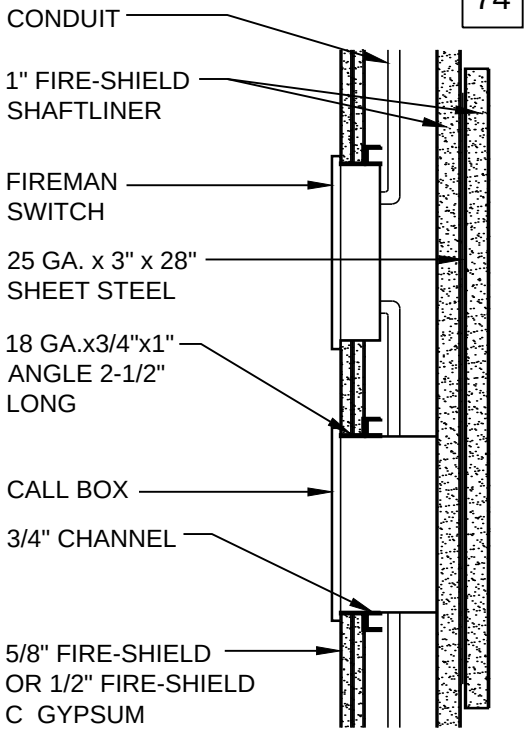

SECTION C-C

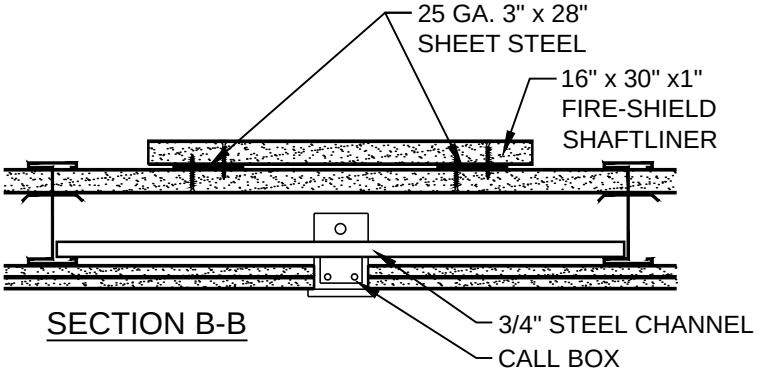

SECTION B-B

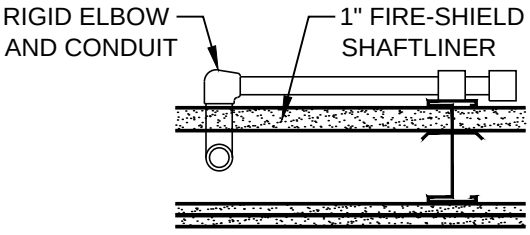

SECTION D-D

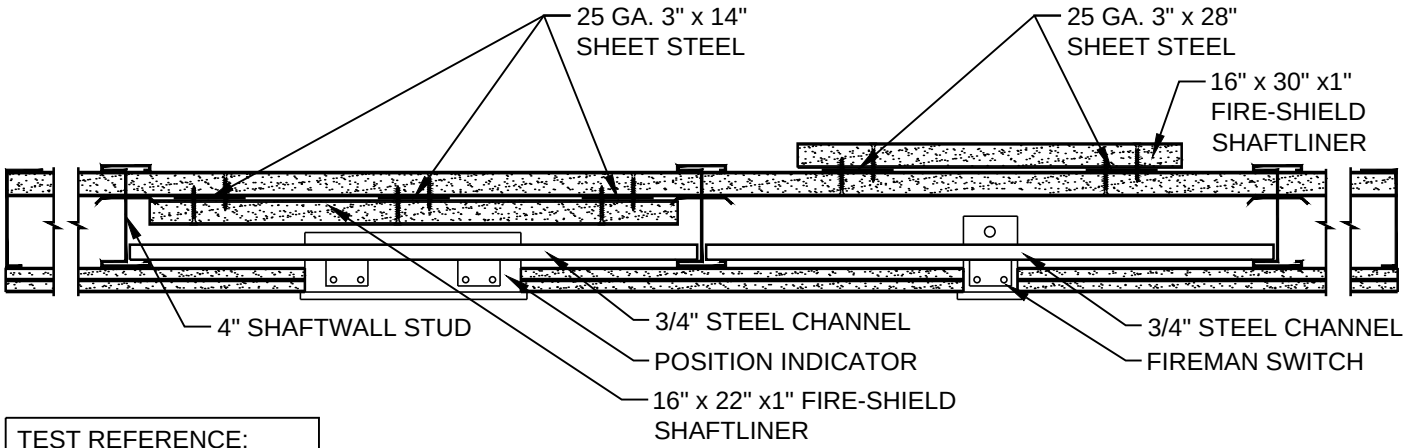

SECTION A-A

TEST REFERENCE:
FM WP-612
FM WP-621

DATE: 11/05/13	POSITION INDICATOR AND CONTROL BOX PROTECTION IN ELEVATOR SHAFTWALL	National Gypsum
SCALE: 1 1/2"=1'-0"	DETAIL: EV 102	

© National Gypsum Properties, LLC

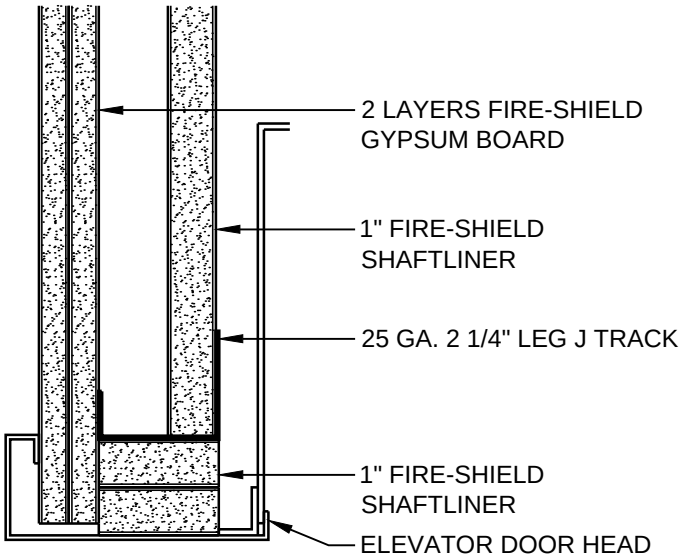

ELEVATOR DOOR HEAD

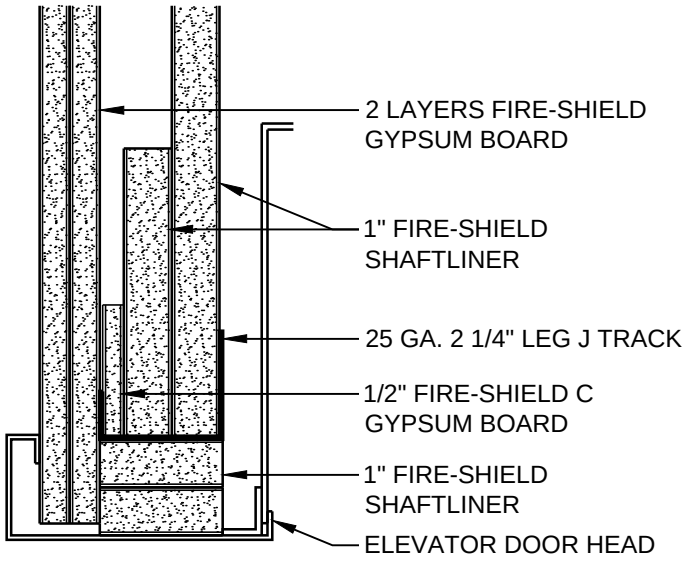

ELEVATOR DOOR HEAD
(FOR ELEVATOR DOORS < 7'-0")

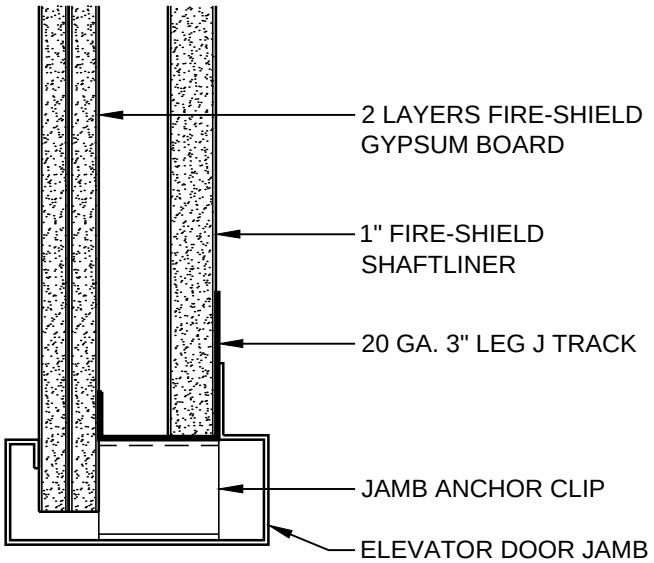

ELEVATOR DOOR JAMB

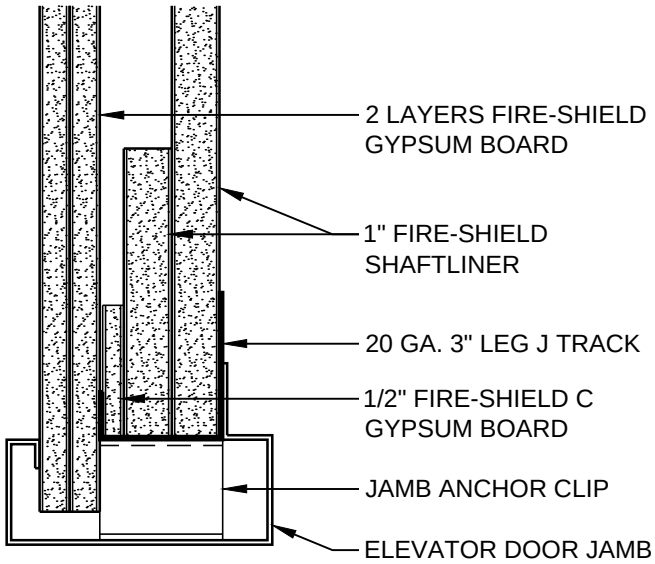

ELEVATOR DOOR JAMB
(FOR ELEVATOR DOORS < 7'-0")

DATE: 11/05/13	ELEVATOR SHAFTWALL HEAD AND JAMB DETAILS	National Gypsum
SCALE: 3"=1'-0"	DETAIL: EV 103	

© National Gypsum Properties, LLC

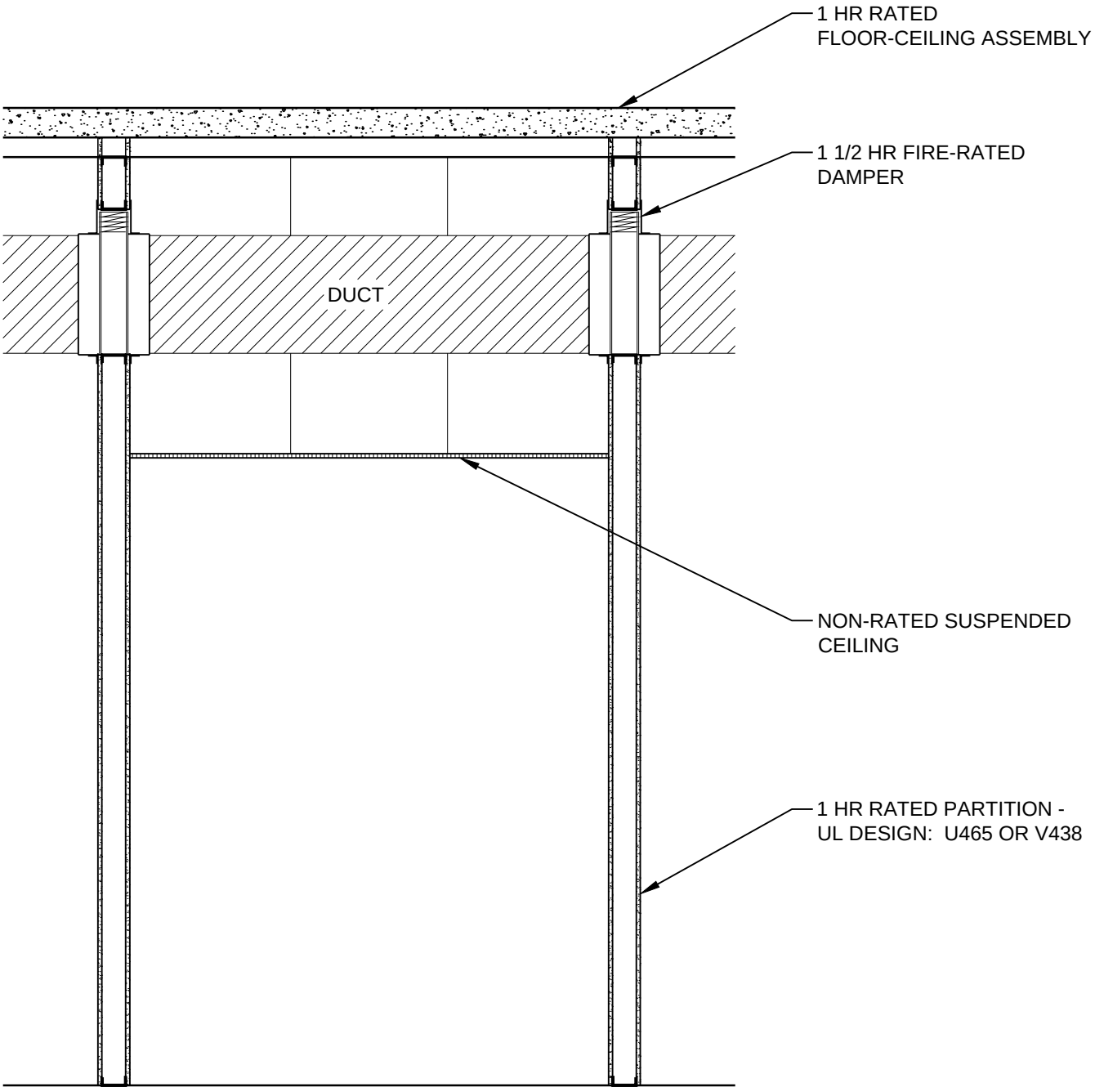

DATE: 11/05/13	1 HOUR CORRIDOR ASSEMBLY	National Gypsum
SCALE: 1/2"=1'-0"	DETAIL: CR 101	

© National Gypsum Properties, LLC

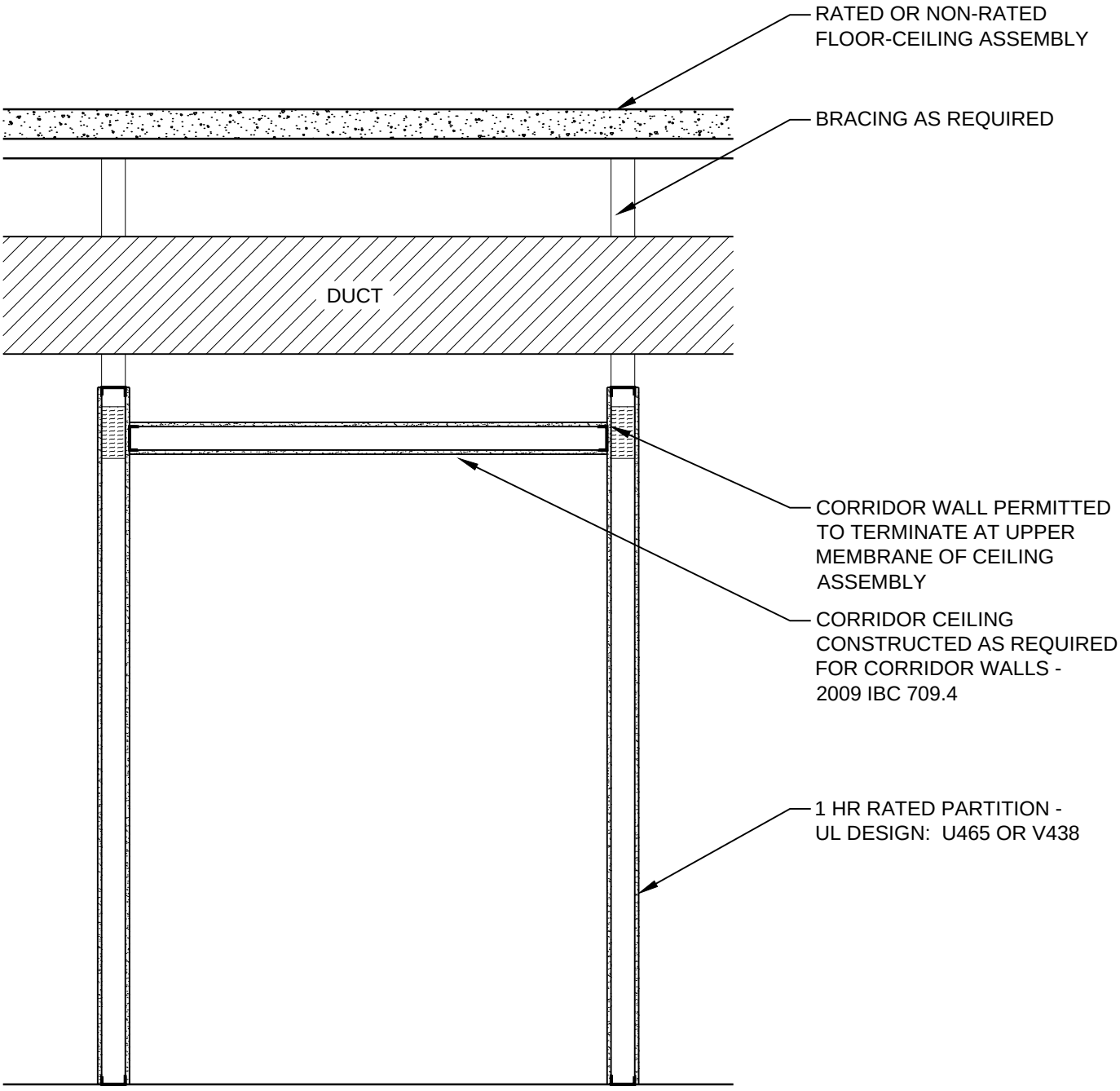

DATE: 11/05/13	1 HOUR CORRIDOR ASSEMBLY	National Gypsum
SCALE: 1/2"=1'-0"	DETAIL: CR 102	

© National Gypsum Properties, LLC

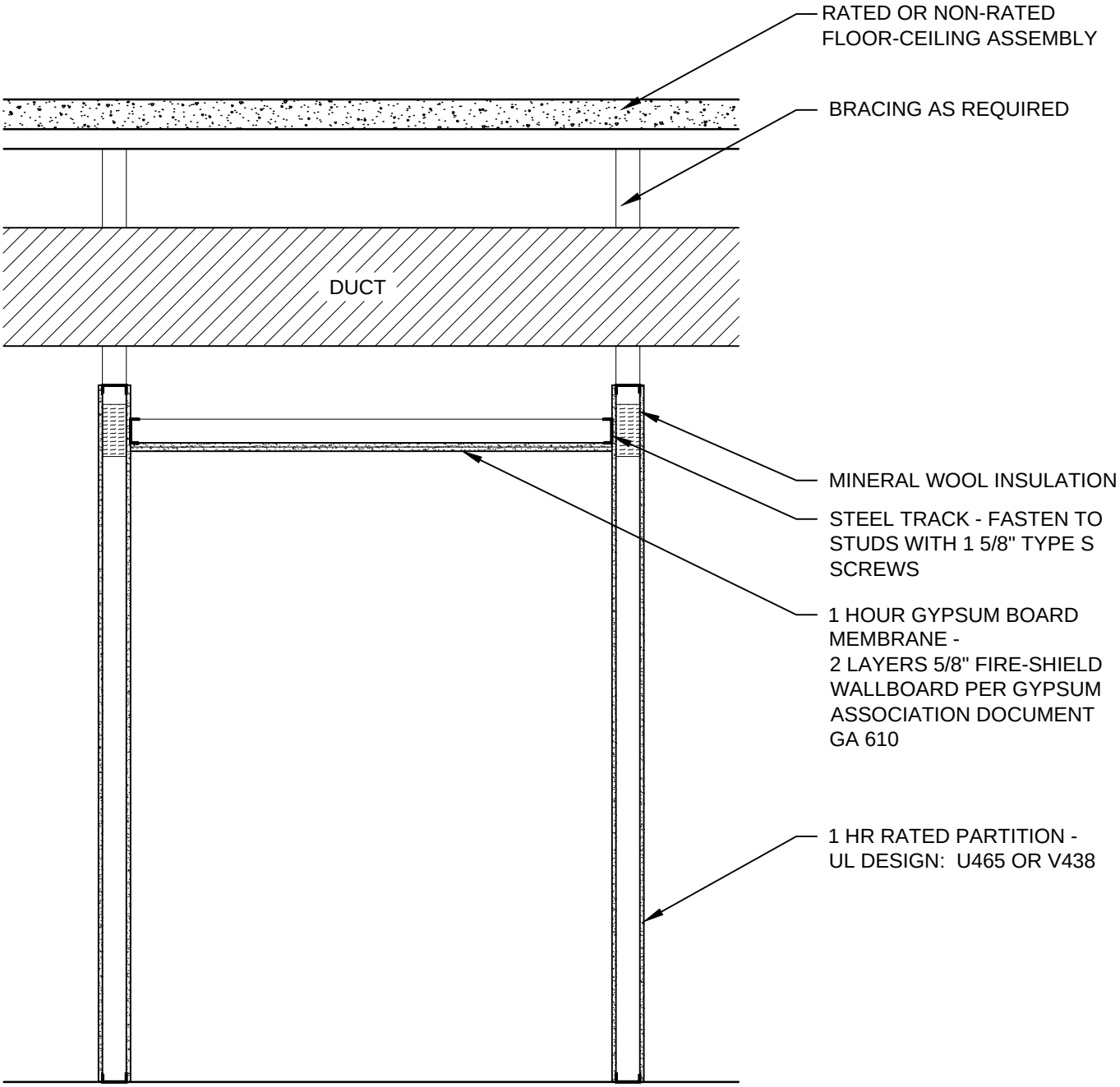

DATE: 11/05/13	1 HOUR CORRIDOR ASSEMBLY	National Gypsum
SCALE: 1/2"=1'-0"	DETAIL: CR 103	

© National Gypsum Properties, LLC

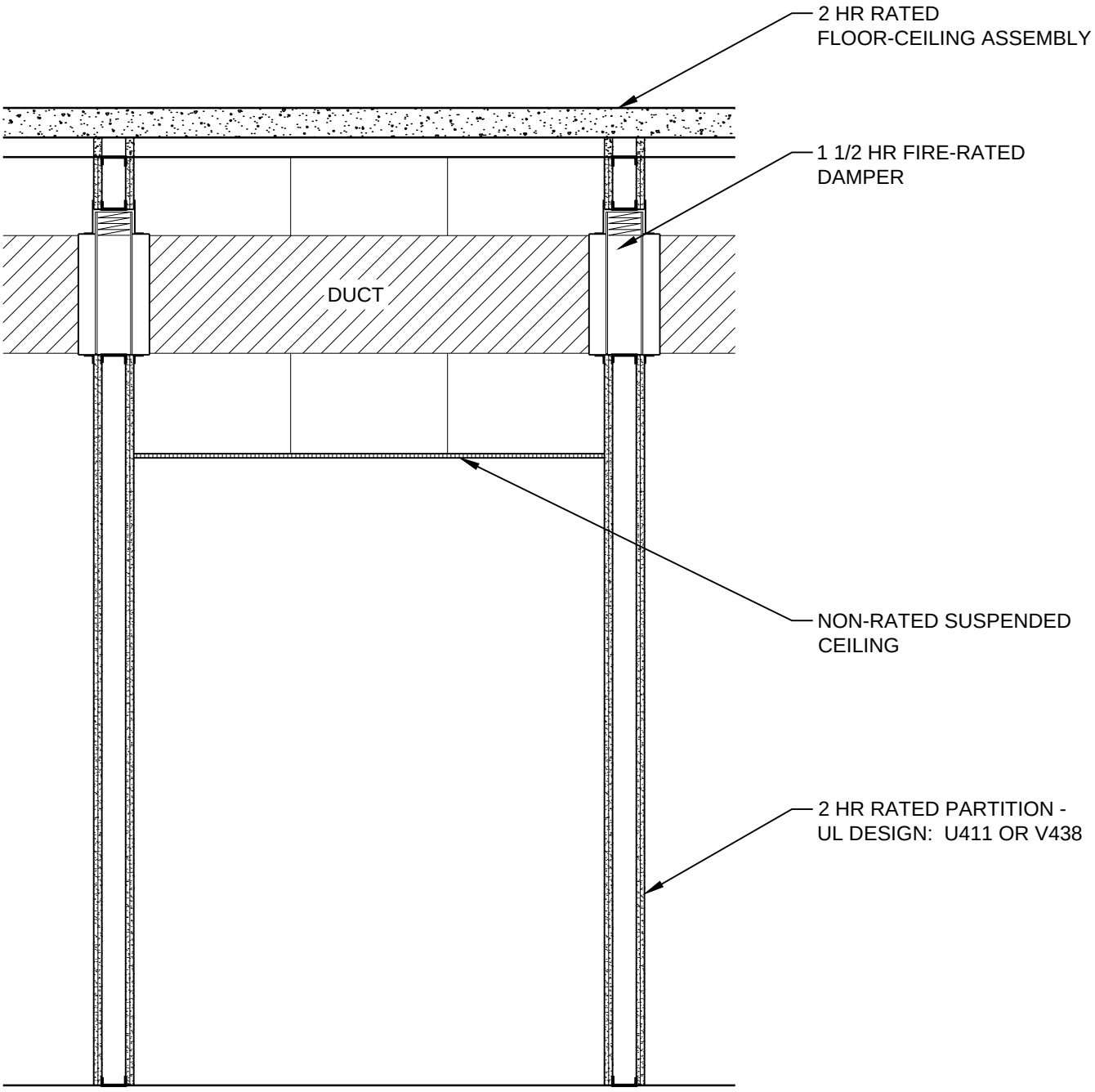

DATE: 11/05/13	2 HOUR CORRIDOR ASSEMBLY	National Gypsum
SCALE: 1/2"=1'-0"	DETAIL: CR 201	

© National Gypsum Properties, LLC

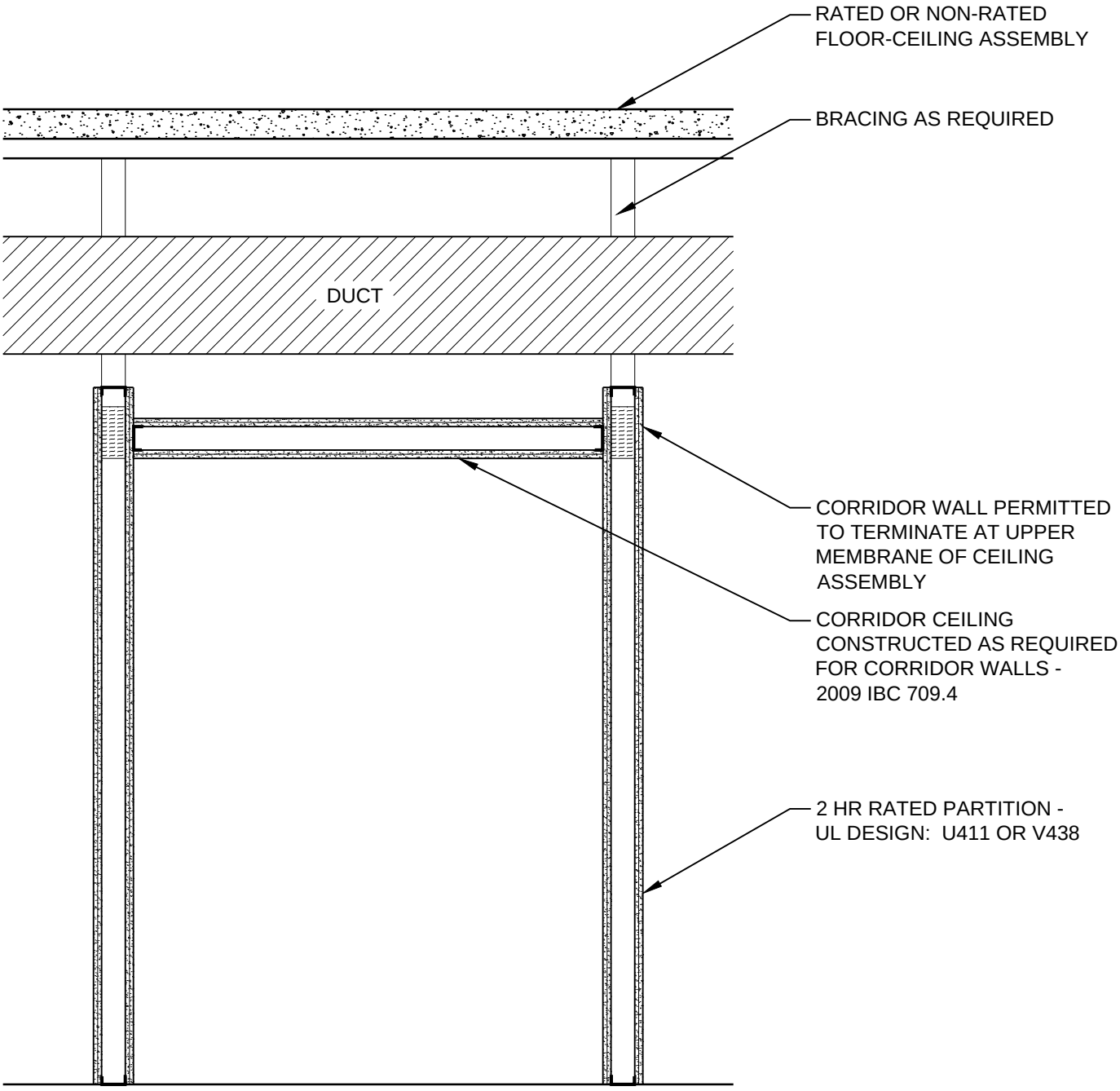

DATE: 11/05/13	2 HOUR CORRIDOR ASSEMBLY	National Gypsum
SCALE: 1/2"=1'-0"	DETAIL: CR 202	

© National Gypsum Properties, LLC

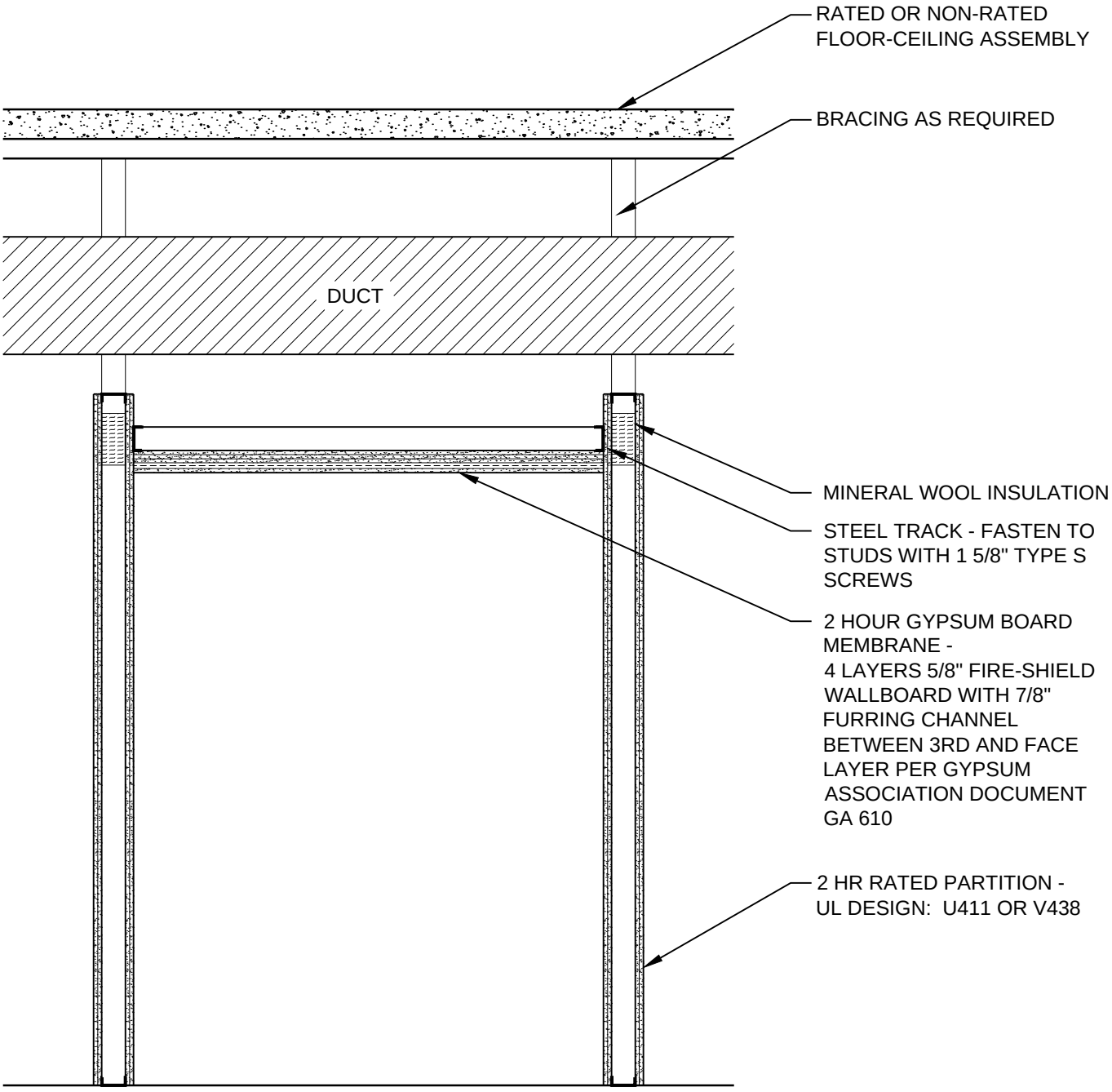

DATE: 11/05/13	2 HOUR CORRIDOR ASSEMBLY	National Gypsum
SCALE: 1/2"=1'-0"	DETAIL: CR 203	

© National Gypsum Properties, LLC

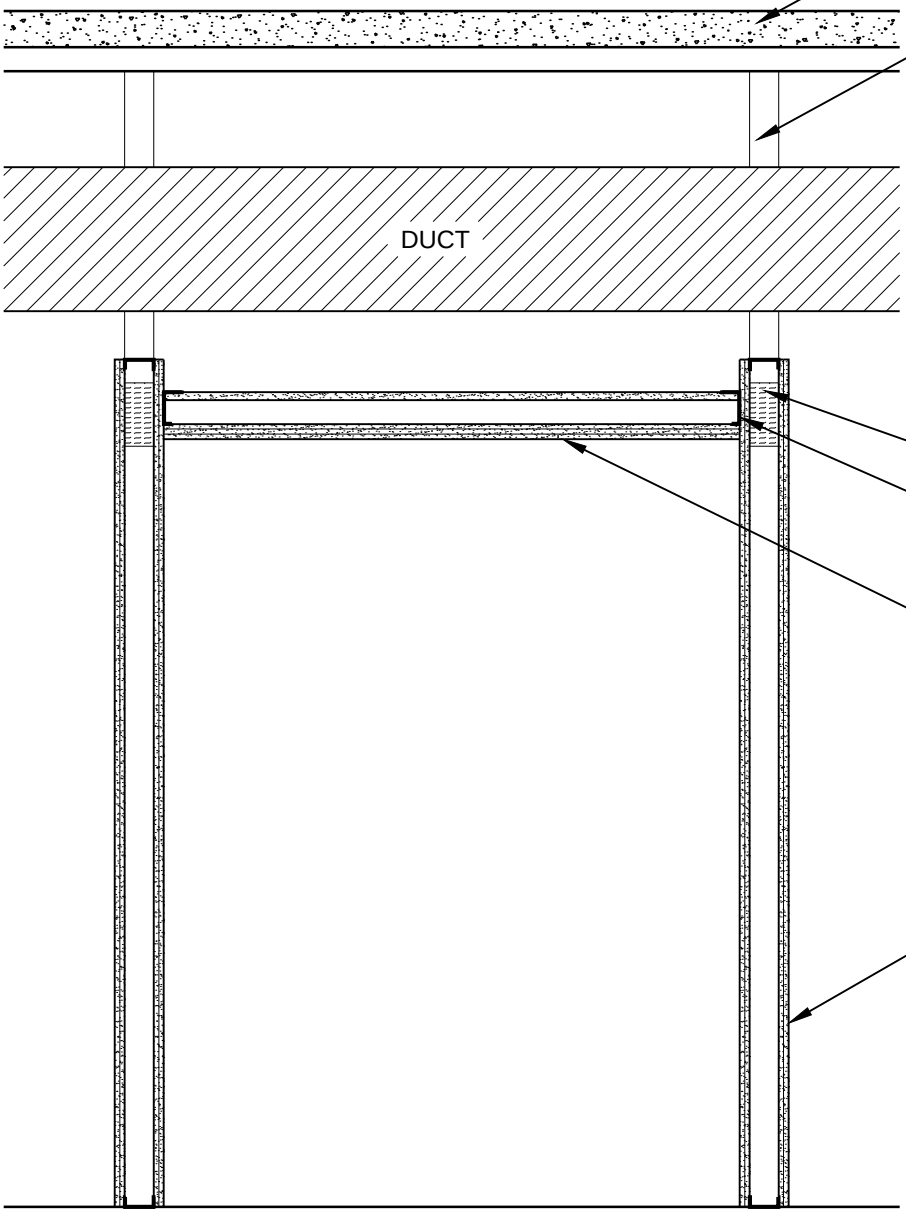

RATED OR NON-RATED
FLOOR-CEILING ASSEMBLY

BRACING AS REQUIRED

MINERAL WOOL INSULATION

STEEL J TRACK - FASTEN
TO STUDS WITH 1 5/8"
TYPE S SCREWS

HORIZONTAL SHAFTWALL
ASSEMBLY - UL DESIGN:
G586

NOTE:
FOR SPANS GREATER THAN
8'-0" REFER TO DETAIL SW 703
FOR INTERMEDIATE SUPPORTS

2 HR RATED PARTITION -
UL DESIGN: U411 OR V438

DATE: 11/05/13	2 HOUR CORRIDOR ASSEMBLY	National Gypsum
SCALE: 1/2"=1'-0"	DETAIL: CR 204	

© National Gypsum Properties, LLC

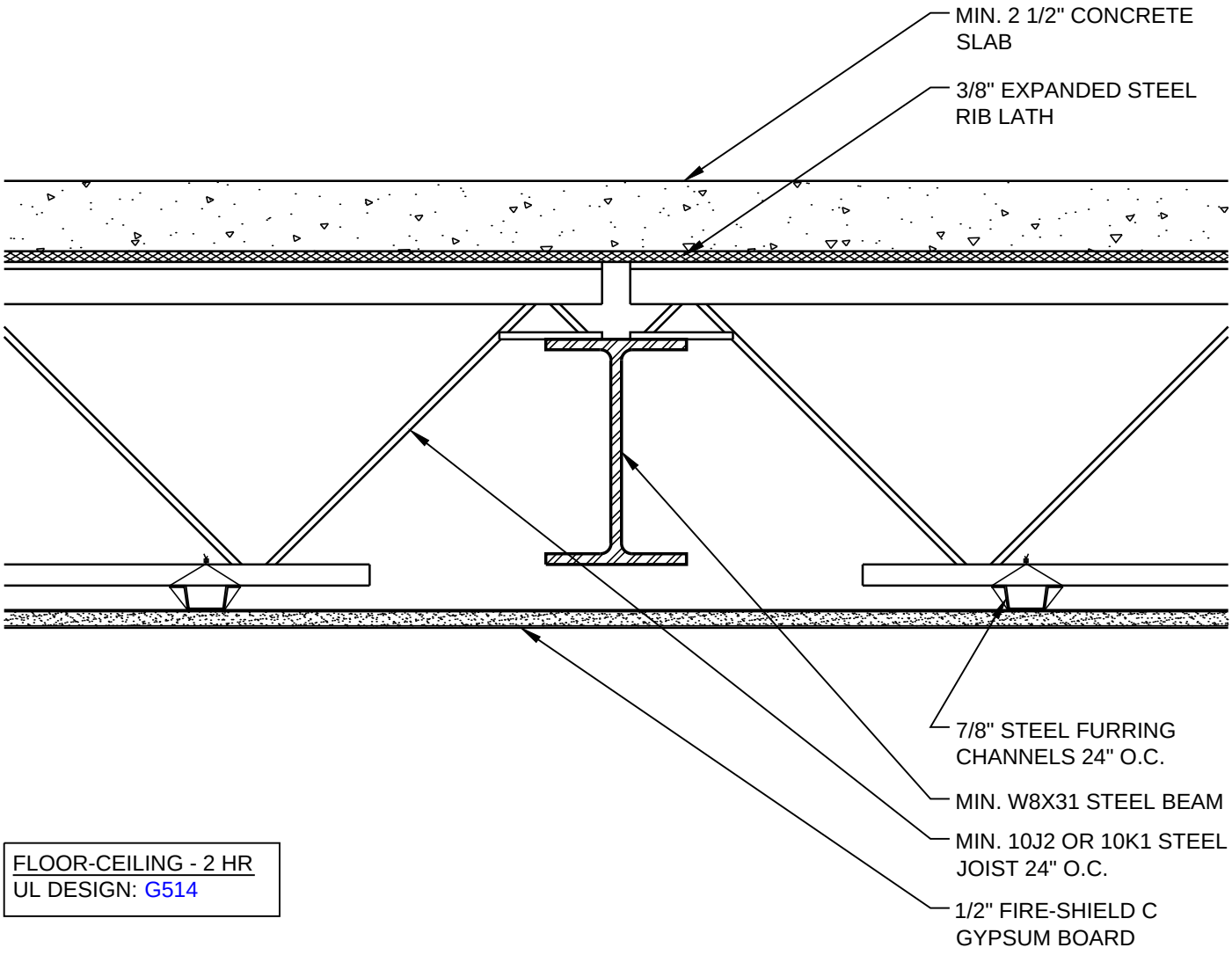

FLOOR-CEILING - 2 HR
UL DESIGN: G514

DATE: 11/05/13	2 HOUR FLOOR-CEILING ASSEMBLY	National Gypsum
SCALE: 2"=1'-0"	DETAIL: FC 202	

© National Gypsum Properties, LLC

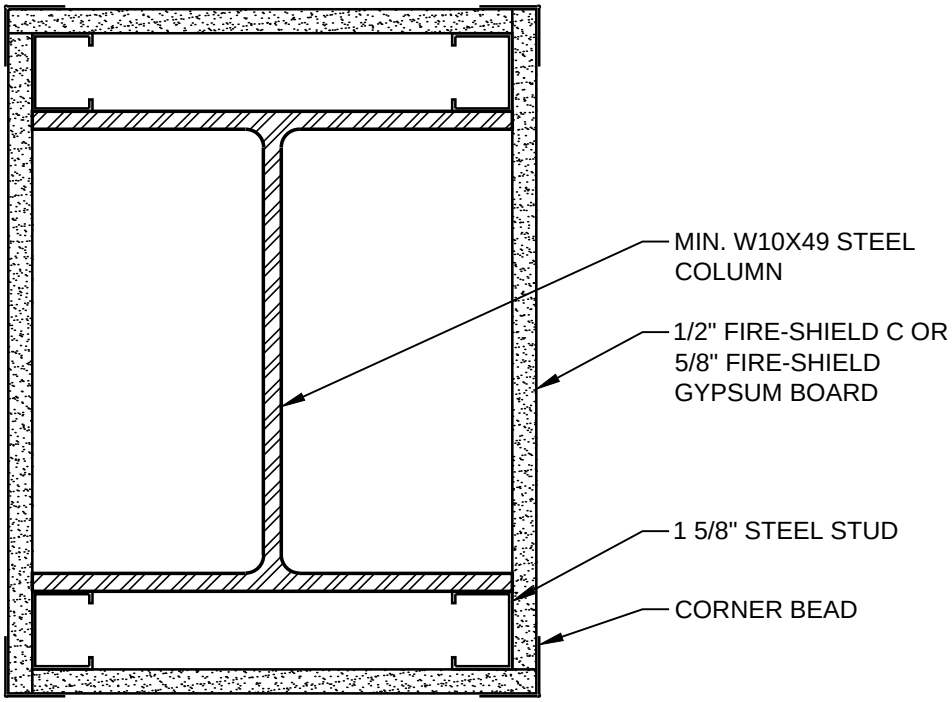

COLUMN - 1 HR
UL DESIGN: X528

DATE: 11/05/13	1 HOUR RATED COLUMN	National Gypsum
SCALE: 3"=1'-0"	DETAIL: CL 101	

© National Gypsum Properties, LLC

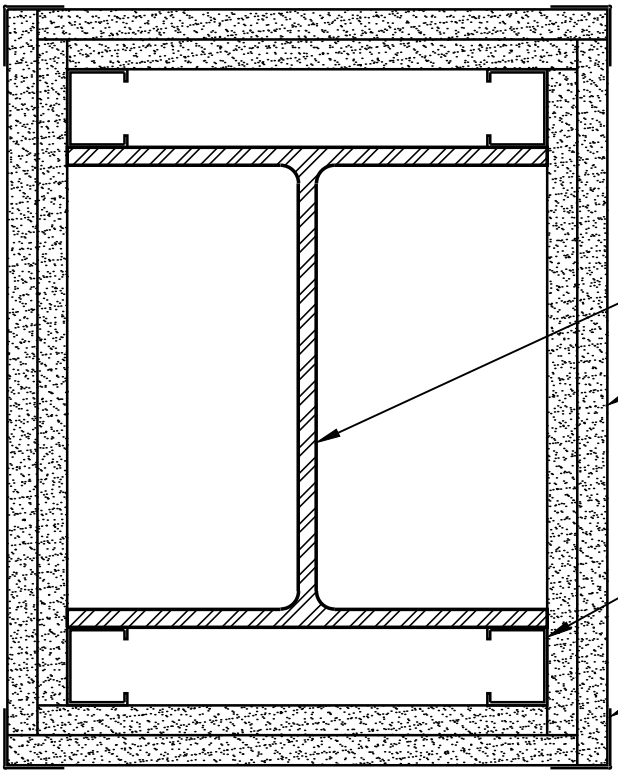

COLUMN - 2 HR
UL DESIGN: X528

DATE: 11/05/13	2 HOUR RATED COLUMN	National Gypsum
SCALE: 3"=1'-0"	DETAIL: CL 201	

© National Gypsum Properties, LLC

COLUMN - 3 HR
UL DESIGN: X510

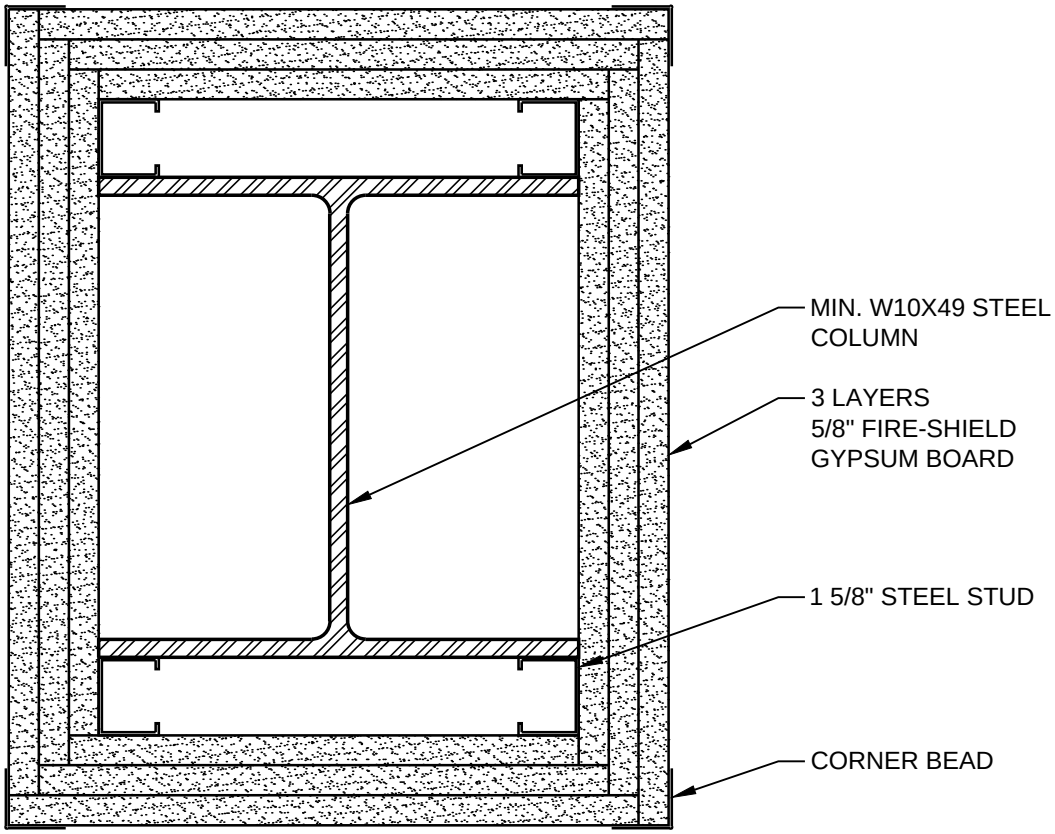

DATE: 11/05/13	3 HOUR RATED COLUMN	National Gypsum
SCALE: 3"=1'-0"	DETAIL: CL 301	

© National Gypsum Properties, LLC

COLUMN - 4 HR
UL DESIGN: X501

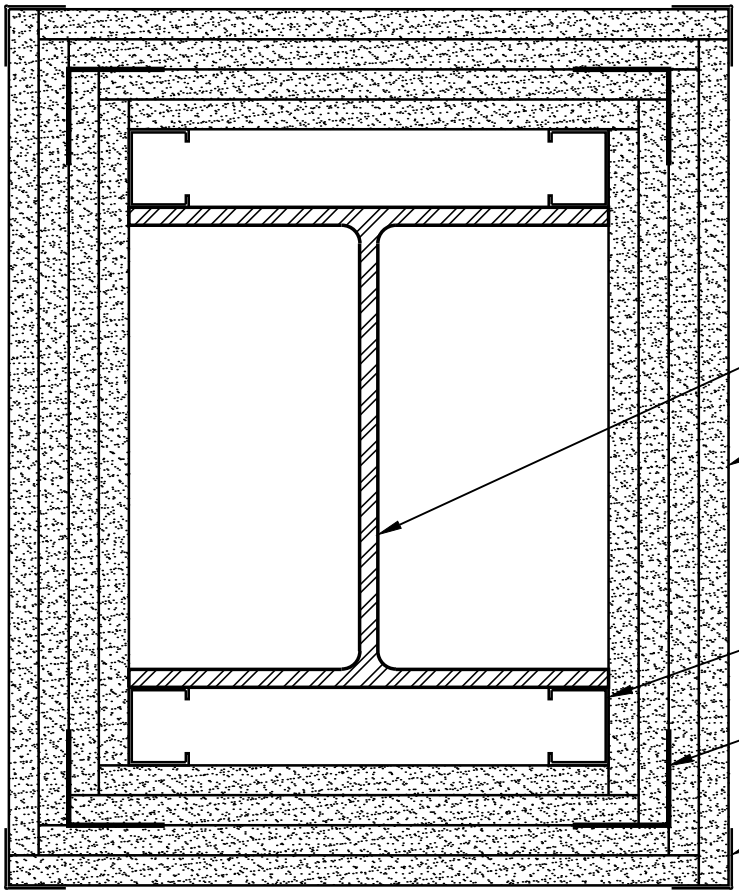

DATE: 11/05/13	4 HOUR RATED COLUMN	National Gypsum
SCALE: 3"=1'-0"	DETAIL: CL 401	

© National Gypsum Properties, LLC

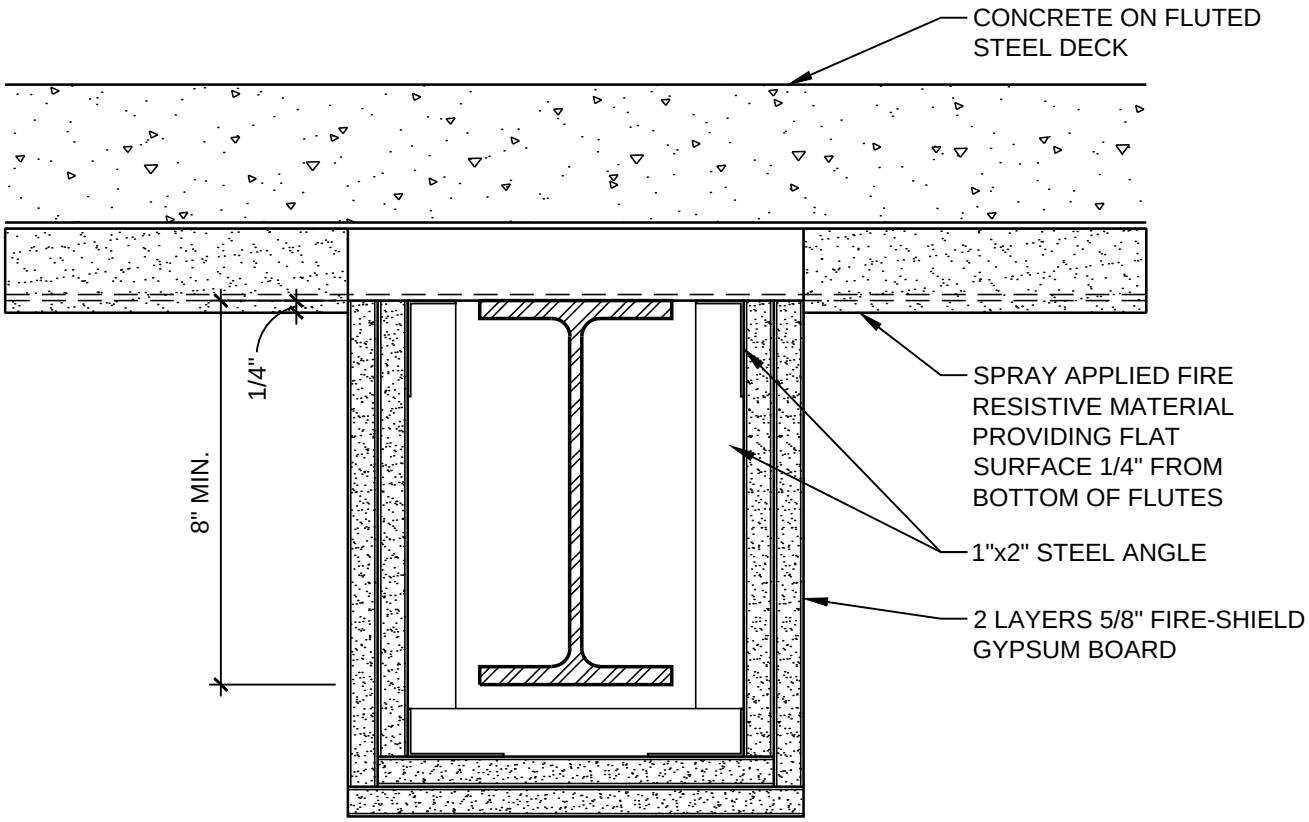

BEAM - 2 HR
UL DESIGN: N501

DATE: 11/05/13	2 HOUR STEEL BEAM	National Gypsum
SCALE: 3"=1'-0"	DETAIL: BM 101	

© National Gypsum Properties, LLC

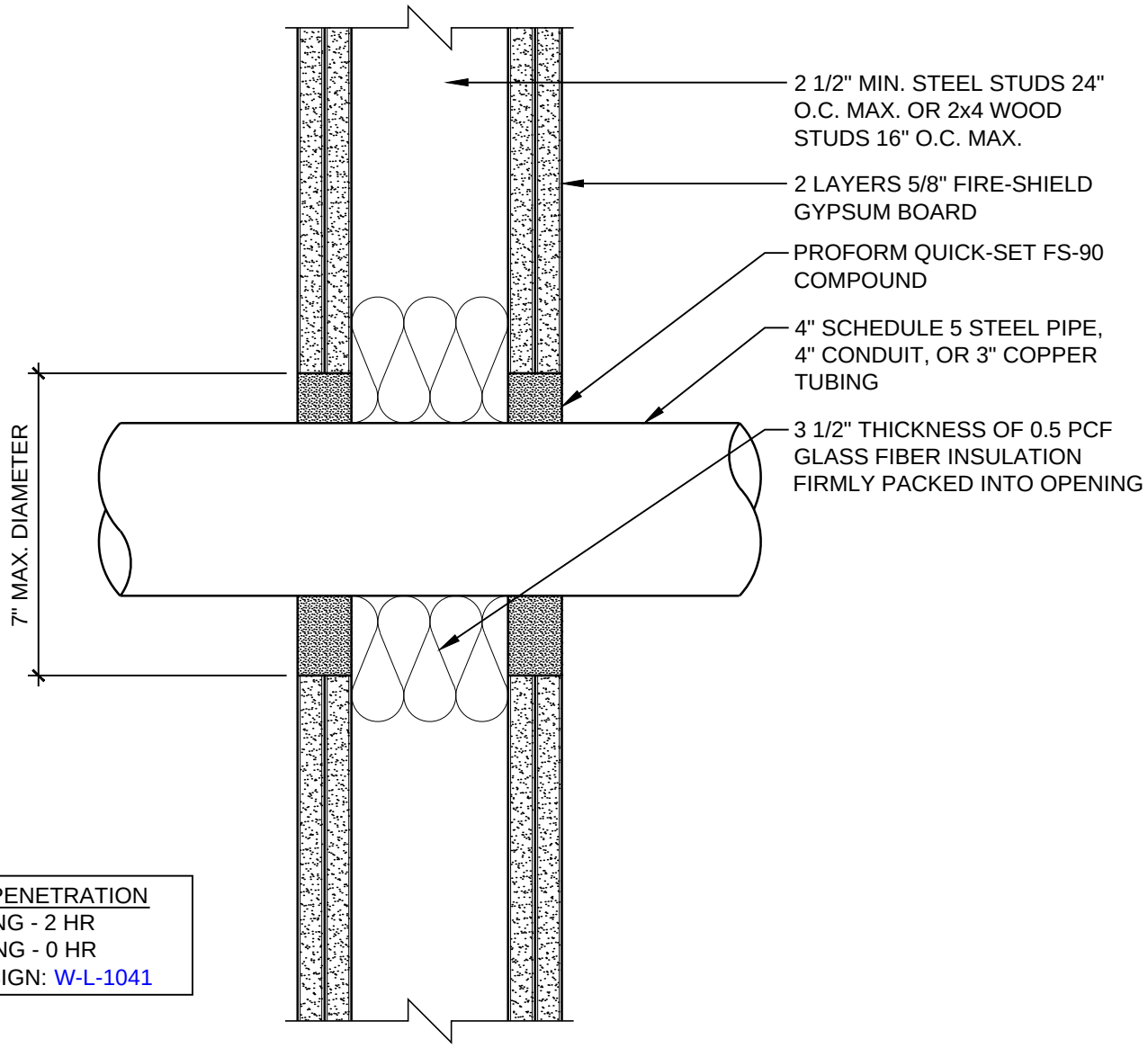

WALL PENETRATION
F RATING - 2 HR
T RATING - 0 HR
UL DESIGN: W-L-1041

DATE: 11/05/13	PIPE PENETRATION THROUGH WALL	National Gypsum
SCALE: 3"=1'-0"	DETAIL: PN 101	

© National Gypsum Properties, LLC

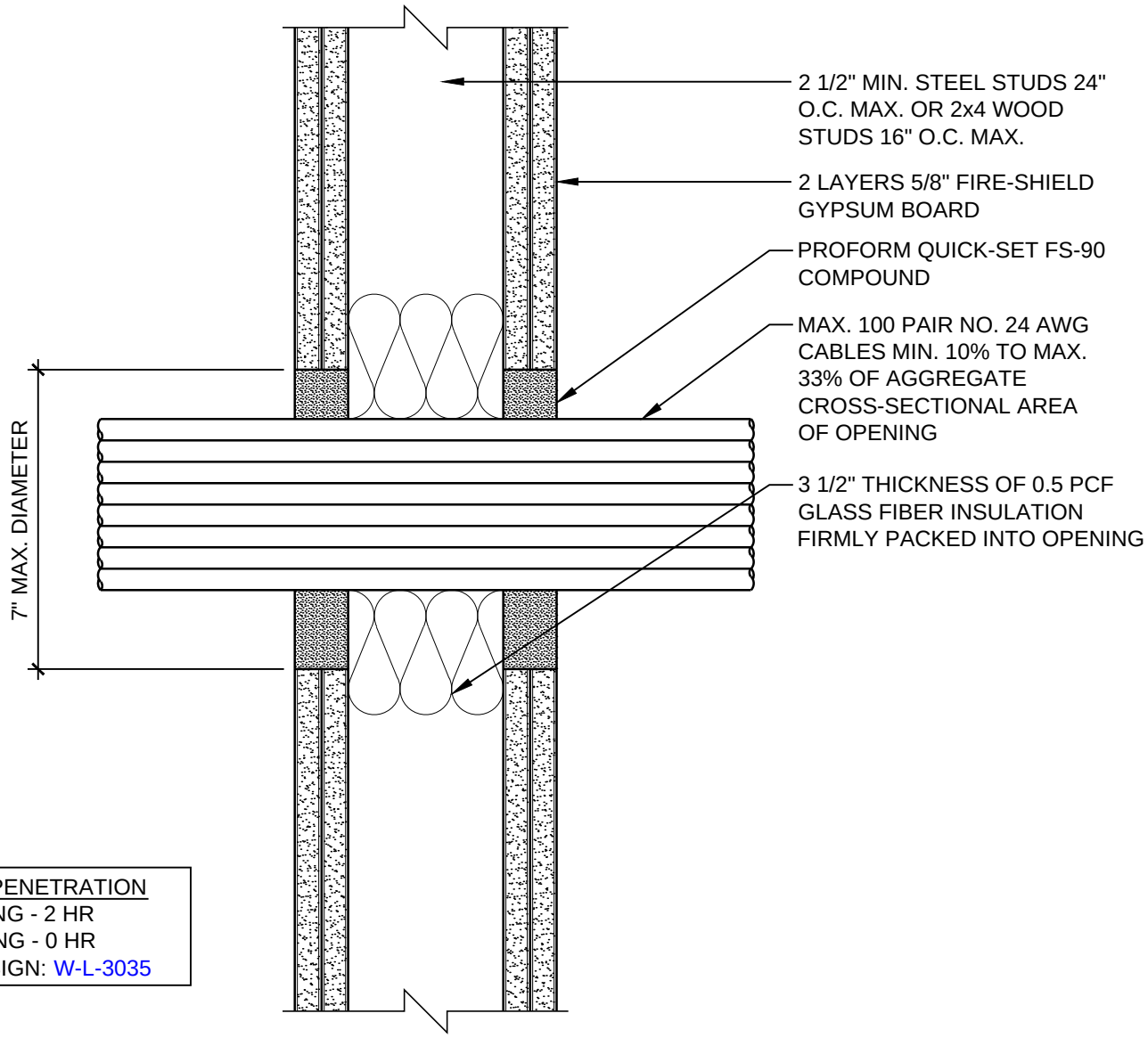

WALL PENETRATION
F RATING - 2 HR
T RATING - 0 HR
UL DESIGN: W-L-3035

DATE: 11/05/13	CABLE PENETRATION THROUGH WALL	National Gypsum
SCALE: 3"=1'-0"	DETAIL: PN 202	

© National Gypsum Properties, LLC

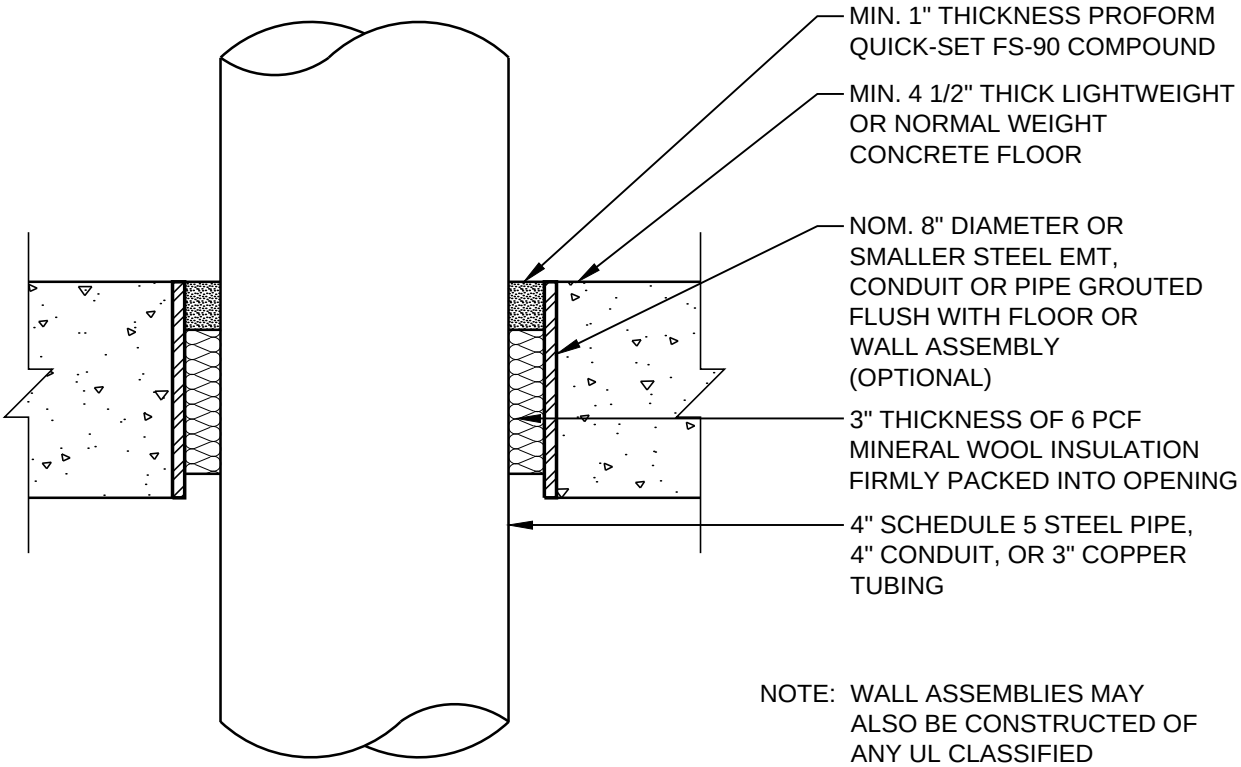

NOTE: WALL ASSEMBLIES MAY ALSO BE CONSTRUCTED OF ANY UL CLASSIFIED CONCRETE BLOCKS

FLOOR PENETRATION
F RATING - 3 HR
T RATING - 0 HR
UL DESIGN: C-AJ-1163

DATE: 11/05/13	PIPE PENETRATION THROUGH FLOOR	National Gypsum
SCALE: 3"=1'-0"	DETAIL: PN 301	

© National Gypsum Properties, LLC

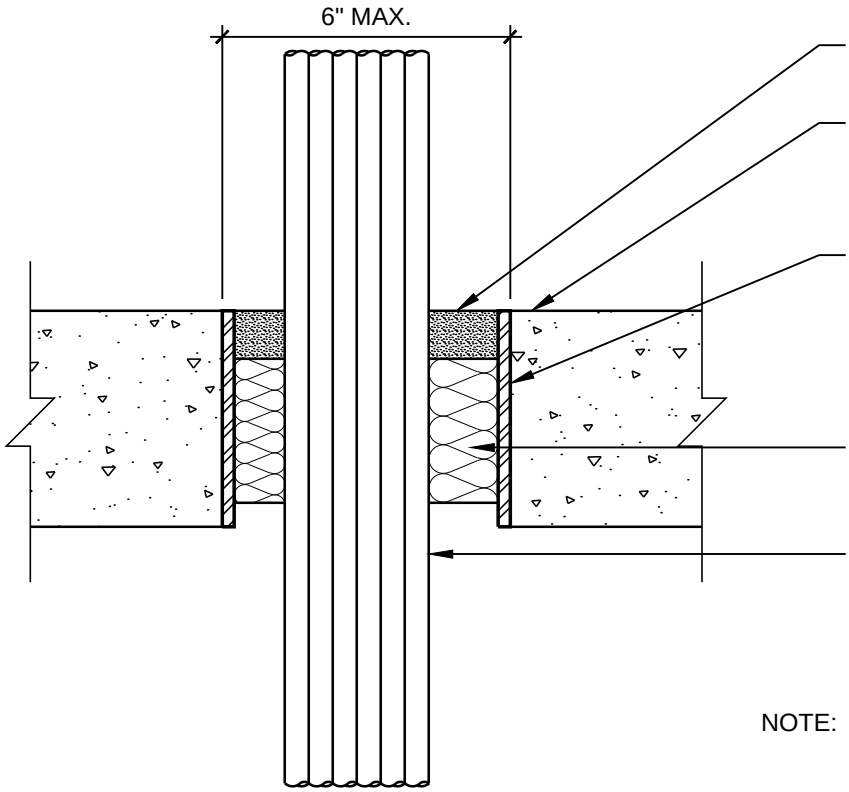

MIN. 1" THICKNESS PROFORM QUICK-SET FS-90 COMPOUND

MIN. 4 1/2" THICK LIGHTWEIGHT OR NORMAL WEIGHT CONCRETE FLOOR OR MIN. 5" THICK CONCRETE WALL

NOM. 6" DIAMETER OR SMALLER SCHEDULE 40 STEEL EMT, CONDUIT OR PIPE GROUTED FLUSH WITH FLOOR OR WALL ASSEMBLY (OPTIONAL)

3" THICKNESS OF GLASS FIBER INSULATION FIRMLY PACKED INTO OPENING

MAX. 100 PAIR NO. 24 AWG CABLES MIN. 10% TO MAX. 40% OF AGGREGATE CROSS-SECTIONAL AREA OF OPENING

NOTE: WALL ASSEMBLIES MAY ALSO BE CONSTRUCTED OF ANY UL CLASSIFIED CONCRETE BLOCKS

FLOOR PENETRATION
F RATING - 3 HR
T RATING - 1/4 HR
UL DESIGN: C-AJ-3073

DATE: 11/05/13	CABLE PENETRATION THROUGH FLOOR	National Gypsum
SCALE: 3"=1'-0"	DETAIL: PN 302	

© National Gypsum Properties, LLC

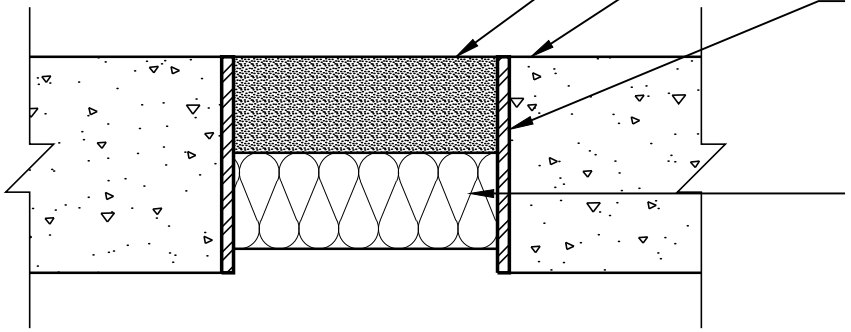

NOTE: WALL ASSEMBLIES MAY ALSO BE CONSTRUCTED OF ANY UL CLASSIFIED CONCRETE BLOCKS

VOID ASSEMBLY
F RATING - 3 HR
T RATING - 1/2 HR
UL DESIGN: C-AJ-0038

DATE: 11/05/13	VOID FILL ASSEMBLY	National Gypsum
SCALE: 3"=1'-0"	DETAIL: PN 303	

© National Gypsum Properties, LLC

UL DESIGN: U465, V438

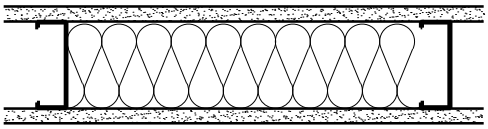

5/8" FIRE-SHIELD GYPSUM BOARD
3 5/8" 25GA. STEEL STUDS **16" O.C.**
3 1/2" GLASS FIBER INSULATION
5/8" FIRE-SHIELD GYPSUM BOARD

STC 43
TEST: NGC 2502

UL DESIGN: U465, V438

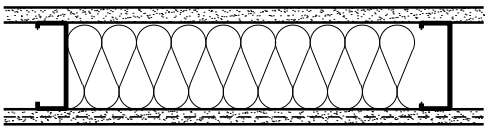

5/8" FIRE-SHIELD GYPSUM BOARD
3 5/8" 25GA. STEEL STUDS **16" O.C.**
3 1/2" GLASS FIBER INSULATION
5/8" SOUNDBREAK XP GYPSUM BOARD

STC 49
TEST: NGC2009058

UL DESIGN: U465, V438

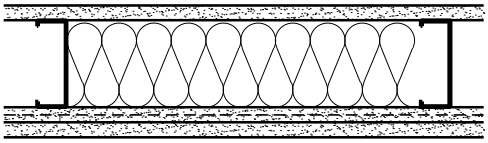

5/8" FIRE-SHIELD GYPSUM BOARD
3 5/8" 25GA. STEEL STUDS **16" O.C.**
3 1/2" GLASS FIBER INSULATION
5/8" SOUNDBREAK XP GYPSUM BOARD
5/8" FIRE-SHIELD GYPSUM BOARD

STC 52
TEST: RAL-TL07-148

UL DESIGN: U465, V438

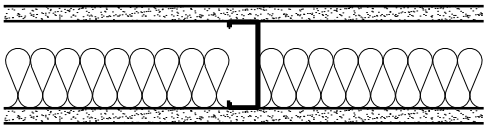

5/8" FIRE-SHIELD GYPSUM BOARD
3 5/8" 25GA. STEEL STUDS **24" O.C.**
2 1/2" GLASS FIBER INSULATION
5/8" FIRE-SHIELD GYPSUM BOARD

STC 47
TEST: NGC 2386

UL DESIGN: U465, V438

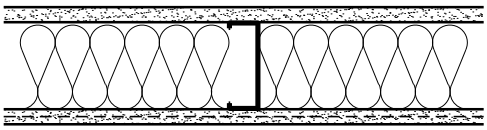

5/8" FIRE-SHIELD GYPSUM BOARD
3 5/8" 25GA. STEEL STUDS **24" O.C.**
3" MINERAL FIBER INSULATION
5/8" SOUNDBREAK XP GYPSUM BOARD

STC 54
TEST: RAL-TL07-389

UL DESIGN: U465, V438

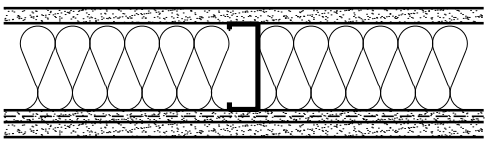

5/8" FIRE-SHIELD GYPSUM BOARD
3 5/8" 25GA. STEEL STUDS **24" O.C.**
3 1/2" GLASS FIBER INSULATION
1/2" SOUNDBREAK XP GYPSUM BOARD
5/8" FIRE-SHIELD GYPSUM BOARD

STC 57
TEST: RAL-TL06-334

DATE: 11/05/13	SOUND RATINGS FOR 1 HOUR PARTITIONS	National Gypsum
SCALE: 1 1/2"=1'-0"	DETAIL: SN 101	

© National Gypsum Properties, LLC

UL DESIGN: U411, V438

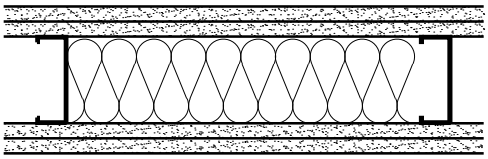

2 LAYERS 5/8" FIRE-SHIELD GYPSUM BOARD
3 5/8" 25GA. STEEL STUDS **16" O.C.**
3 1/2" GLASS FIBER INSULATION
2 LAYERS 5/8" FIRE-SHIELD GYPSUM BOARD

STC 50
TEST: NGC 2500

UL DESIGN: U411, V438

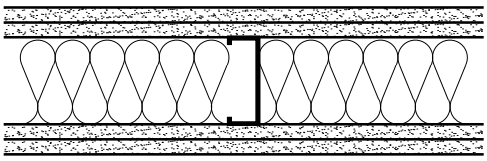

2 LAYERS 5/8" FIRE-SHIELD GYPSUM BOARD
3 5/8" 25GA. STEEL STUDS **24" O.C.**
3 1/2" GLASS FIBER INSULATION
2 LAYERS 5/8" FIRE-SHIELD GYPSUM BOARD

STC 53
TEST: NGC2007002

UL DESIGN: U411, V438

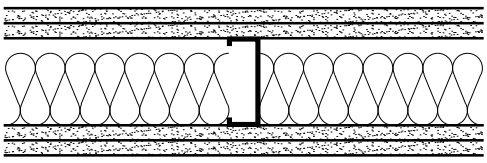

2 LAYERS 5/8" FIRE-SHIELD GYPSUM BOARD
3 5/8" 25GA. STEEL STUDS **24" O.C.**
3" MINERAL FIBER INSULATION
2 LAYERS 5/8" FIRE-SHIELD GYPSUM BOARD

STC 56
TEST: NGC 3022

UL DESIGN: U411, V438

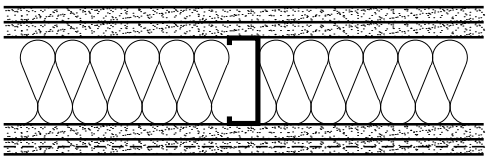

2 LAYERS 5/8" FIRE-SHIELD GYPSUM BOARD
3 5/8" 25GA. STEEL STUDS **24" O.C.**
3 1/2" GLASS FIBER INSULATION
5/8" FIRE-SHIELD GYPSUM BOARD
5/8" SOUNDBREAK XP GYPSUM BOARD

STC 60
TEST: RAL-TL07-168

DATE: 11/05/13	SOUND RATINGS FOR 2 HOUR PARTITIONS	National Gypsum
SCALE: 1 1/2"=1'-0"	DETAIL: SN 102	

© National Gypsum Properties, LLC

UL DESIGN: U499, W419

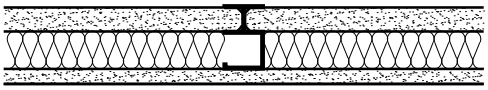

1" FIRE-SHIELD SHAFTLINER
2 1/2" 25GA. CT, CH, OR I STUDS **24" O.C.**
1 1/2" GLASS FIBER INSULATION
5/8" FIRE-SHIELD GYPSUM BOARD

STC 42
TEST: NGC 2542

UL DESIGN: U499, W419

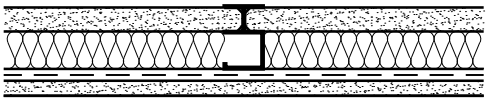

1" FIRE-SHIELD SHAFTLINER
2 1/2" 25GA. CT, CH, OR I STUDS **24" O.C.**
1 1/2" GLASS FIBER INSULATION
1/2" RESILIENT CHANNEL 24" O.C.
5/8" FIRE-SHIELD GYPSUM BOARD

STC 48
TEST: NGC 2541

UL DESIGN: U497, W419

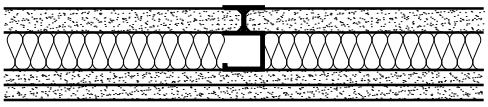

1" FIRE-SHIELD SHAFTLINER
2 1/2" 25GA. CT, CH, OR I STUDS **24" O.C.**
1 1/2" GLASS FIBER INSULATION
2 LAYERS 5/8" FIRE-SHIELD GYPSUM BOARD

STC 48
TEST: NGC 2507

UL DESIGN: U497, W419

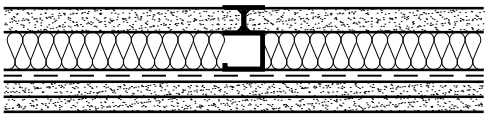

1" FIRE-SHIELD SHAFTLINER
2 1/2" 25GA. CT, CH, OR I STUDS **24" O.C.**
1 1/2" GLASS FIBER INSULATION
1/2" RESILIENT CHANNEL 24" O.C.
2 LAYERS 5/8" FIRE-SHIELD GYPSUM BOARD

STC 51
TEST: NGC 2540

UL DESIGN: U498, W419

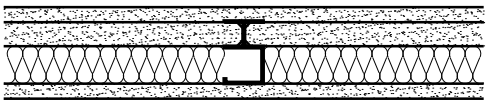

5/8" FIRE-SHIELD GYPSUM BOARD
1" FIRE-SHIELD SHAFTLINER
2 1/2" 25GA. CT, CH, OR I STUDS **24" O.C.**
1 1/2" GLASS FIBER INSULATION
5/8" FIRE-SHIELD GYPSUM BOARD

STC 48
TEST: NGC 2534

UL DESIGN: U498, W419

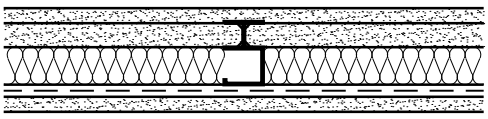

5/8" FIRE-SHIELD GYPSUM BOARD
1" FIRE-SHIELD SHAFTLINER
2 1/2" 25GA. CT, CH, OR I STUDS **24" O.C.**
1 1/2" GLASS FIBER INSULATION
1/2" RESILIENT CHANNEL 24" O.C.
5/8" FIRE-SHIELD GYPSUM BOARD

STC 52
TEST: NGC 2538

DATE: 11/05/13	SOUND RATINGS FOR SHAFTWALL PARTITIONS	National Gypsum
SCALE: 1 1/2"=1'-0"	DETAIL: SN 103	

© National Gypsum Properties, LLC

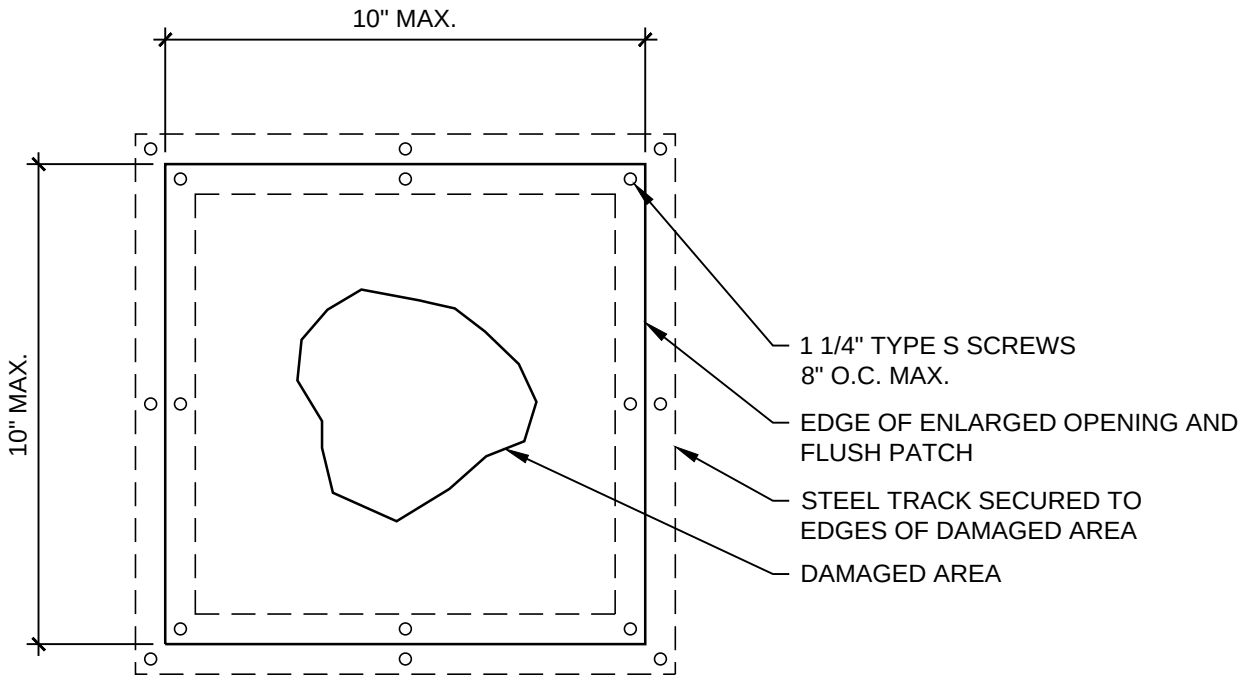

FLUSH PATCH IN RATED PARTITION

FOR MEMBRANE PENETRATIONS LESS THAN 10" IN DIAMETER

NOTES:
FOR MULTIPLE LAYER SYSTEMS STAGGER VERTICAL AND HORIZONTAL PATCH JOINTS 12" MINIMUM AND FASTEN VERTICAL EDGES TO STUD FRAMING

FOR MINOR SURFACE ABRASIONS, PAPER TEARS, OR SMALL DENTS, REMOVE ALL LOOSE PAPER AND APPLY SETTING COMPOUND OVER THE DAMAGED AREA.

DATE: 11/05/13	REPAIR OF FIRE-RATED GYPSUM BOARD PARTITIONS	National Gypsum
SCALE: 3"=1'-0"	DETAIL: RE 101	

© National Gypsum Properties, LLC

1-800-NATIONAL®
Construction Services

A Valuable Resource.

With over 70 years of accumulated research, on-the-job experience and knowledge of building products and their application, National Gypsum is your resource for technical information. Beyond simply manufacturing and providing quality building products, National Gypsum has made a total commitment to technical assistance for our customers all along the line at every stage of a project's development.

You've got the questions ... we've got the answers.
From left, the technical service team: Mark Chapman, Sam Halverson and Jim Farrell.

Corporate Headquarters

National Gypsum Company
2001 Rexford Road
Charlotte, NC 28211

Phone: (704) 365-7300
Web: nationalgypsum.com

Technical Information

Phone: (800) NATIONAL
(800) 628-4662
Fax: (800) FA X-NGC1
(800) 329-6421

The Color PURPLE is a registered trademark of National Gypsum Properties, LLC

The Purple Book

National Gypsum®

111226 Rev. 2/14