BOARD OF
BUILDING AND SAFETY
COMMISSIONERS

MARSHA L. BROWN
PRESIDENT

PEDRO BIRBA
VICE-PRESIDENT

VAN AMBATIELOS
HELENA JUBANY
ELENORE A. WILLIAMS

CITY OF LOS ANGELES

CALIFORNIA

ANTONIO R. VILLARAIGOSA
MAYOR

DEPARTMENT OF
BUILDING AND SAFETY
201 NORTH FIGUEROA STREET
LOS ANGELES, CA 90012

ANDREW A. ADELMAN, P.E.
GENERAL MANAGER

RAYMOND CHAN
EXECUTIVE OFFICER

Simpson Strong-Tie
260 N. Palm Street
Brea, CA 92821

Attn: Annie Tran, P.E.
(714) 738-2108

RESEARCH REPORT: RR 25552
(CSI # 06090)

BASED UPON ICC EVALUATION SERVICE
LEGACY REPORT NO. ER-5952

REEVALUATION DUE DATE:
June 1, 2009

GENERAL APPROVAL - Reevaluation/Clerical Modification - Simpson Strong-Tie, Quick Drive CBSQ-SDS2 and CBQ-SDS2 Column Base Connectors and ECCQ/CCQ-SDS2 Column Cap Connectors.

DETAILS

The above products are approved when in compliance with the description, use, identification, and findings of Legacy Report No. ER-5952, dated March 1, 2007, of the ICC Evaluation Service Incorporated. The report, in its entirely, is attached and made a part of this general approval.

The parts of Legacy Report No. ER-5952 marked by the asterisks are modified by the Los Angeles Building Department from this approval.

The approval is subject to the following conditions:

1. Allowable loads are based on a factor of safety of 3.

2. Allowable loads shall not be increased for duration of loading.

3. The allowable loads specified in this approval are for the wood fastening devices and its fasteners and does not include supporting members.

LADBS G-5 (Rev. 7/05)

AN EQUAL EMPLOYMENT OPPORTUNITY - AFFIRMATIVE ACTION EMPLOYER

4. Test data verifying the properties of the steel, by the mill or by an approved testing agency, shall be obtained for each shipment. The data shall be kept on file and submitted to the Department upon request.

DISCUSSION

The clerical modification is to change the contact person, the phone number and the address.

The approval is based on tests and analyses.

This general approval of an equivalent alternate to the Code is only valid where an engineer and/or
inspector of this Department has determined that all conditions of this Approval have been met in the project in which it is to be used.

Addressee to whom this Research Report is issued is responsible for providing copies of it, complete with any attachments indicated, to architects, engineers and builders using items approved herein in design or construction which must be approved Department of Building and Safety Engineers and Inspectors.

YEUAN CHOU, Chief
Engineering Research Section
2319 Dorris Place
Los Angeles, CA 90031
Phone (213) 485-2376
Fax (213) 847-0597

RB:elcm
RR25552/wp8
P05/23/07
5D2/2318

Attachments: ICC ES Legacy Report No. ER-5952 (5 pages)

ICC Evaluation Service, Inc.
www.icc-es.org

Business/Regional Office ■ 5360 Workman Mill Road, Whittier, California 90601 ■ (562) 699-0543
Regional Office ■ 900 Montclair Road, Suite A, Birmingham, Alabama 35213 ■ (205) 599-9800
Regional Office ■ 4051 West Flossmoor Road, Country Club Hills, Illinois 60478 ■ (708) 799-2305

* **Legacy report on the 1997 *Uniform Building Code*™~~, the 2000 *International Building Code*®, and the 2000 *International Residential Code*®~~**

DIVISION: 06—WOOD AND PLASTICS
Section: 06090—Wood and Plastic Fastenings

SIMPSON STRONG-TIE® QUICK DRIVE CBSQ-SDS2 AND CBQ-SDS2 COLUMN BASE CONNECTORS AND ECCQ/CCQ-SDS2 COLUMN CAP CONNECTORS

SIMPSON STRONG-TIE COMPANY, INC.
5956 WEST LAS POSITAS BOULEVARD
PLEASANTON, CALIFORNIA 94588

1.0 SUBJECT

Simpson Strong-Tie® Quick Drive CBSQ-SDS2 and CBA-SDS2 Column Base Connectors and ECCQ/CCQ-SDS2 Column Cap Connectors.

2.0 DESCRIPTION

2.1 CBSQ-SDS2 Quick Drive Standoff Column Base:

The CBSQ-SDS2 column base is used to anchor wood posts to concrete footings, and provides a 1-inch (25.4 mm) clearance from the concrete surface for the wood post. The column base plate connector consists of a U-shaped strap with a 1-inch (25.4 mm) standoff base located approximately halfway up the U-shaped strap. The strap is die-formed from No. 10 gage [0.1342 inch (3.4 mm) uncoated base-metal thickness], G60, galvanized steel, complying with ASTM A 653, SS, Grade 33, with a minimum yield strength of 33 ksi (227.6 MPa) and a minimum tensile strength of 45 ksi (310.3 MPa). The base plates are formed from No. 12 gage [0.1026 inch (2.6 mm)], G60, galvanized steel, of the same grade as the steel used for the strap. The portion of the strap above the base plate is prepunched with a total of fourteen $^{17}/_{64}$-inch-diameter (6.7 mm) holes to receive SDS $^{1}/_{4}$ inch × 2 inch (6.4 mm × 50.8 mm) wood screws. Table 1 lists CBSQ-SDS2 models, nominal sizes of attached wood posts, connector dimensions, numbers of screws and allowable loads.

2.2 CBQ-SDS2 Quick Drive Standoff Column Base:

The CBQ-SBS2 column bases are for anchoring wood posts to concrete footings. The CBQ-SDS2 column base connector is composed of a U-shaped strap with a flat steel base plate located approximately halfway up the U-shaped strap. The strap and base plate are formed from No. 7 gage [0.1805 inch (4.6 mm) base-metal thickness], G60, galvanized steel, complying with ASTM A 653, SS Grade 33, with a minimum yield strength of 33 ksi (227.6 MPa) and an ultimate strength of 45 ksi (310.3 MPa). The upper portion of the strap is prepunched with a total of twelve $^{17}/_{64}$-inch-diameter (6.7 mm) holes to receive SDS $^{1}/_{4}$ inch × 2 inch (6.4 mm × 50.8 mm) wood screws. The wood post is permitted to be nontreated wood, since the CBQ connector is recognized only for locations not exposed to the weather or to water splash. The CBQ connector is not recognized for use in basements where it supports the permanent structure unless the wood post is naturally durable or preservative-treated wood in accordance with Section 2306.5 of the 1997 *Uniform Building Code*™ (UBC) ~~and Section 2304.11.2.6 of the 2000 *International Building Code*® (IBC).~~ * Table 2 lists CBQ-SDS2 models, nominal sizes of attached wood posts, connector dimensions, numbers of screws and allowable loads.

2.3 ECCQ/CCQ Quick Drive Column Caps:

The ECCQ/CCQ column caps are used to connect wood beams to wood columns. The column caps are formed from either No. 7 gage [0.1795 inch (4.5 mm) base-metal thickness] or No. 3 gage [0.2405 inch (6.1 mm)] hot-rolled steel as shown in Table 3. Both gages of steel comply with ASTM A 1011, Grade 33, with a minimum yield strength of 33 ksi (227.6 MPa) and an ultimate tensile strength of 52 ksi (358.6 MPa). The column cap consists of a U-channel with two straps of steel welded to the bottom of the U-channel. The column caps are prepunched with $^{17}/_{64}$-inch-diameter (6.7 mm) holes to receive SDS $^{1}/_{4}$ inch × 2 inch (6.4 mm × 50.8 mm) wood screws. Table 3 lists ECCQ/CCQ models, nominal sizes of attached wood posts, connector dimensions, numbers of screws and allowable loads.

2.4 Design Criteria:

The allowable loads for the Simpson Strong-Tie connectors recognized in this evaluation report are based on the lowest load obtained from comparing the following:

- The test load under which $^{1}/_{8}$-inch (3.2 mm) deflection occurs.
- The lowest ultimate test load, divided by a factor of safety of 3.
- Allowable loads based on calculations using allowable capacities of steel, fasteners and wood.

Allowable loads for the connectors are based on lumber members having a minimum specific gravity of 0.50; and a minimum allowable bearing design, F_g, value and a minimum allowable compression perpendicular-to-grain, $F_{c\perp}$, value as noted in Tables 1, 2, and 3. Adjustments of allowable loads

ICC-ES legacy reports are not to be construed as representing aesthetics or any other attributes not specifically addressed, nor are they to be construed as an endorsement of the subject of the report or a recommendation for its use. There is no warranty by ICC Evaluation Service, Inc., express or implied, as to any finding or other matter in this report, or as to any product covered by the report.

* DELETED BY CITY OF LOS ANGELES

Copyright © 2007

for duration of load are shown in each table in this report. No further load duration adjustments are permitted. For connections in wood that is unseasoned or partially seasoned, or when connections are exposed to wet service conditions in use, the allowable loads in this evaluation report must be multiplied by the wet service factor, C_m, specified in Section 7.3.3 of the NDS.

2.5 Materials:

2.5.1 Concrete: Allowable uplift loads for the CBSQ-SDS2 Standoff Column Base connector are based on the concrete's being normal-weight concrete having a minimum compressive strength, f'_c, of 2,300 psi (15 847 kPa). For the CBQ-SDS2 Column Base connector, concrete must be normal-weight concrete having a minimum compressive strength, f'_c, of 2,500 psi (17 225 kPa).

2.5.2 Steel: The specifications and uncoated base-metal steel thicknesses of steel connectors are described in Sections 2.1, 2.2, and 2.3.

2.5.3 Wood: The wood posts must be nominal-dimensioned solid-sawn lumber, and wood beams must be nominal-dimensioned lumber or engineered lumber having dimensions consistent with the connector dimensions in Tables 1, 2, and 3. The lumber must have a minimum specific gravity of 0.50. Use of connectors is limited to lumber that has not been treated with fire-retardant chemicals.

2.5.4 Simpson SDS-Series Wood Screws: Simpson SDS-Series Wood Screws are recognized in ~~ICBO ES evaluation report ER-5268.~~ ** LARR 25281

2.5.5 Welds: The ECCQ/CCQ Column Cap connectors have structural welding and are manufactured under an independent quality control program with inspections by Professional Service Industries, Inc. (AA-660).

2.6 Installation:

Connectors must be installed in accordance with this report.

2.7 Identification:

For field identification, each of the connectors described in this report must be stamped with the words "Simpson Strong-Tie," the model number of the connector, and the evaluation report number (ER-5952). Additionally, ECCQ/CCQ Column Cap connectors are labeled with the name of the inspection agency (Professional Service Industries, Inc.).

3.0 EVIDENCE SUBMITTED

Calculations, material specifications, and reports of load tests in accordance with the Acceptance Criteria for Joist Hangers and Similar Devices (AC13), dated January 2002; and a quality control manual.

4.0 FINDINGS

That the Simpson Strong-Tie Quick Drive CBSQ-SDS2 and CBQ-SDS2 Column Connectors and ECCQ/CCQ Column Cap Connectors described in this report comply with the 1997 *Uniform Building Code*™ (UBC), ~~the 2000 *International Building Code*® (IBC), and the 2000 *International Residential Code*® (IRC),~~ subject to the following conditions: *

4.1 The connectors are manufactured, identified and installed in accordance with this report and the manufacturer's installation procedures.

4.2 Allowable loads noted in the tables are based on wood species having a specific gravity of 0.50, and a moisture content not exceeding 19 percent.

4.3 Loads designated as allowable uplift loads have been increased by 33 percent (UBC) ~~or 60 percent (IBC and IRC~~) for short-duration loads. No further increases are permitted. *

4.4 Engineering calculations, demonstrating that the allowable loads shown in this report for the connectors are not exceeded, are submitted to the building official.

4.5 Fasteners for pressure-preservative-treated wood are of hot-dipped zinc-coated galvanized steel, except, when approved, fasteners used in contact with preservative-treated wood products when not below grade or exposed to weather.

This report is subject to re-examination in two years.

* DELETED BY CITY OF LOS ANGELES

** REVISED BY CITY OF LOS ANGELES

TABLE 1—CBSQ-SDS2 QUICK DRIVE STANDOFF POST BASE CONNECTORS[1,2]

MODEL NO.	NOMINAL POST SIZE	MATERIAL[3]		DIMENSIONS (inches)			NO. OF SIMPSON SDS $^1/_4$ × 2" WOOD SCREWS	ALLOWABLE LOADS (lbs.)		
		Base (Ga)	Strap (Ga × Width)	W_1	W_2	D		Uplift[4] *		Gravity[5] (100%)
								133%	~~160%~~	
CBSQ44-SDS2	4 × 4	12	10 ga × $2^1/_4$"	$3^9/_{16}$	$3^1/_2$	$7^1/_8$	14	5335	~~5335~~	10,975
CBSQ46-SDS2	4 × 6	12	10 ga × 3"	$3^9/_{16}$	$5^5/_{16}$	$7^3/_4$	14	5335	~~5335~~	14,420
CBSQ66-SDS2	6 × 6	12	10 ga × 3"	$5^1/_2$	$5^3/_8$	$6^7/_8$	14	5710	~~6855~~	14,420

For **SI:** 1 inch = 25.4 mm, 1 lbf = 4.45 N, 1 psi = 6.89 kPa.

1. Concrete must be normal-weight concrete having a minimum compressive strength, f'_c, of 2,300 psi.
2. Allowable loads are based on lumber having a minimum specific gravity of 0.50. Gravity loads are based on lumber having a minimum allowable bearing design value, F_g, = 2020 psi (for 4x DFL posts) and F_g = 1480 psi (for 6x DFL posts).
3. Steel noted with a gage thickness has the following minimum base-metal thicknesses: 10 gage = 0.1342 inch, and 12 gage = 0.1026 inch.
4. * Uplift loads include a 33% (UBC) ~~or 60% (IBC and IRC)~~ increase for earthquake or wind loading, with no further increase allowed.
5. Gravity loads are not permitted to be increased for duration of load.

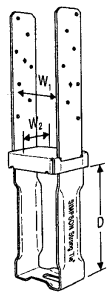

CBSQ

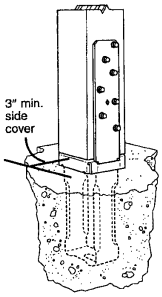

Typical CBSQ Installation

TABLE 2—CBQ-SDS2 QUICK DRIVE COLUMN BASE CONNECTOR[1,2,3,4]

MODEL NO.	NOMINAL POST SIZE[3]	MATERIAL[5]		DIMENSIONS (inches)			NO. OF SIMPSON SDS $^1/_4$ × 2" WOOD SCREWS	ALLOWABLE UPLIFT LOADS[6] (lbs.) *	
		Base (Ga)	Strap (Ga × Width)	W_1	W_2	D		133%	~~160%~~
CBQ44-SDS2	4 × 4	7	7 ga × 2"	$3^9/_{16}$	$3^9/_{16}$	8	12	4200	~~4200~~
CBQ46-SDS2	4 × 6	7	7 ga × 2"	$3^9/_{16}$	$5^1/_2$	8	12	4200	~~4200~~
CBQ66-SDS2	6 × 6	7	7 ga ×2"	$5^1/_2$	$5^1/_2$	8	12	4200	~~4200~~

For **SI:** 1 inch = 25.4 mm, 1 lbf = 4.45 N, 1 psi = 6.89 kPa.

1. Minimum concrete side cover is 3 inches.
2. Concrete must be normal-weight concrete having a minimum compressive strength, f'_c, of 2,500 psi.
3. Allowable loads are based on lumber having a minimum specific gravity of 0.50.
4. The download (gravity) capacity is not shown in the table. The download capacity must be calculated by using the area of the post bearing on the base plate times the wood bearing capacity (compression parallel to grain).
5. Steel noted with a gage thickness has the following minimum base-metal thickness: 7 gage = 0.1805 inch.
6. * Uplift loads include a 33% (UBC) ~~or 60% (IBC and IRC)~~ increase for earthquake or wind loading, with no further increase allowed.

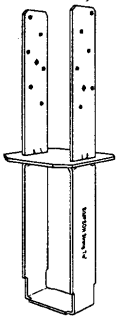

CBQ

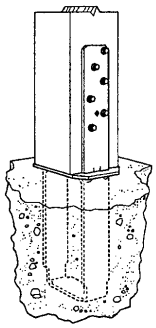

Typical CBQ Installation

* DELETED BY CITY OF LOS ANGELES

TABLE 3—ECCQ/CCQ-SDS2 COLUMN CAPS[1]

MODEL NO.	DIMENSIONS[2] (inches)						NO. OF SDS $^1/_4$ × 2.5 SCREWS		ALLOWABLE LOADS (lbs.)				
	Gage	W_1	W_2	L		H	Beam	Post	Uplift[3,4]			Download[5,6]	
				CCQ	ECCQ				CCQ		ECCQ	CCQ	ECCQ
									133%	160%	133% ~~or 160%~~	100%	100%
CCQ3-4-SDS2.5	7	$3^1/_4$	$3^5/_8$	11	$8^1/_2$	7	16	14	5680	5680	3695	19,250	6125
CCQ3-6-SDS2.5	7	$3^1/_4$	$5^1/_2$	11	$8^1/_2$	7	16	14	5680	5680	3695	19,250	9625
CCQ44-SDS2.5	7	$3^5/_8$	$3^5/_8$	11	$8^1/_2$	7	16	14	5680	5680	4040	24,065	7655
CCQ46-SDS2.5	7	$3^5/_8$	$5^1/_2$	11	$8^1/_2$	7	16	14	5955	7145	4040	24,065	12,030
CCQ48-SDS2.5	7	$3^5/_8$	$7^1/_2$	11	$8^1/_2$	7	16	14	5955	7145	4040	24,065	16,405
CCQ5-4-SDS2.5	3	$5^1/_4$	$3^5/_8$	11	$8^1/_2$	7	16	14	5680	5680	4040	31,570	10,045
CCQ5-6-SDS2.5	3	$5^1/_4$	$5^1/_2$	11	$8^1/_2$	7	16	14	6270	7245	5535	31,570	15,785
CCQ5-8-SDS2.5	3	$5^1/_4$	$7^1/_2$	11	$8^1/_2$	7	16	14	6270	7245	5535	31,570	21,525
CCQ64-SDS2.5	7	$5^1/_2$	$3^5/_8$	11	$8^1/_2$	7	16	14	5680	5680	4040	37,810	12,030
CCQ66-SDS2.5	7	$5^1/_2$	$5^1/_2$	11	$8^1/_2$	7	16	14	5955	7145	4040	37,815	18,905
CCQ68-SDS2.5	7	$5^1/_2$	$7^1/_2$	11	$8^1/_2$	7	16	14	5955	7145	4040	37,815	25,780
CCQ74-SDS2.5	3	$6^7/_8$	$3^5/_8$	11	$8^1/_2$	7	16	14	5680	5680	4040	41,580	13,230
CCQ76-SDS2.5	3	$6^7/_8$	$5^1/_2$	11	$8^1/_2$	7	16	14	6270	7245	5535	41,580	20,790
CCQ77-SDS2.5	3	$6^7/_8$	$6^7/_8$	11	$8^1/_2$	7	16	14	6270	7245	5535	41,580	25,515
CCQ78-SDS2.5	3	$6^7/_8$	$7^1/_2$	11	$8^1/_2$	7	16	14	6270	7245	5535	41,580	28,350

For **SI:** 1 inch = 25.4 mm, 1 lbf = 4.45 N, 1 psi = 6.89 kPa.

1. Spliced conditions must be detailed by the designer to transfer tension loads between spliced members by means other than the column cap.
2. Steel noted with a gage thickness has the following base-metal thicknesses: 3 gage = 0.2405 inch, and 7 gage = 0.1805 inch.
3. Uplift loads have been increased by 33% (UBC) ~~or 60% (IBC and IRC)~~ for earthquake or wind loading.
4. Uplift loads do not apply to splice conditions, where the beam is not continuous over the connector.
5. Tabulated downloads are based on the supported beam having an allowable compression perpendicular-to-grain ($F_{c\perp}$) stress value equal to 560 psi for glulam sizes, and 625 psi for Douglas fir.
6. Downloads are based on the assumption that post sides lie in the same vertical plane as beam sides (post size is minimum $W_1 \times W_2$.).

* DELETED BY CITY OF LOS ANGELES

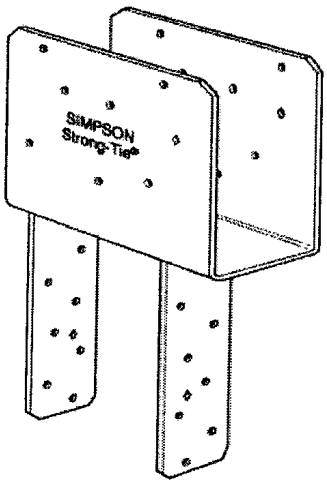

ECCQ46SDS2.5

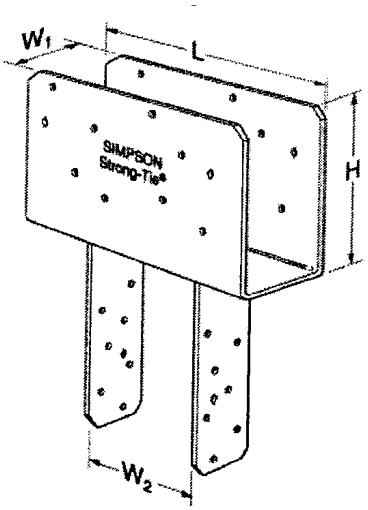

CCQ46SDS2.5

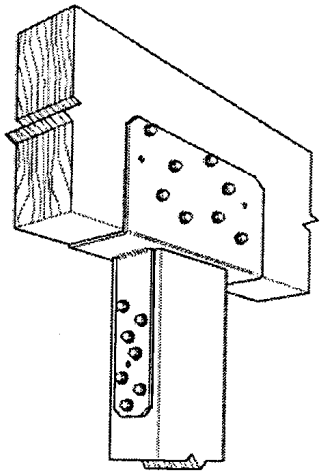

CCQ46SDS2.5
Typical Installation