RADIUS

REPLACEABLE CAST IN PLACE

2.35" DOME SPACING

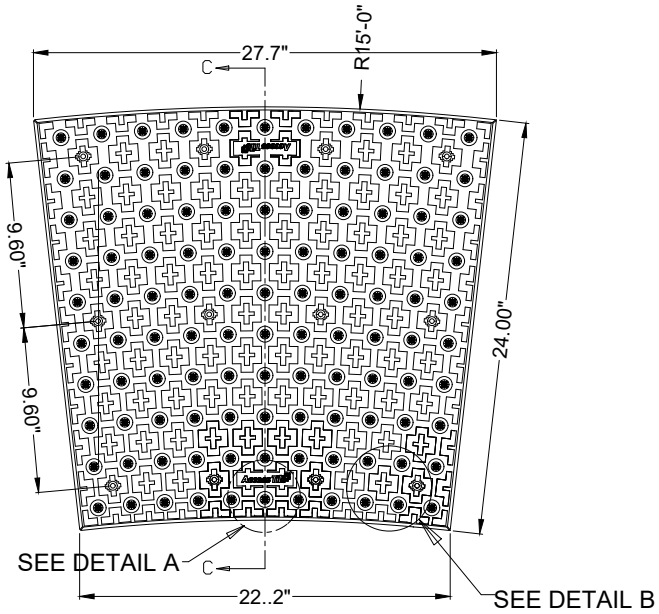

PLAN

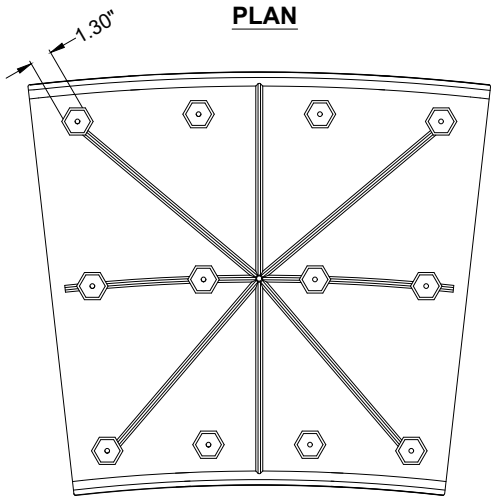

UNDERSIDE VIEW

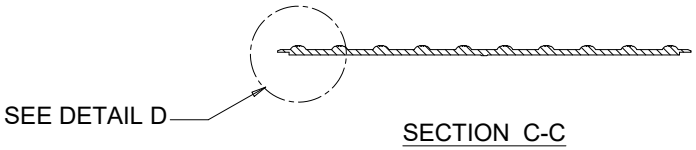

SECTION C-C

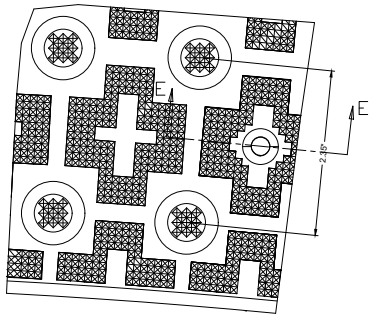

DETAIL B

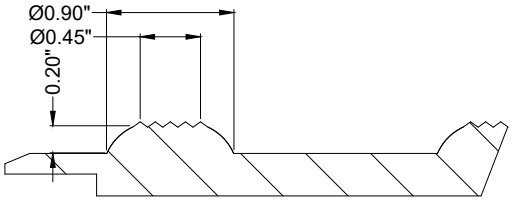

DETAIL D

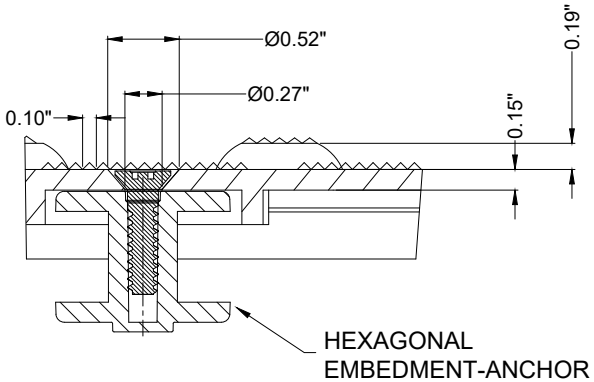

SECTION E-E

DETAIL A

surewerx.com

SureWerx

MATERIAL LIST

ITEM	DESCRIPTION	PART NO.	QTY
1	ACCESS TILE	ACC-R-2X2CRV	1
2	ANCHOR ASSEMBLY	ACC-R-ANCH	12

NOTE: ANCHOR ARE INCLUDED AND ASSEMBLED ON TILE.

REFERENCE DRAWINGS

DWG. NO.	DESCRIPTION

No.	DATE	REVISION	APPR.

SCALE 1"=1'-0" U.N.O. FULL SIZE ONLY 0 3 6 9 12 15

DESIGNED KES	DATE
DRAWN RWO	07/15/2024
DRAWN KES	
PROJECT MANAGER	
TRADE DETECTABLE WARNING SURFACE	PART NO. ACC-R-2X2CRV
MATERIAL POLYMER COMPOSITE	

SUBJECT **ACCESS TILE®**
TRUNCATED DOME, DETECTABLE WARNING TACTILE SURFACE

PROJECT **ACCESS TILE®**
TRUNCATED DOME, DETECTABLE WARNING TACTILE SURFACE
2X2 CURVED REPLACEABLE CAST IN PLACE INLINE DOME TILE DRAWING.

DRAWING NO.	REV. NO.
ACC-R-2X2CRV	0