AMICO
ALABAMA METAL INDUSTRIES CORPORATION

SUBMITTAL DETAILS
09 22 36

C-I Weep Trac™ Galvanized Steel Accessory

FOR CONTINUOUSLY INSULATED STUCCO AND STONE INSTALLATIONS

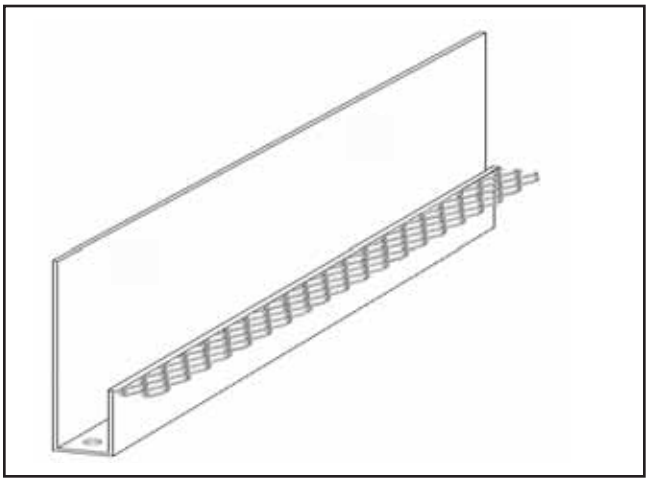

SCOPE
The 3½" nailing flange serves as flashing when weather resistant barriers or a rain screen is installed over the flange. The holes in the "trough" offer moisture weeping capabilities; over window and door heads, base of walls or other conditions that require drainage.

Submitted Product	Product Number	Product Dimensions
	CI-WT-Galv-CS	Per Drawing
Standard Package Lengths are 10-ft.		

DESCRIPTION
This C-I Weep Trac™ is installed as part of a drainage system for Continuous Insulated stucco or stone applications. Corner beads may be used to return the scratch/ finish coats into the wall.

MATERIALS
G60 Galvanized Steel to ASTM A653 with a minimum thickness (0.0172 inch) prior to galvanizing to meet or exceed ASTM C1063.

AMICO recommends the selection of an appropriate type of material for accessories shall be determined by applicable surrounding climatic and environmental conditions specific to the project location, such as salt air, industrial pollution, high moisture, or humidity as stated in ASTM C1063.

REFERENCES
Meets IBC 2510 & IBC 2511 (Foundation Weep Screed) Refer to ASTM C1063 for support spacing, lath selection, fastener selection and further information regarding the proper installation of metal lath and accessories. Meets Buy American Procurement Requirements. Made in the United States of America.

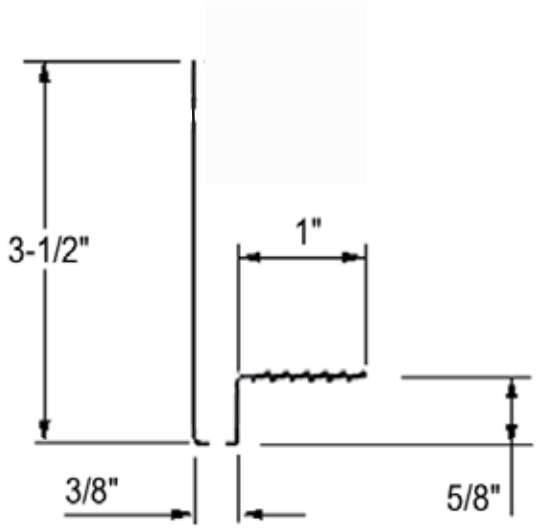

FIRE TESTING: The assembly including C-I Weep Trac™ meets NFPA 285-Standard Fire Test Method for Evaluation of Fire Propagation Characteristics of Exterior Non-Load-Bearing Wall Assemblies Containing Combustible Components.

LEED DATA
Both pre and post industrial recycled content are available – contact AMICO.
LEED documentation requested from our website at www.amico-lath.com//leed.htm

All information contained herein is accurate as known at the time of publication. SpecificationsmaychangeandAMICOreserves the right to change product specificationswithoutnoticeandwithoutincurringobligations.

ALABAMA METAL INDUSTRIES CORPORATION
3245 Fayette Avenue ◊ Birmingham, AL 35208 ◊ Telephone 800/366-2642 ◊ Facsimile 205/786-6527

AMICO C-I Weep Trac™
Dimensional Drawing

Galvanized Steel Construction

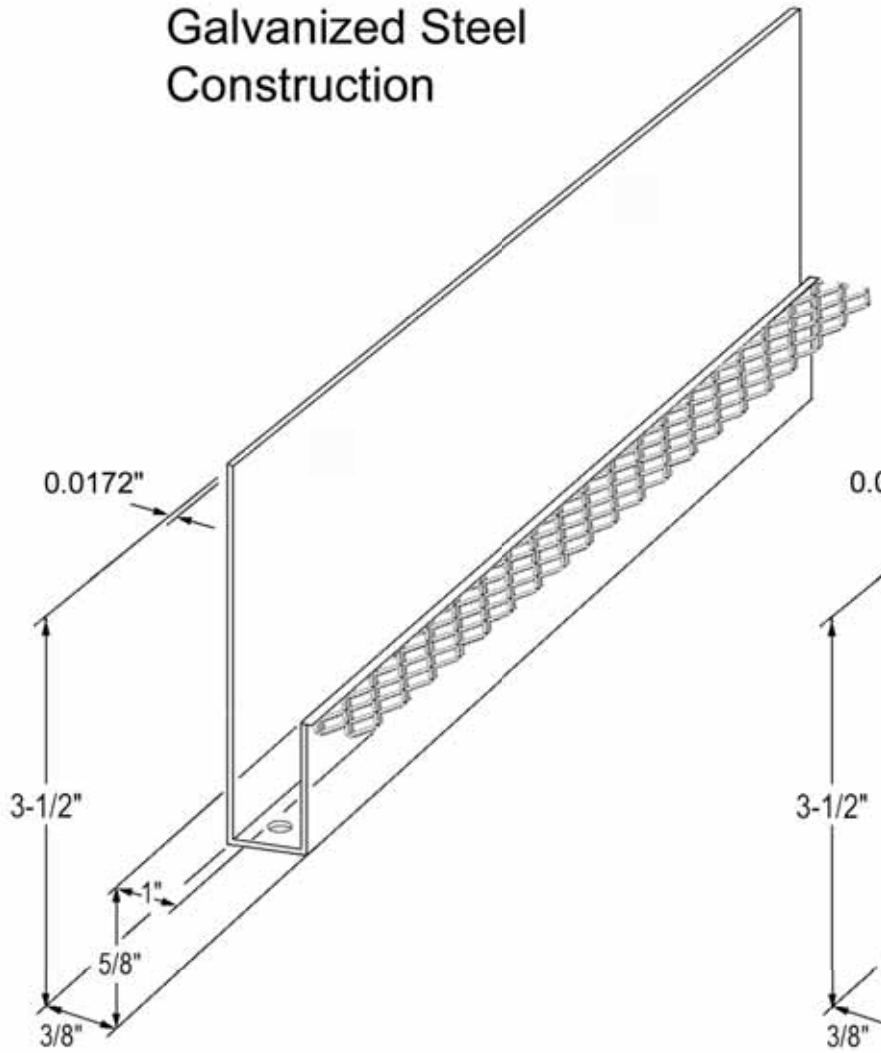

Zinc Alloy Construction

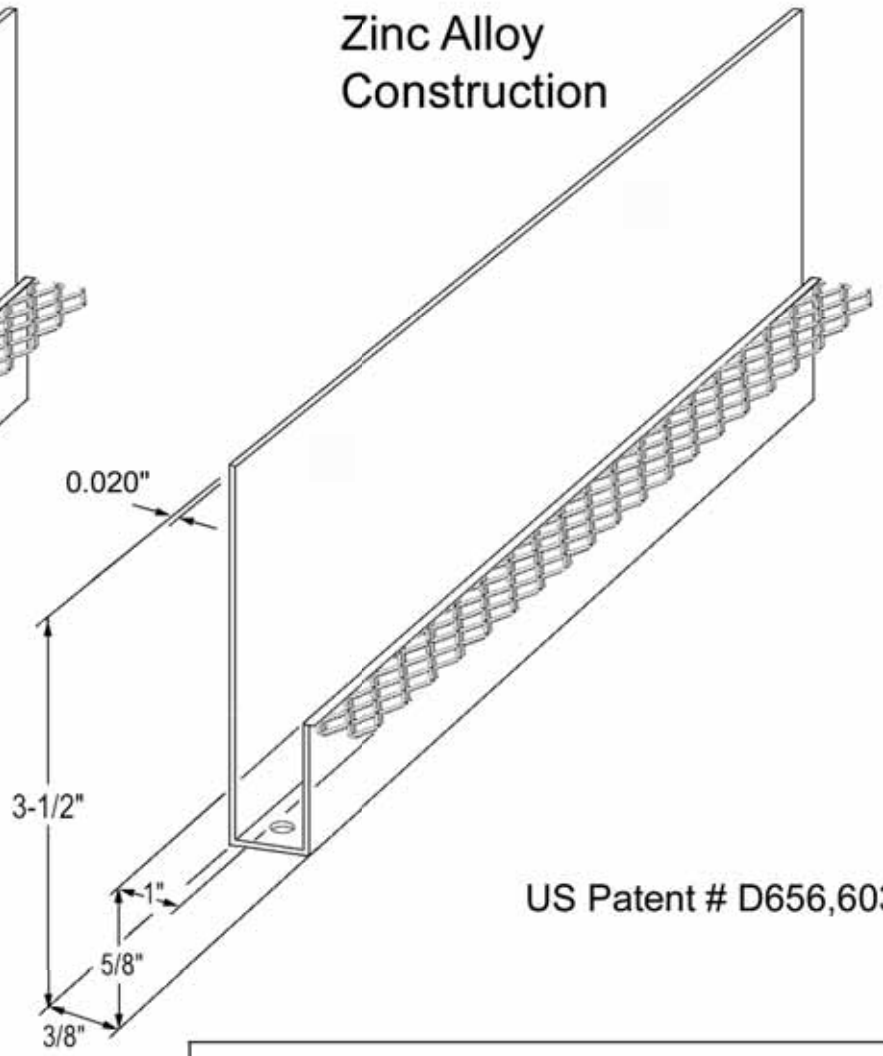

US Patent # D656,603

ALABAMA METAL INDUSTRIES CORPORATION
3245 Fayette Avenue
Birmingham, AL 35208
800/366-2642