TRANSITION MOLDINGS

Acoustical-to-Drywall Transition Molding

A FrameAll® Drywall Grid Solution

Acoustical-to-Drywall Transition Molding

Transition moldings save time and money and are easier to install.

KEY SELECTION ATTRIBUTES

- Fewer parts and pieces; combines acoustical molding with drywall taping flange
- Pre-punched vertical web to improve screw attachment
- Knurled and slotted integral taping flange on items 7901, 7902, 7904, 7905, 7906, 7907, and 7908 accommodates taping and finishing
- Protective film on the face of the wall molding flange of 7904PF and 7905PF facilitates faster, easier mudding, sanding, and taping
- Compatible with all types of framing including FrameAll® Drywall Grid and ShortSpan® framing
- new 7915 with 7/8" acoustical flange for seismic applications

VISUAL SELECTION

	Item No.	Flange	Length	Reveal	Pcs/ Ctn	LF/ Ctn.	
Shadow Reveal Transition Molding	**7901**	9/16"	120"	3/8"	12	120	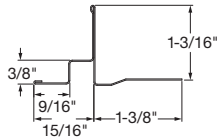
	7902	15/16"	120"	3/8"	12	120	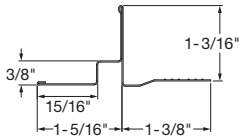
	7911	9/16"	120"	3/8" × 1/4"	12	120	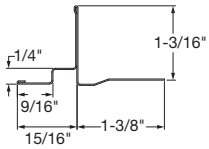
	7912	15/16"	120"	3/8" × 1/4"	12	120	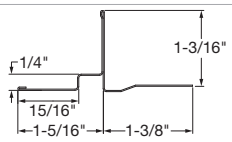
Flush Transition Molding	**7903**	9/16"	120"	1"	12	120	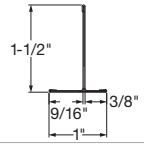
	7904 **7904PF***	15/16"	120"	N/A	12	120	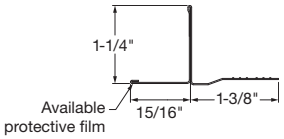
	7905 **7905PF***	9/16"	120"	N/A	12	120	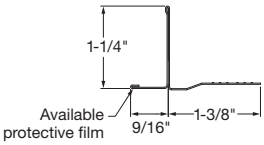

FRAMEALL® DRYWALL GRID – Standard

LEED® is a registered trademark of the U.S. Green Building Council; Living Building Challenge® (LBC) is a registered trademark of the International Living Future Institute®; WELL™ and Well Building Standard are trademarks of the International WELL Building Institute

Armstrong® World Industries

TRANSITION MOLDINGS

Acoustical-to-Drywall Transition Molding

LEED® WELL™ LBC

UP TO 61% RECYCLED CONTENT

Calculate sustainability with Ecomedes
armstrongceilings.com/ecomedes

energy management	construction waste mgmt	regional materials	design for flexibility	EPD	recyclable/ extended producer resp.	biobased materials	recycled content	sourcing of raw materials	material ingredient reporting	low emitting/ materials	lighting quality	acoustics
		✔	✔				✔	✔				

▲ LOCATION DEPENDENT

Well Building Standard™ (WELL)
Living Building Challenge® (LBC)

VISUAL SELECTION

	Item No.	Flange	Length	Transition Height	Pcs/ Ctn	LF/ Ctn.
F Vertical Transition Molding	**7906**	1/2"	120"	N/A	12	120
	7913	9/16"	120"	N/A	12	120
	7914	15/16"	120"	N/A	12	120
new	**7915**	7/8"	120"	N/A	12	120
Tegular Transition Molding	**7907**	9/16"	120"	15/16"	12	120
	7908	15/16"	120"	15/16"	12	120
Step Transition Molding	**7909**	15/16"	120"	1"	12	120
	7910	9/16"	120"	1"	12	120

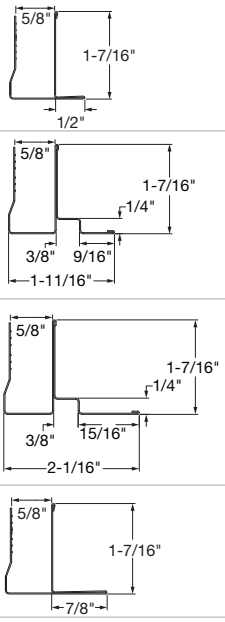

* Protective film applied to face of wall molding flange for easier finishing.

ACCESSORIES

2" Beam End Retaining Clip – Joins main beam or cross tee to wall molding and web of suspension system with no visible pop rivets.

ALBERC2 (aluminum) – 200 pcs
FZALBERC2 (aluminum) – 50 pcs

BERC2 (steel) – 200 pcs
FZBERC2 (steel) – 50 pcs

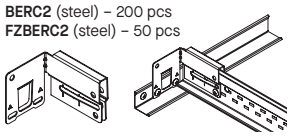

Knurled Angle Molding – Hemmed with prefinished exposed flanges.

KAM10 – 10 pcs
KAM12 – 10 pcs

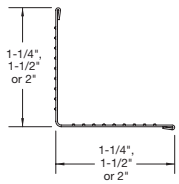

TRANSITION MOLDINGS

Acoustical-to-Drywall Transition Molding

LEED® WELL™ LBC

UP TO 61% RECYCLED CONTENT

Calculate sustainability with Ecomedes armstrongceilings.com/ecomedes

energy management	construction waste mgmt	regional materials	design for flexibility	EPD	recyclable/ extended producer resp.	biobased materials	recycled content	sourcing of raw materials	material ingredient reporting	low emitting/ materials	lighting quality	acoustics
		✔	✔				✔	✔				

LOCATION DEPENDENT

Well Building Standard™ (WELL)
Living Building Challenge® (LBC)

INSTALLATION DETAILS

Drywall to Acoustical (Acoustical Flange with 3/8" reveal) 7901 – 9/16" and 7902 – 15/16"

Flush

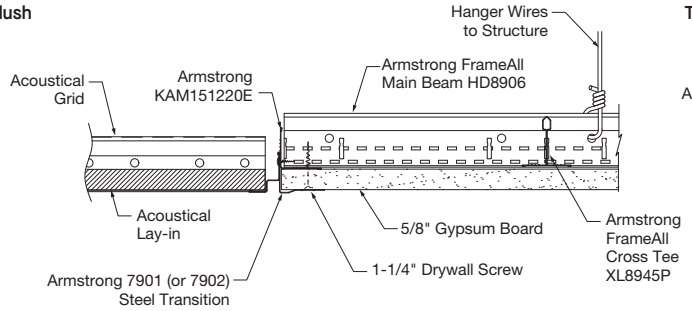

7901 or 7902

Tegular

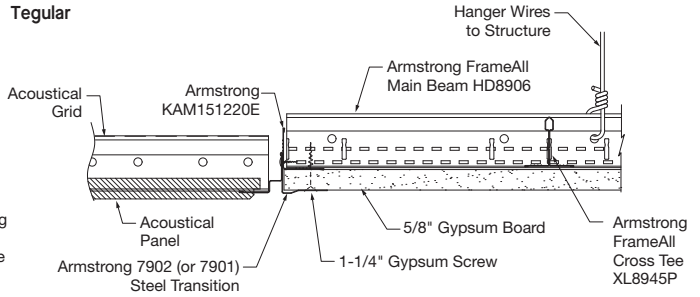

7901 or 7902

Drywall to Acoustical 1" Step 7909 – 15/16" and 7910 – 9/16"

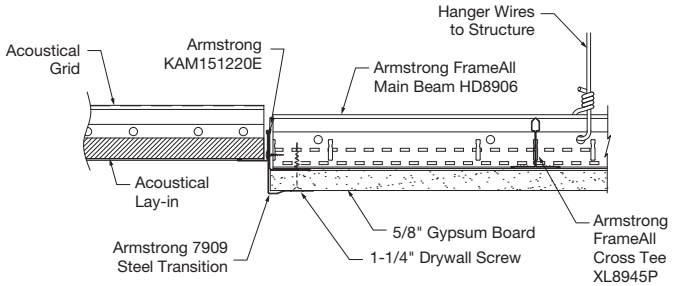

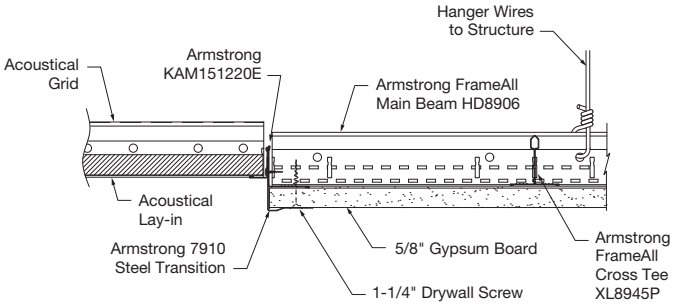

Drywall to Acoustical (1" Inverted T) 7903

Flush

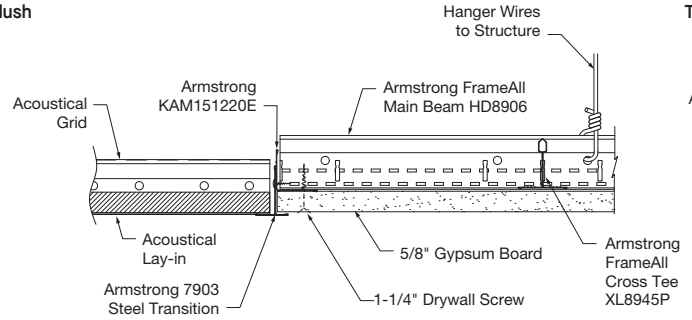

Tegular

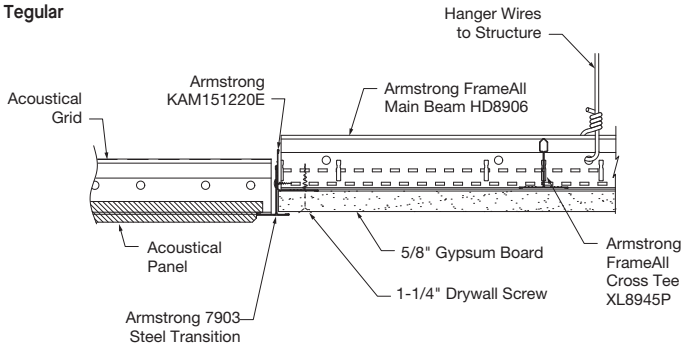

Drywall to Acoustical Flush Transition 7904/7904PF – 15/16" and 7905/7905PF – 9/16"

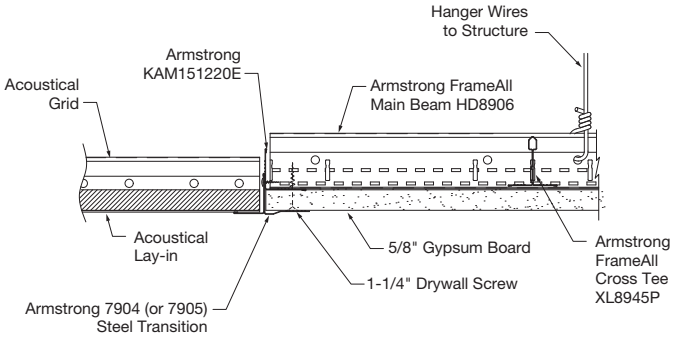

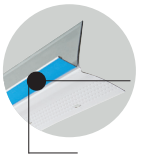

Items 7904PF and 7905PF feature protective film applied to the face of the wall molding flange for faster, easier finishing.

FRAMEALL® DRYWALL GRID – Standard

TRANSITION MOLDINGS

Acoustical-to-Drywall Transition Molding

LEED® WELL™ LBC

UP TO 61% RECYCLED CONTENT

Calculate sustainability with Ecomedes
armstrongceilings.com/ecomedes

energy management	construction waste mgmt	regional materials	design for flexibility	EPD	recyclable/ extended producer resp.	biobased materials	recycled content	sourcing of raw materials	material ingredient reporting	low emitting/ materials	lighting quality	acoustics
		✔	✔				✔	✔				

▲ LOCATION DEPENDENT

Well Building Standard™ (WELL)
Living Building Challenge® (LBC)

INSTALLATION DETAILS (CONTINUED)

F Vertical Transition Molding Flush 7906

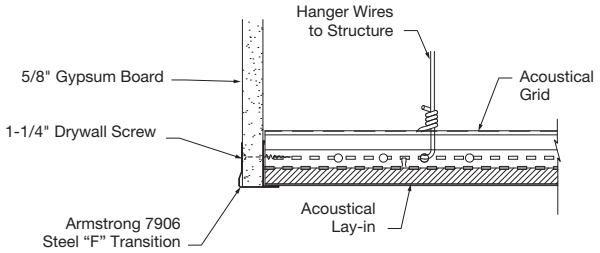

F Vertical Transition Molding Flush 7915

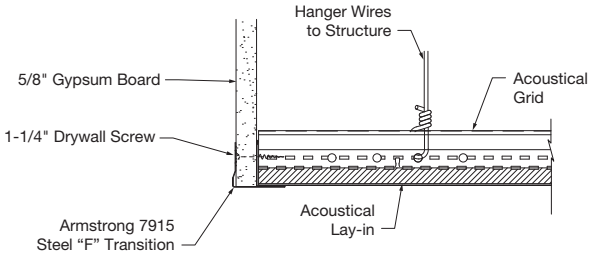

Drywall-to-Acoustical Tegular 7907 – 9/16" and 7908 – 15/16"

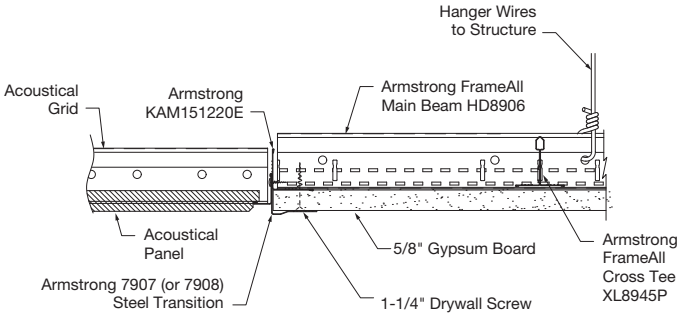

Drywall to Acoustical (Acoustical Flange with 3/8" × 1/4" reveal) 7911 – 9/16" and 7912 – 15/16"

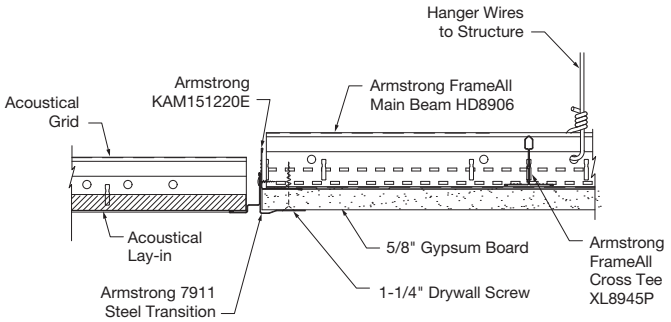

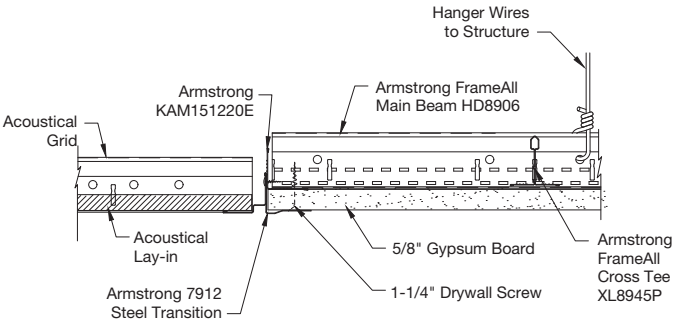

Stepped 7913 – 9/16" and 7914 – 15/16"

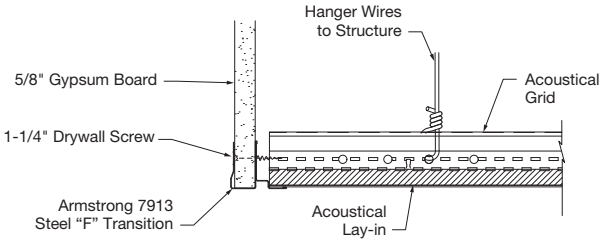

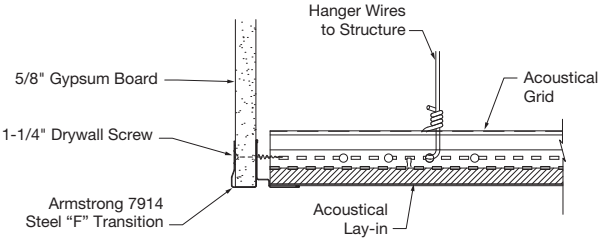

LEED® is a registered trademark of the U.S. Green Building Council; Living Building Challenge® (LBC) is a registered trademark of the International Living Future Institute®; WELL™ and Well Building Standard are trademarks of the International WELL Building Institute © 2025 AWI Licensing LLC

Armstrong® World Industries