SOUNDSCAPES®

Acoustical Canopies
fine texture

FAST 4 WEEKS or Less

FAST134
Select Items Ship Fast
armstrongceilings.com/fast134

SoundScapes Canopies in Rainstorm, Mist, Topaz, Light Grey, and White

CAD/Revit® drawings at:
armstrongceilings.com/cadrevit

Coordinating Nature Inspired Colors

Tectum® DesignArt™ | SoundScapes® Blades

These shapely canopies enhance acoustics with spot absorption to define spaces.

KEY SELECTION ATTRIBUTES

- new Now available in 15 colors inspired by nature
- Hill and valley designs available in two sizes
- Adjustable to special heights
- Aesthetically define spaces with excellent sound absorption up to 0.95 NRC
- Embedded flush-mounted hardware system for clean look
- Select products included in the FAST134 program – ready to ship in 4 weeks or less
- CleanAssure™ family of products – includes disinfectable panels, suspension systems, and trim
- Coordinate with SoundScapes® Shapes and SoundScapes Blades to add cohesion to your space
- Mold and mildew-resistant surface
- Seismic-tested
- ASTM E84 Class A Fire Performance
- Made in the U.S.A. of domestic and global content
- Build America, Buy America (BABA) Act compliant

ELEVATION VIEWS

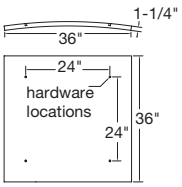

Hill – Hardware side

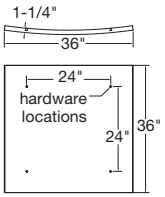

Valley – Hardware side

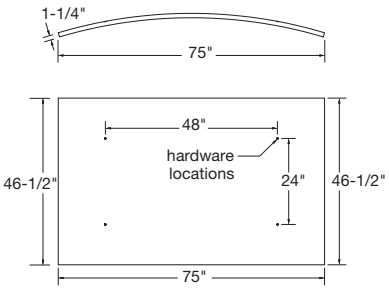

Hill – Hardware side

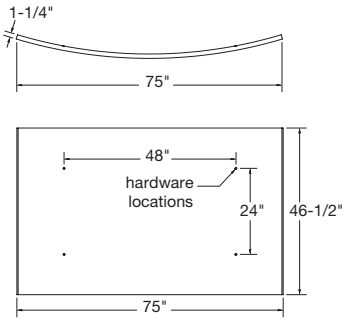

Valley – Hardware side

COLORS
Due to printing limitations, shade may vary from actual product.

new Painted

White (DWH) | Black (DBL) | Riverstone (DRV) | Stone (DSE) | Light Grey (DLG)

Custom Colors Available

Oat (DOT) | Sandstone (DSS) | Boxwood (DBW) | Fern (DFN) | Ivy (DIV)

Ocean (DOC) | Twilight (DTT) | Rainstorm (DRS) | Mist (DMT) | Topaz (DTZ)

For premium and custom capabilities, contact ASQuote@armstrongceilings.com

TechLine 877 276-7876
armstrongceilings.com/soundscapescanopies

Armstrong® World Industries

SOUNDSCAPES®

Acoustical Canopies
fine texture

LEED® WELL™ LBC

40% RECYCLED CONTENT

For LEED contribution contact TechLine

energy management	construction waste mgmt	regional materials	design for flexibility	EPD	recyclable/ extended producer resp.	biobased materials	recycled content	sourcing of raw materials	material ingredient reporting	low emitting/ materials	lighting quality	acoustics
✓		✓	✓				✓				✓	✓

▲ LOCATION DEPENDENT

VISUAL SELECTION

PERFORMANCE
Dots represent high level of performance.

	Item No.◆	Description	Dimensions (Inches)	Sound Absorption* (NRC)	Fire Rating	Light Reflect (White Only)	Anti-Mold/ Mildew (Bio-Block)	Fog (CleanAssure™ Disinfectable Panels)	Spray (CleanAssure™ Disinfectable Panels)	Wash (DURABILITY)	Soil (DURABILITY)
SOUNDSCAPES® Acoustical Canopies	**6258F01H01 _ _ _** (formerly item no. 6258)	Hill Canopy	46-1/2 × 75 × 1-1/4"	0.95 •	Class A	0.88 •	•	•	•	•	•
	6259F01V01 _ _ _ (formerly item no. 6259)	Valley Canopy	46-1/2 × 75 × 1-1/4"	0.95 •	Class A	0.88 •	•	•	•	•	•
	6260F01H02 _ _ _ (formerly item no. 6260)	Hill Canopy	36 × 36 × 1-1/4"	0.95 •	Class A	0.88 •	•	•	•	•	•
	6261F01V02 _ _ _ (formerly item no. 6261)	Valley Canopy	36 × 36 × 1-1/4"	0.95 •	Class A	0.88 •	•	•	•	•	•

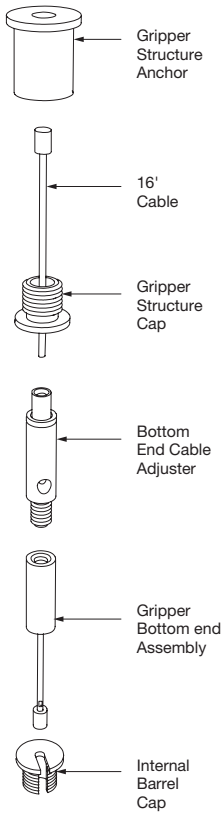

FAST 4 WEEKS or Less

FAST134 program items ready to ship from manufacturer in 4 weeks or less.
Up-to-date lead times and product options (sizes and colors) at armstrongceilings.com/fast134

◆ Add 3-letter color suffix to item number when specifying or ordering (e.g. 6258F01 D W H)
NOTE: SoundScapes® Canopies kits include canopies, installation hardware, and 16' cables.
* NRC is value is dependent upon spacing.

ACCESSORIES

Item Number	Description
625530	Extended Hanging Cables – Replaces 16' cables in suspension kit. Includes four 30' aircraft cables
7006	Escutcheon Kit – Used when hanging canopy below an existing ceiling; two kits needed per SoundScapes canopy. Includes two collars with set screws and two 2" escutcheons

PHYSICAL DATA

Material
Mineral fiber pre-formed in canopy shape

Panel Arc
Fixed 129" radius

Surface Finish and Edge Detail
DuraBrite® scrim on all sides, finished square edges

Fire Performance
Class A: ASTM E84 Class A: Flame Spread Index 25 or under and Smoke Developed Index 50 or less.

Canopies may obstruct or skew the planned fire sprinkler water distribution pattern, or possibly delay or accelerate the activation of the sprinkler or fire detection systems by channeling heat from a fire either toward or away from the device. Designers and installers are advised to consult a fire protection engineer, NFPA 13, and local codes for installation.

Design Support
For custom design assistance contact ProjectWorks® Design Services or visit armstrongceilings.com/projectworks

Design Considerations
SoundScapes acoustical canopies cannot be cut, drilled, or altered in any way. Panels can be damaged by exposure to moisture, to high temperatures, and to high humidity. They are not approved for exterior application.

Canopies must be installed a minimum of 18" apart in seismic areas. Lipping may be visible in installations closer than 18".

Field painting may affect the acoustical and/or fire performance, is not recommended, and will void the product warranty.

Special care in installation and handling must be taken with color canopies to avoid surface damage to the paint finish.

The SoundScapes cable hanging system must not hang from any commercial ceiling suspension system. The canopy must not be used to support any other material.

Installation Considerations
Canopies must remain in cartons until ready to hang. They require two people to install a panel safely. Do not remove the edge protectors until panel is installed. Canopies in colors require additional care to reduce scuffing.

Seismic Restraint
SoundScapes canopies are approved for application in all seismic areas when installed per the seismic guidelines in the Armstrong ceilings installation instructions.

Suspension System
Embedded, flush-mounted hardware system and aircraft cables provided in panel kits.

FAST134 Program Considerations
Size of Job Matters: Big jobs, over 2500 SF or 50 pieces for shapes/vertical elements will have longer lead times.

Location Matters: Transit time not included. We are ready to ship in 1 week on FAST1 items. However, transit to the states west of Wyoming may add time.

Distributor Truck Schedule Matters: We rely on distribution to help move products around the country. When speed matters, work with your local distributor to ensure FAST134 service.

Stock vs. Made-to-Order Matters: FAST3 & FAST4 items are made-to-order and will ship direct to distributor. FAST1 (stocked items) will go through distribution and depend on distributor truck schedules.

Warranty
Details at armstrongceilings.com/warranty

Weight
Bulk packaged per order

6258F01, 6259F01 – 50 LBS per panel
6260F01, 6261F01 – 19.4 LBS per panel

TechLine / 1 877 276-7876
armstrongceilings.com/soundscapescanopies

BPCS-5088-1024

LEED® is a registered trademark of the U.S. Green Building Council; Living Building Challenge® (LBC) is a registered trademark of the International Living Future Institute®; WELL™ and WELL Building Standard are trademarks of the International WELL Building Institute; all other trademarks used herein are the property of AWI Licensing LLC and/or its affiliates © 2024 AWI Licensing LLC

Armstrong® World Industries