Standard Suspended Ceilings

Assembly and Installation Instructions

1. GENERAL

1.1 This installation document is intended as a general application overview, covering essential steps of a suspended ceiling installation. This document represents standard methods as supported by the manufacturer and are in addition to following the standards outlined in ASTM C636. These standards represent the manufacturers' recommendations; however, all installations are subject to requirements set forth by the authority having jurisdiction.

1.2 These instructions should be supplemented with Armstrong's "The 20 Minute Ceiling Installer" video for examples of the installation steps, as well as the product specific installation instructions of the product being installed.

1.3 Design and Installation Consideration

When installing Low Embodied Carbon (LEC) panels, it's crucial to be aware that the low-emitting carbon substrate may result in dust transferring to the tile's surface during installation. Take care while cutting, and ensure to only touch the panel face with clean gloves.

2. TOOLS REQUIRED

2.1 Here is a list of the most common tools needed for installing a suspended ceiling. Required tools and materials may vary based on job-specific conditions.

- PPE: Cut-resistant gloves, safety glasses, hard hat, steel-toe boots
- Ladder(s), rolling scaffold
- Lasers: horizontal line leveling, vertical alignment, point
- String line: control/dry line
- Chalk line
- Tape measure
- Carpenter pencil
- Pop riveter, aluminum white pop rivets
- Lineman pliers with wire cutter
- Hammer
- Screwdrivers: slotted, Phillips
- Spring clamps: 5 to 7 (small)
- Utility knife
- Tool belt
- Hole saw
- Fasteners: wall molding attachment
- Cordless drill with screw tips and drill bits
- Snips: metal cutting tin snips
- Rout hole punch

Armstrong®
World Industries

3. INSTALLATION LAYOUT

3.1 Grid Layout

3.1.1 There are many different grid layouts used for different products, panel sizes, or fixture integration. Below are guidelines for some of the more typical layouts.

3.1.1.1 Standard 2' x 4' ***(Fig 1)***

- Main beams spaced 48" O.C.
- 4' cross tees shall intersect the main beams at 90° every 24" O.C.

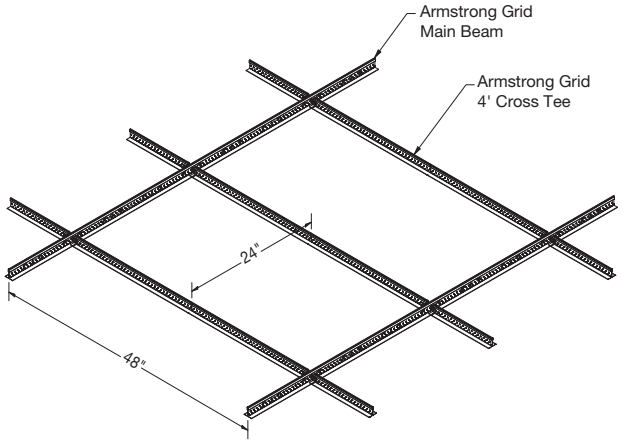

(Fig 1)

3.1.1.2 Standard 2' x 2' ***(Fig 2)***

- Main beams spaced 48" O.C.
- 4' cross tees shall intersect the main beams at 90° every 24" O.C.
- 2' cross tees shall be installed at the midpoints of the 4' cross tees, creating 24" x 24" modules.

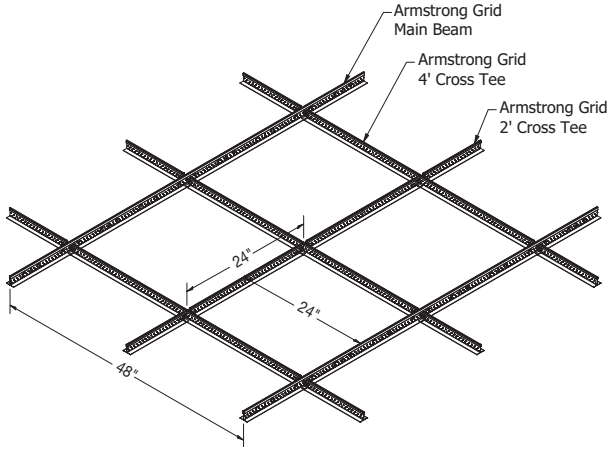

(Fig 2)

3.1.1.3 H-Layout / Cross-Hatch ***(Fig 3)***

- Cross-hatched layouts differ from standard layouts by increasing the spacing of the cross tees that span the mains (typically 24" O.C.) to a distance equal to or greater than the hanger spacing along the mains (typically 48" O.C.).
- When using cross-hatched layouts, cross tees should be equivalent to mains in load carrying capacity (Lbs/LF) since they are now carrying the same load as the mains based on spacing. Refer to grid product data pages for load test data of grid components.

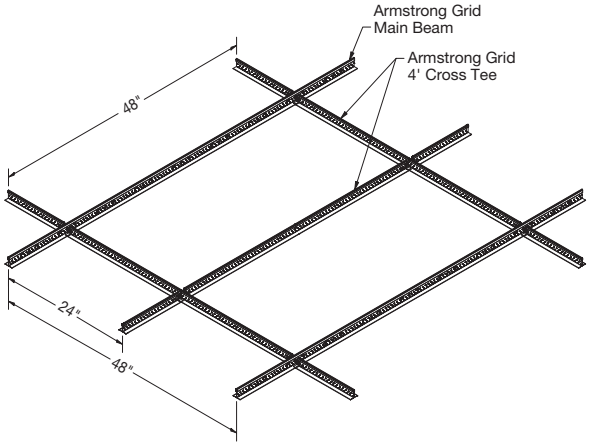

(Fig 3)

3.1.1.4 Plank Sizes

Grid layouts for plank sizes can be constructed in three different ways. The end solution may be chosen based on the desired panel orientation in relation to the mains and load on the grid components:

1. Main spacing equal to panel length (panel length perpendicular to mains), cross tees spanning the mains at spacing equal to panel width ***(Fig 4)***.

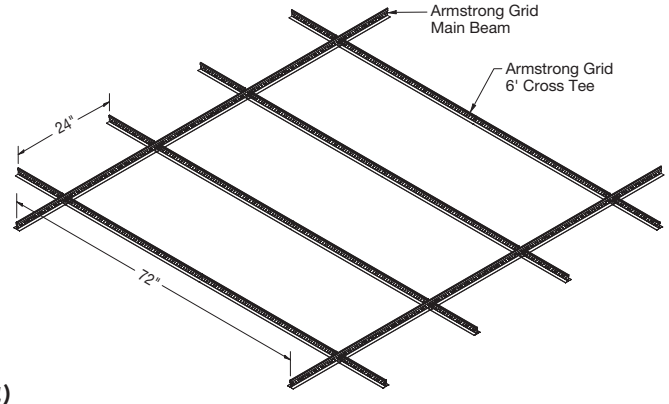

(Fig 4)

Refer to the grid product data pages for load test data specific to the length of cross tee being used. Supplemental wires may be required based on the span of the grid and weight of the ceiling product being installed.

2. Main spacing equal to panel width (mains parallel to panel length), cross tees spanning the mains at spacing equal to panel length ***(Fig 5)***.

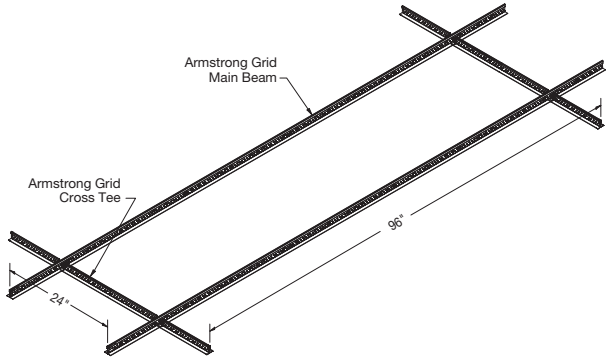

(Fig 5)

3. Cross-hatching of the grid components, allowing panel length to run parallel with mains without main spacing being equal to panel width ***(Fig 6)***.

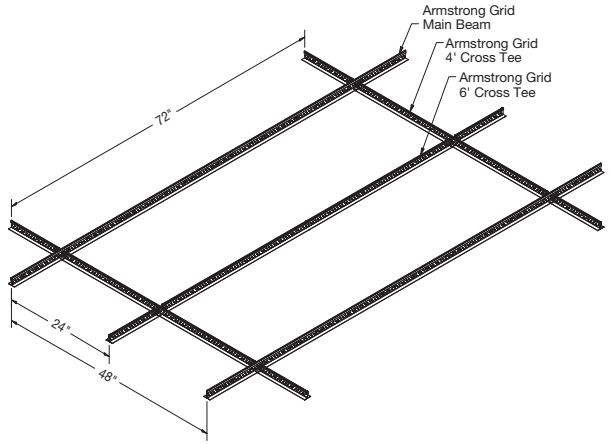

(Fig 6)

When cross-hatching, consider the increased load on the cross tees, especially the cross tees spanning the mains. Refer to the grid product data pages for load test data specific to the length of cross tee being used. Supplemental wires may be required based on the span of the grid and weight of the ceiling product being installed.

3.1.1.5 Running Bond / Staggered

Running bond or staggered layouts differ from standard layouts by alternating the grid openings between different rows of mains. This results in single cross tees occupying rout holes. These single cross tee connections must be reinforced to meet code requirements for connection strength. Armstrong's recommended solution is the Single Tee Adapter Clip (STAC) ***(Fig 7)***.

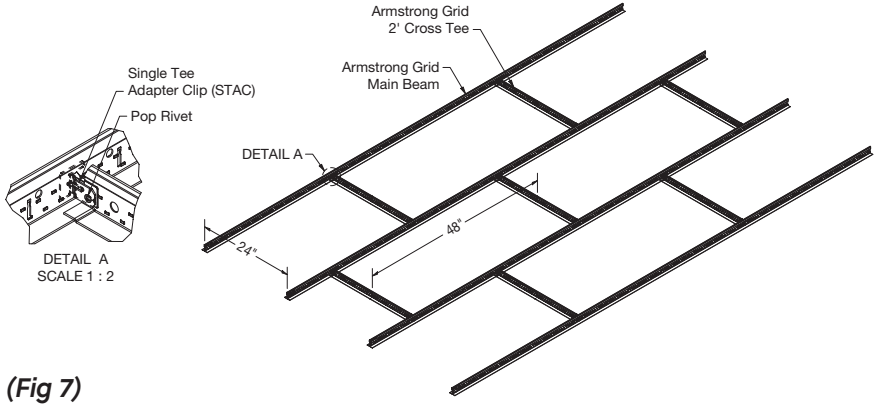

(Fig 7)

3.2 Room Layout

Proper layout within a space is crucial for a good installation. Some layouts may have a starting point established by the architect noted on the prints. Examples of starting points may be for a specific border dimension, full size borders, or referenced from lights or columns. It is important to check the project plans before installation.

3.2.1 Calculating Equal Borders

The most pleasing visual is achieved when the border panels are no less than 10" wide, and the opposite wall has the exact same size border panel achieving proper room balance. For installations that require equal borders, the following steps will help you layout an installation with equal borders on opposite sides of the space.

- Determine the direction of the main beams and panel length.
- Divide each dimension of the space (length and width) by the panel length in that direction.

  Ex: 28' 9" (room width) / 2' (panel width) = 14 full size panels and a 9" remainder

- Divide the remainder to get even opposite border panels. If this results in border panels less than 10" you will need to add a full panel to the remainder so that the border panels are greater than 10".

  Ex: 9" (remainder) / 2 (borders) = 4-1/2" border (too small)

  24" (full panel width) + 9" = 33" (new remainder)

  33" / 2 (borders) = 16-1/2" borders with 13 full size panels

3.3 Plenum

Allow at least 3" below the old ceiling, duct work, pipes, or wiring as clearance to maneuver a ceiling panel into the opening of the grid.

4. WALL MOLDING

4.1 all molding is not considered a load bearing component of most suspended ceiling systems, but it must be securely attached to the wall every 16" - 24" O.C.

4.2 Mitered Corners

4.2.1 Inside Corners

When you get to your inside corners, a finished 45° miter is a much more pleasing visual than simply overlaying butt cuts. All you have to do is mark and cut 45° on the lower angle then overlay the butt cut upper angle for a perfect mitered visual from below ***(Fig 8)***.

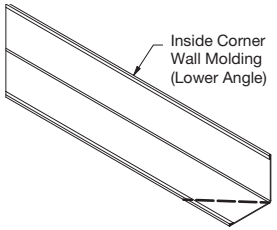

Step 1 - Mark lower angle wall molding along the bottom flange for a 45° mitered cut.

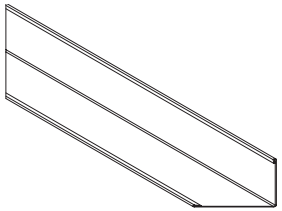

Step 2 - Make a 45° angled cut along the marked bottom flange of the lower angle molding.

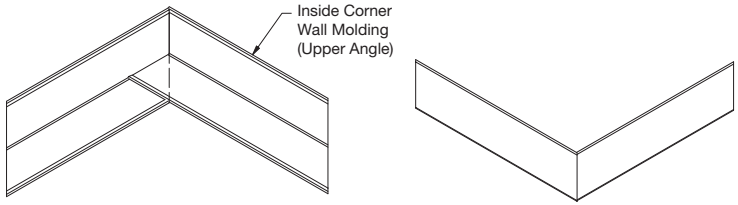

Step 3 - Overlay the butt cut upper angle wall molding over the lower angle wall molding with the 45° cut for a perfect mitered visual from below.

(Fig 8)

4.2.2 Outside Corners

The outside corners require a little more attention, but are still easy to achieve a clean mitered visual. Simply let the angle override past the corner, then square butt cut to length. Next, cut away the vertical flange, leaving an exposed horizontal tab. Do this to both angles that approach the outside corner. After overlaying them at the corner, mark where the 45° miter cut will occur on the lower angle. Raise your upper angle and make the 45° cut on the lower angle only. Square cut the upper angle to length and you're finished with a corner that looks perfectly mitered, but is structurally sound. A spring clamp will hold the corner into place while you do the final attachment to the wall ***(Fig 9)***.

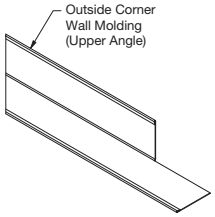

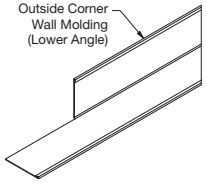

Step 1 - Allow the upper wall molding angle to override past the corner and square butt cut to length. Next, cut away part of the vertical flange to leave the lower tab exposed. Do this to both angles as shown.

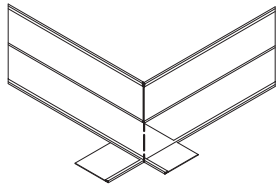

Step 2 - Overlay the two outside corner angles and mark where the 45° miter cut will occur on the lower angle wall molding.

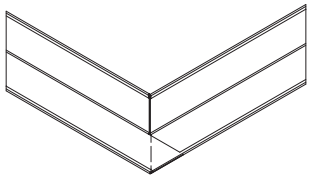

Step 3 - Raise the upper angle out of the way and make the mitered cut on the lower angle. Then, square cut the upper angle to length.

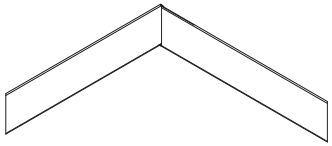

The finished result creates a perfectly mitered visual from below.

(Fig 9)

4.3 Some systems may require the use of a Structural Wall Molding, with additional instructions on installation requirements for this component.

5. SUSPENSION POINTS

5.1 The suspension system must be supported with hanger wire attached to the structure.

5.2 Holding power tests certified by the manufacturer of the fasteners must be available upon request.

5.3 Hanger wires should be a minimum 12-gauge galvanized, soft-annealed, mild steel wire.

5.4 The minimum drop for hanger wire is 4", which is from the bulb of the grid to the structure. This will allow enough room to wrap your wire as well as remove ceiling panels. There is not a maximum length for suspending acoustical ceilings with 12 gauge hanger wire, unless restrictions are in place by your local code authority. Hanger wire splices are available when wire extension is necessary.

5.5 Hanger wires are typically spaced no more than 4' O.C. along the main beams, but may be spaced further if allowed by local code officials and if it is in compliance with load carrying capabilities.

5.6 Each hanger wire must not be more than one in six out of plumb, which means there should be at least 6" of vertical drop for every 1" of lateral movement ***(Fig 10)***. For example, if you move a wire 2" out of plumb, you must have at least 12" of vertical drop. When this standard is not met, an equally sloped counter splay wire must be added in the opposing direction to maintain symmetry (ASTM C636) ***(Fig 11)***.

5.7 Hanger wire must be wrapped around itself a minimum of three full turns within 3" (ASTM C636 – subject to additional codes) ***(Fig 12)***.

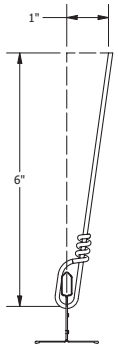

(Fig 10)

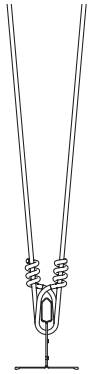

(Fig 11)

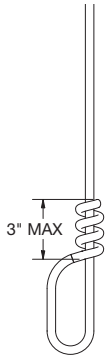

(Fig 12)

5.8 When installing fire rated main beams, all fire expansion relief cut outs must have a hanger wire within three inches (ASTM C636) ***(Fig 13)***.

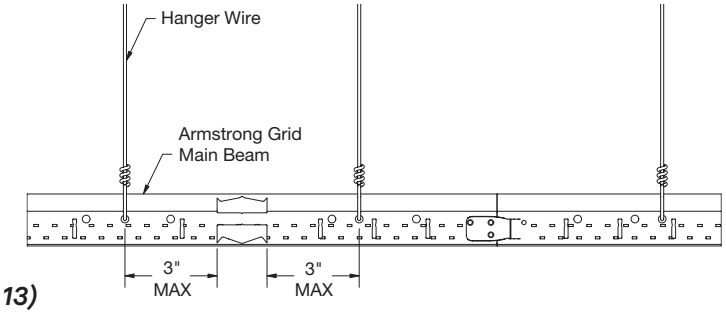

(Fig 13)

6. SUSPENSION SYSTEM INSTALLATION STANDARDS

6.1 Suspension systems, whether 9/16" or 15/16", shall be installed to meet the minimum requirements established in the ASTM C636 standard, and any other requirements established by local code.

6.2 All grid components used must be rated to carry the appropriate load per ASTM C635 and E3090. Consult the grid product data page for load carrying capabilities.

6.3 Main beams must be level to within 1/4" in 10', determined by measurements taken below the hanger points with the hanging wires tied tight. This process can be aided with the use of a level laser.

6.4 Certain products may call out a specific squareness requirement to ensure a satisfactory installation. Ensuring the grid installation is square can be done with perpendicular dry lines (control lines) or a 90° alignment laser to install the grid off of. Squareness of individual modules can also be verified by measuring opposite diagonals within an opening. The measurements of the opposite diagonals will be the same if they are square. If the grid is not square, push the module's cross tees to the right and clamp to remove slack and measure again.

7. CEILING PANEL INSTALLATION

7.1 Edge Detail Types

There are several different types of edge details for panels. Refer to the product data page for edge profile type and Suspension Drawing number that can be referenced in the back of the Specifier's Reference. Some common edge details are:

7.1.1 Square Lay-in

Square lay-in panels do not have any cuts on the edges. Each edge will provide a 90° corner. They install above the grid and should generally be installed in 15/16" grid ***(Fig 14)***.

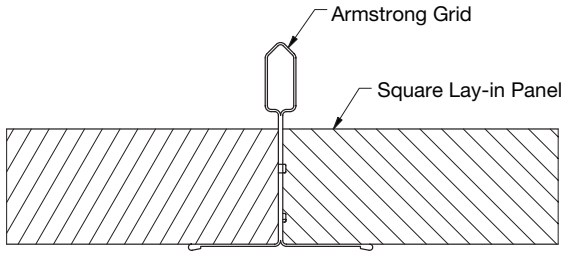

(Fig 14)

7.1.2 Tegular

Tegular panels will have a step cut out around the edge. They will also install above the grid. Tegular edge details can vary in several characteristics, such as square or beveled, or for 9/16" or 15/16". Refer to the product data page for details regarding a specific product ***(Fig 15)***.

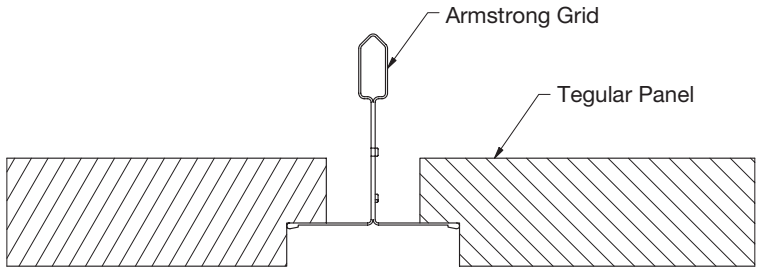

(Fig 15)

7.1.3 Vector/Concealed

Vector and Concealed panels install from below the grid. Each panel will have an A/B side and a C/D side. Only the A/B sides will engage with the grid ***(Fig 16)***. The C/D sides will act as a reverse tegular edge and will butt up next to the grid flange, but not engage with it. Refer to product specific installation instructions for information on Vector and Concealed panel edge details.

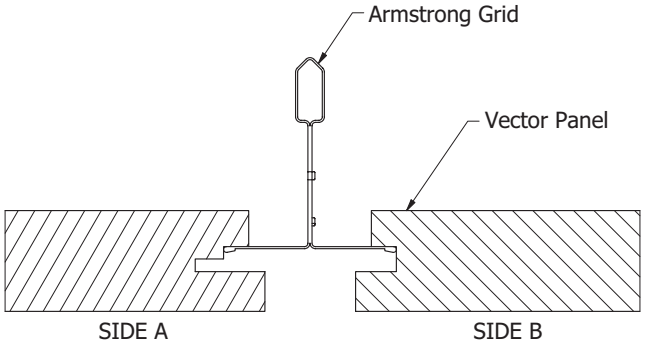

(Fig 16)

7.1.4 High CAC - Lay-in and Tegular

Calla® PrivAssure® and Lyra® High CAC panels are 1-3/4" high and install above the grid. Panels cannot be modified in order to ensure published CAC values. Panels are designed for a tight fit into the suspension system. Ensure hanger wire wraps are tied tightly. Install panels toward hanger wires or MEP fixtures first and then seat in grid. MEP fixtures that require clips or brackets to install over the bulb of the grid will interfere with the installation and fit of these panels and are not recommended. Use a longer blade to cut for borders/length or use of a table saw is preferred ***(Figs 16A & 16B).***

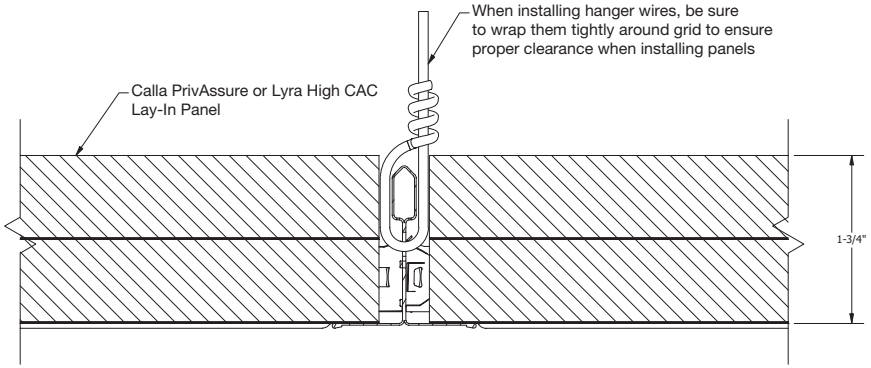

(Fig 16a)

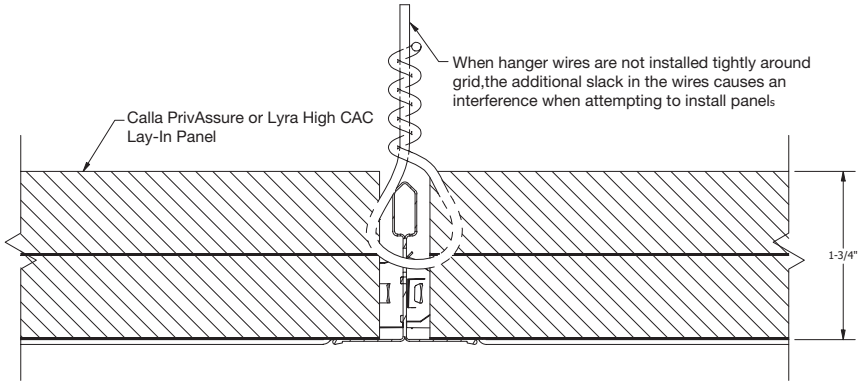

(Fig 16b)

7.2 Perimeter Treatment

7.2.1 Perimeter panels less than full size shall be installed either by concealing the cut edge on the horizontal flange of a perimeter molding (option A), or by re-cutting the Tegular edge detail (option B).

7.2.2 Option A: Panel Face Resting on Molding
For option A, when the face of the panel rests on the molding, Spring Border Clips (item 7870) should be used for proper panel alignment and to prevent the possibility of the panel shifting toward the wall far enough to permit the opposite edge to drop off the grid flange ***(Fig 17)***.

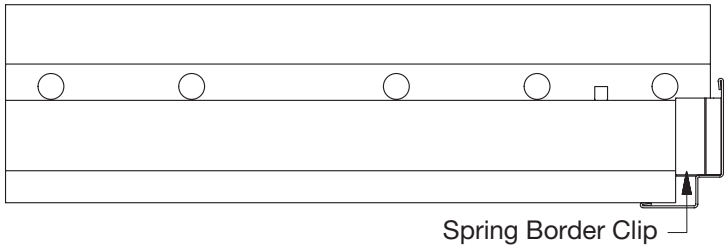

(Fig 17)

7.2.3 Option B: Re-cut the Edge Detail
For option B, the suspension system rests directly on the horizontal flange of the molding. Tegular edges will have to be field-cut to allow the panel face to drop 1/4" below the grid. All field-cut edges "exposed to view" should be colored to match the factory finish. Armstrong SuperCoat™ Ceiling Panel Touch-up Paint is recommended ***(Fig 18)***.

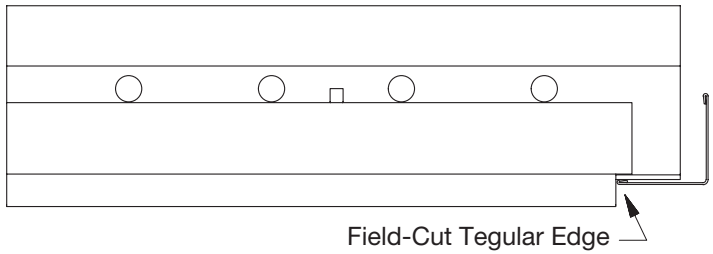

(Fig 18)

IMPORTANT NOTE: When installing Low Embodied Carbon (LEC) panels, be cautious during cutting. The low-emitting carbon substrate may result in dust transferring to the tile's surface during installation. Take care when cutting the tiles, ensure that you only touch the panel face with clean gloves.

7.3 Cleaning

7.3.1 Remove dust or loose dirt with a brush or vacuum with an attachment used for upholstery. Always clean in one direction to avoid rubbing dirt or debris into the tile.

7.3.2 Remove pencil marks, smudges, and stubborn dirt with an ordinary art gum eraser.

7.3.3 Most mineral fiber and fiberglass ceilings may be cleaned with a damp cloth or sponge and mild soap. Use as little water as possible and wipe the soapy film off with a clean, damp cloth or sponge.

7.3.4 Some ceilings can withstand scrubbing, moisture, and germicidal cleaners. Be sure to reference the product specific data page to read the performance features of the ceiling panel.

7.4 Touch-up Paint

7.4.1 Armstrong cannot guarantee the printed performance of a ceiling panel after it has been repainted. Repainting can impact performance features such as light reflectance, fire resistance, acoustical performance, anti-sag, and any mold-inhibiting or retarding treatment.

7.4.2 All warranties will be voided by field painting.

7.4.3 Armstrong SuperCoat™ Ceiling Panel Touch-up Paint is recommended to cover any blemishes or deeper gouges.

8. LIGHTING LAYOUT CONSIDERATIONS

8.1 Lighting may impact the grid layout by either requiring an H-layout/cross-hatching or by creating single cross tee connections (unopposed cross tees). These conditions must be addressed by following the instructions in sections 3.1.1.3 (H-Layout / Cross-Hatch) and 3.1.1.5 (Running Bond / Staggered).

8.2 All light fixtures must be independently supported unless noted otherwise in the product specific installation instructions.

8.3 Follow the lighting manufacturer installation instructions and contact our local lighting manufacturer representative with any questions.

9. HELPFUL ACCESSORIES AND CLIPS

9.1 BERC2 – 2" Beam End Retaining Clip

Joins main beam or cross tee to wall molding via locking barbs without pop rivets or screws ***(Fig 19)***.

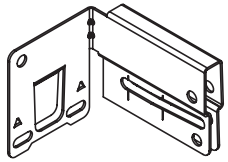

(Fig 19)

9.2 XTAC – Cross Tee Adapter Clip

Used to attach field cut cross tees to main beams ***(Fig 20)***.

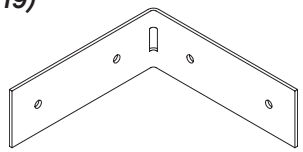

(Fig 20)

9.3 GC3W – Grip Clip 3-Way

Joins main beams to cross tee via locking barbs without pop rivets or screws ***(Fig 21)***.

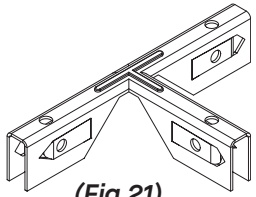

(Fig 21)

9.4 GCWA – Grip Clip Wall Attachment

Joins main beam or cross tee to wall molding via locking barbs without pop rivets or screws ***(Fig 22)***.

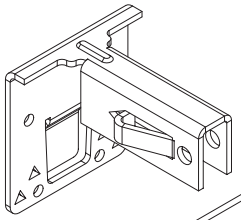

(Fig 22)

9.5 STAC – Single Tee Adapter Clip

Used to create code compliant non-seismic and seismic C, D, E, and F off-module main beam to cross tee connections. Refer to Single Tee Adapter Clip (STAC) installation guide for full instructions ***(Fig 23)***.

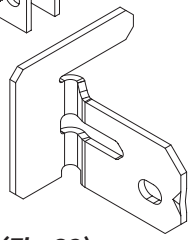

(Fig 23)

9.6 Stabilizer Bars

Used to maintain uniform spacing of suspension system components (main beams and cross tees) ***(Fig 24)***.

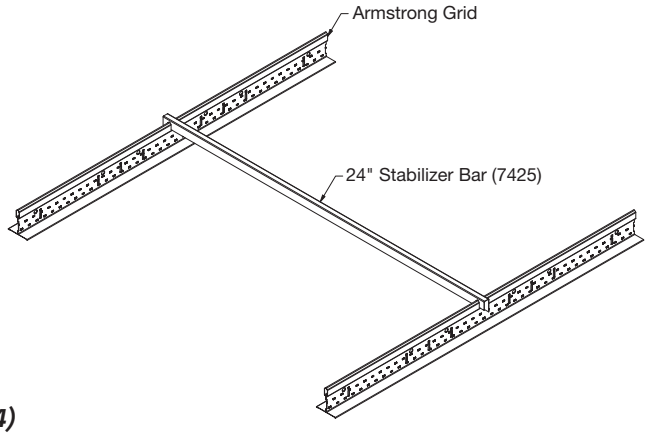

(Fig 24)

9.7 Stabilizer Clips

Used to maintain uniform spacing of grid components when Stabilizer Bars cannot be used due to lay-in panels. Refer to Large Format Ceiling Panels instructions for details ***(Fig 25)***.

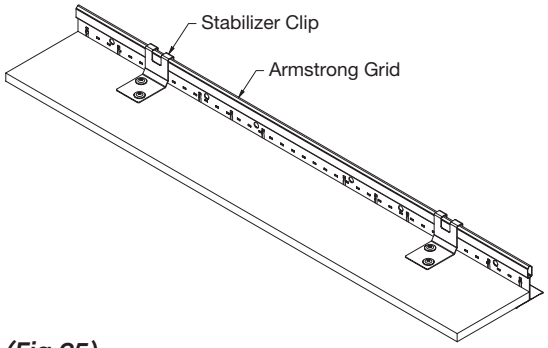

(Fig 25)

9.8 WS12 – Wire Splice

Used to splice a new hanger wire to an existing hanger wire, or if an extra-long hanger wire is needed ***(Fig 26)***.

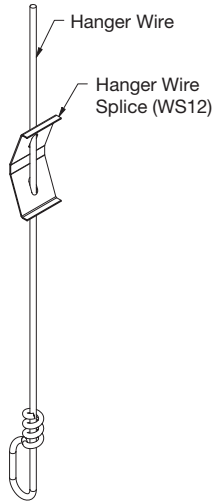

(Fig 26)

10. SEISMIC

10.1 Installations occurring in seismic design categories C, D, E, or F must be in compliance with the methods described in the Seismic Design: What You Need to Know document. This document outlines the Armstrong Seismic Rx methods for installing suspended ceilings in compliance with the International Building Code (IBC) requirements for seismic design categories C, D, E, and F.

10.2 Reference the product specific installation instructions of the product being installed for any seismic installation requirements.

MORE INFORMATION

For more information, or for an Armstrong Ceilings representative, call 1 877 276-7876.
For complete technical information, detail drawings, CAD design assistance, installation information, and many other technical services, call TechLine customer support at 1 877 276-7876 or FAX 1 800 572-TECH.

Armstrong®
World Industries

All trademarks used herein are the property of AWI Licensing LLC and/or its affiliates.
© 2024 AWI Licensing Company Printed in the United States of America

BPLA-293022-324