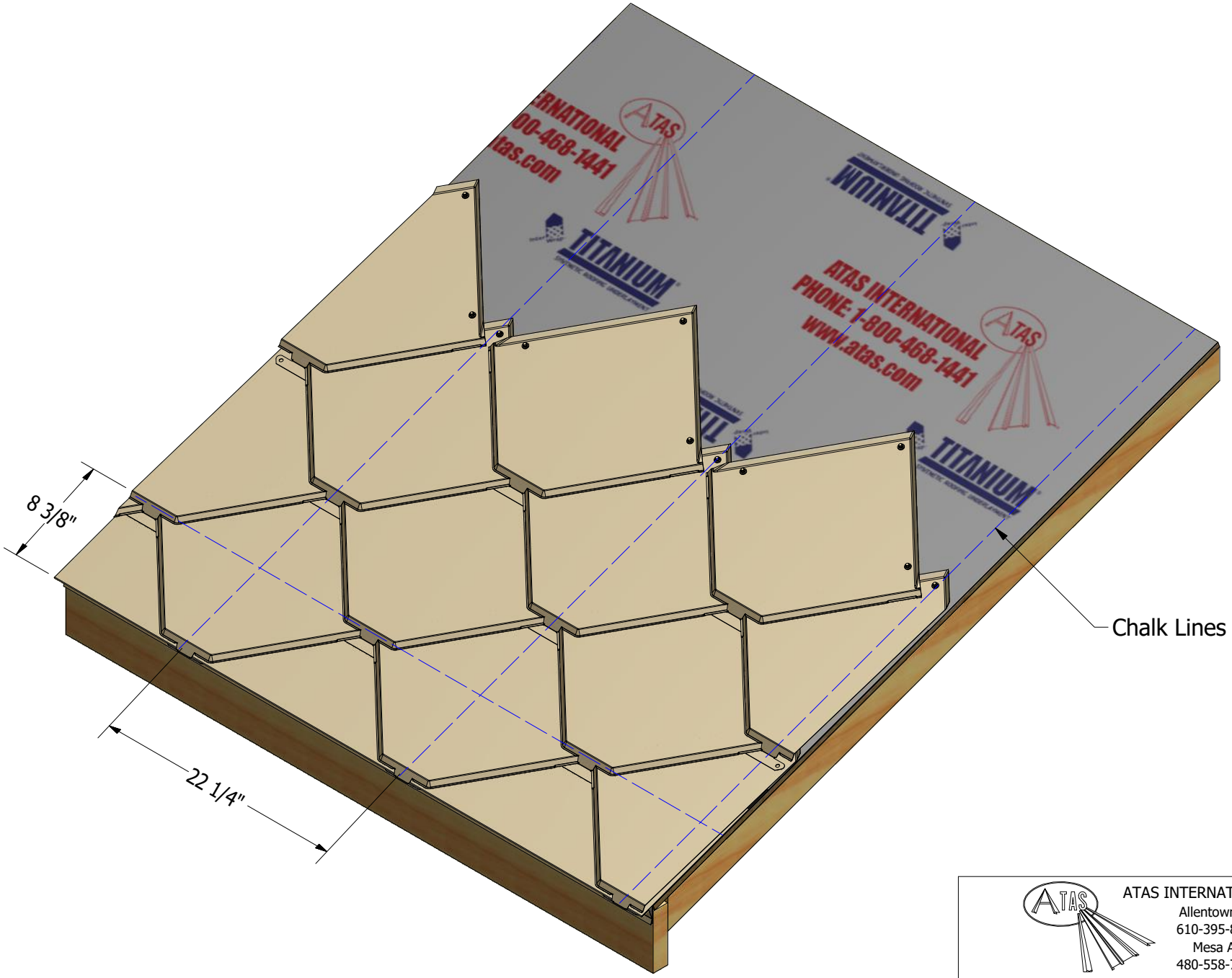

REV. NO.	DATE	DESCRIPTION OF REVISION	BY	APP

ATAS INTERNATIONAL, INC
Allentown PA
610-395-8445
Mesa AZ
480-558-7210

TITLE	CastleTop Chalk Line Detail		
DWG. NO.		DR KRK	DATE 6/7/2018
		APP	DATE
MATERIAL		SH. SIZE A	SCALE X:X

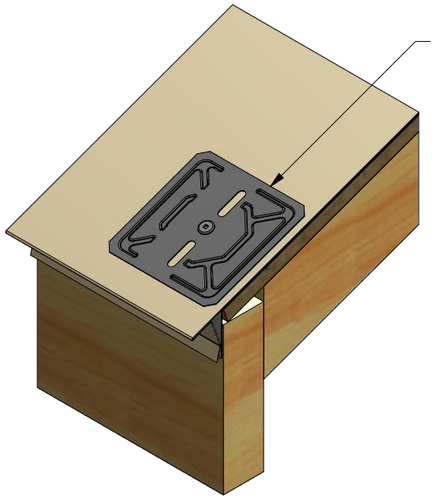

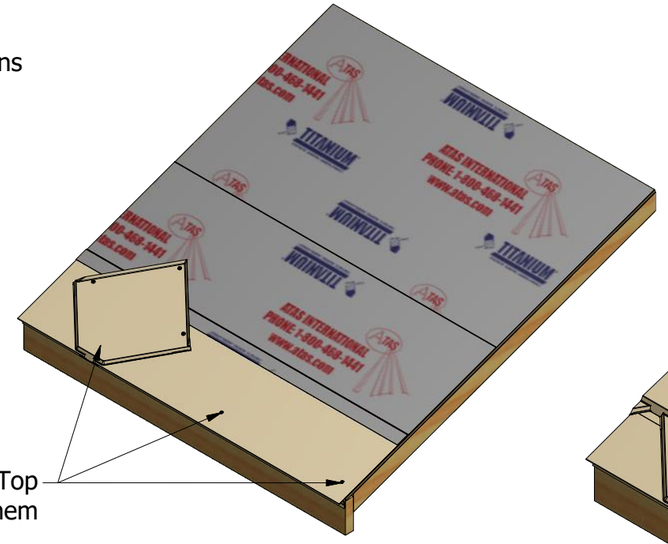

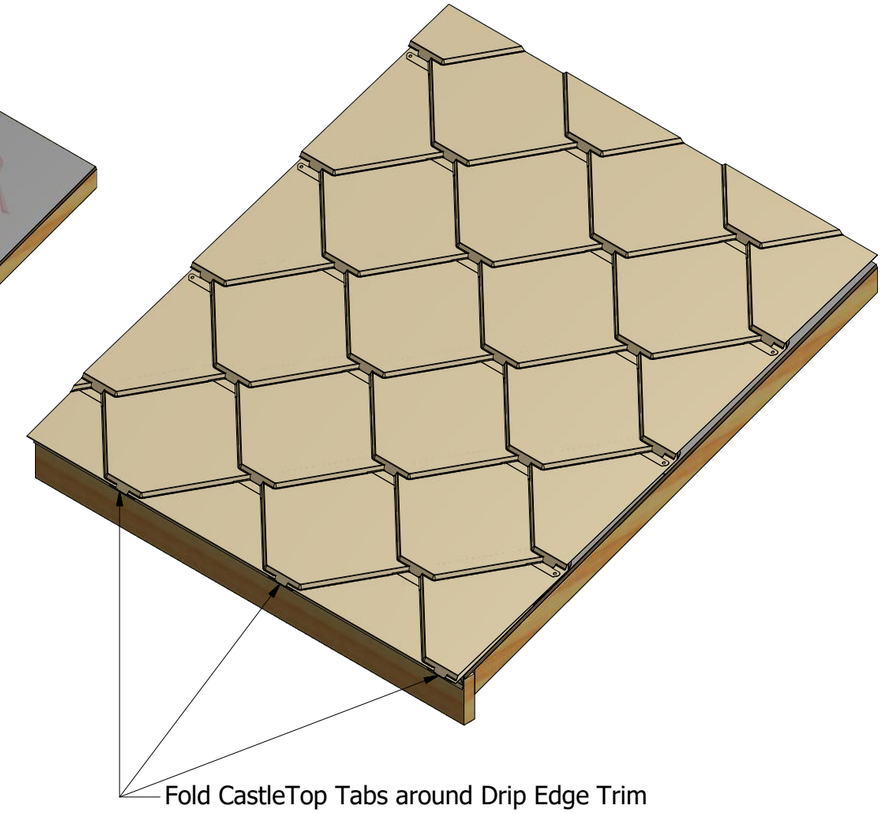

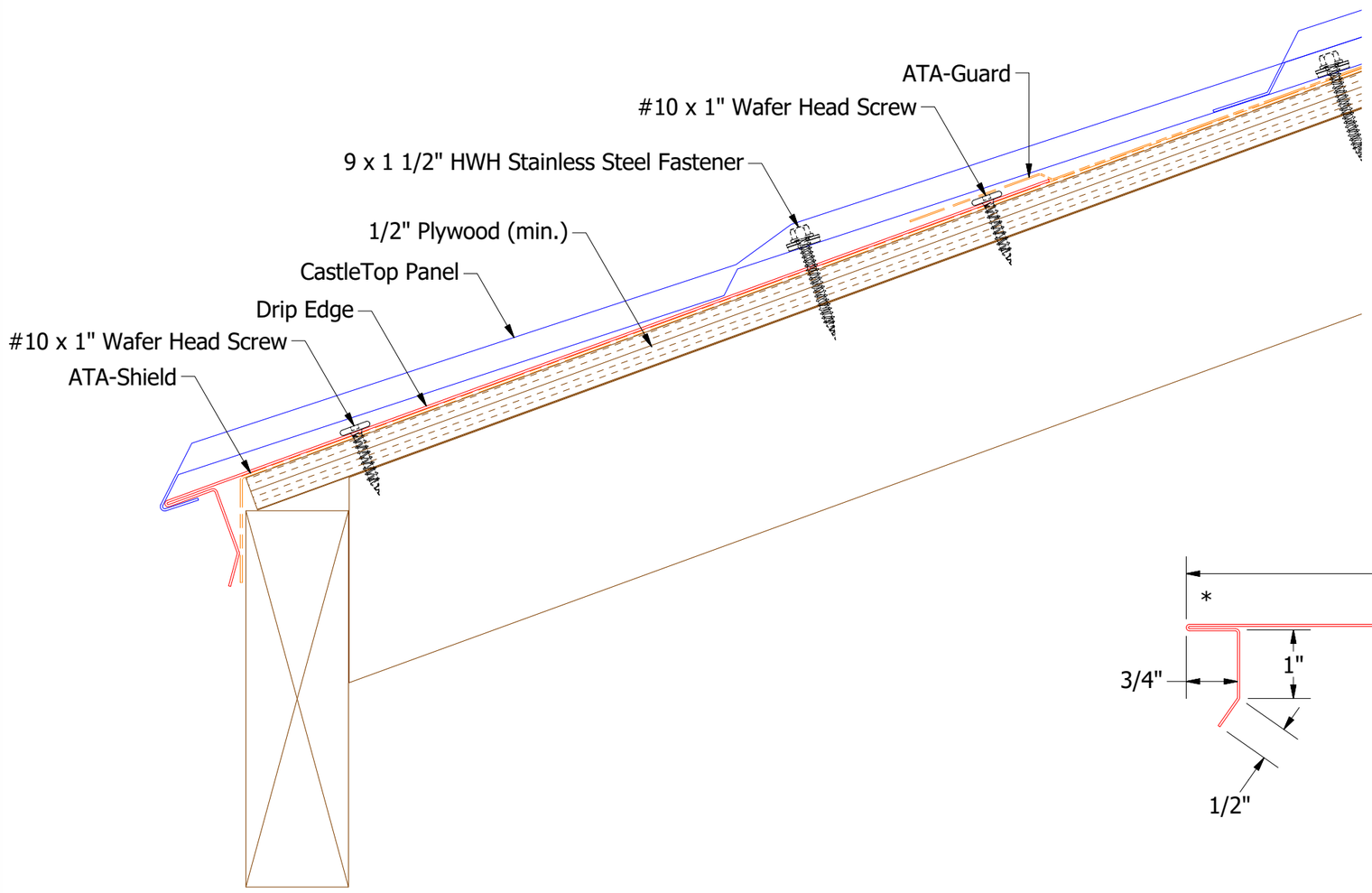

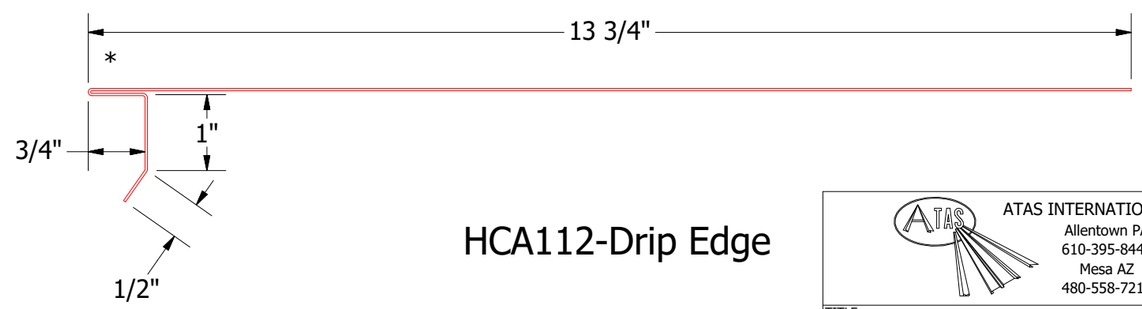

Note: * denotes color side.

HCA112-Drip Edge

ATAS INTERNATIONAL, INC
Allentown PA
610-395-8445
Mesa AZ
480-558-7210

TITLE: CastleTop Eave Detail

REV. NO.	DATE	DESCRIPTION OF REVISION	BY	APP
02	4/29/2021	Updated Panel Fastener to 9 x 1 1/2" HWH Stainless Steel Fastener	DMR	
01	5/17/2018	Updated Underlayment Installation Added Note for Bearing Plate and Drip Edge Fasteners	KRK	

DWG. NO.	DR KRK	DATE 11/20/2014	
MATERIAL	APP	DATE	
	SH. SIZE B	SCALE X:X	

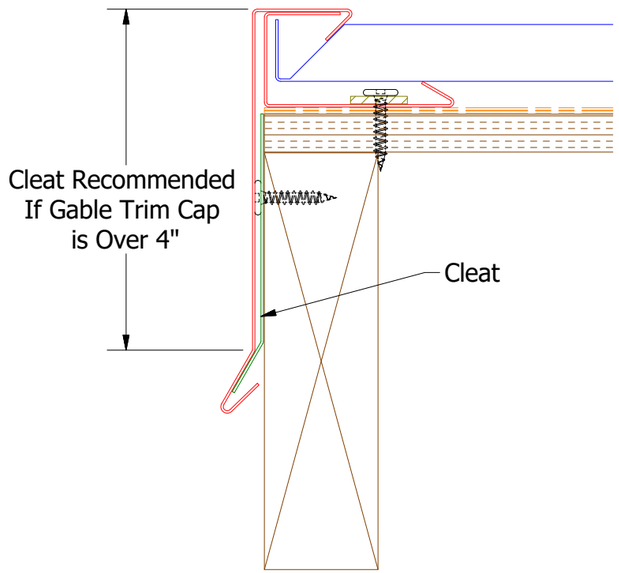

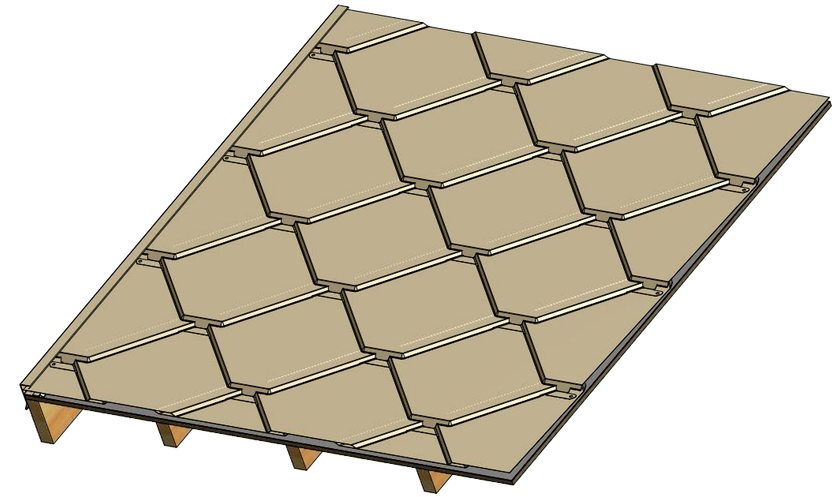

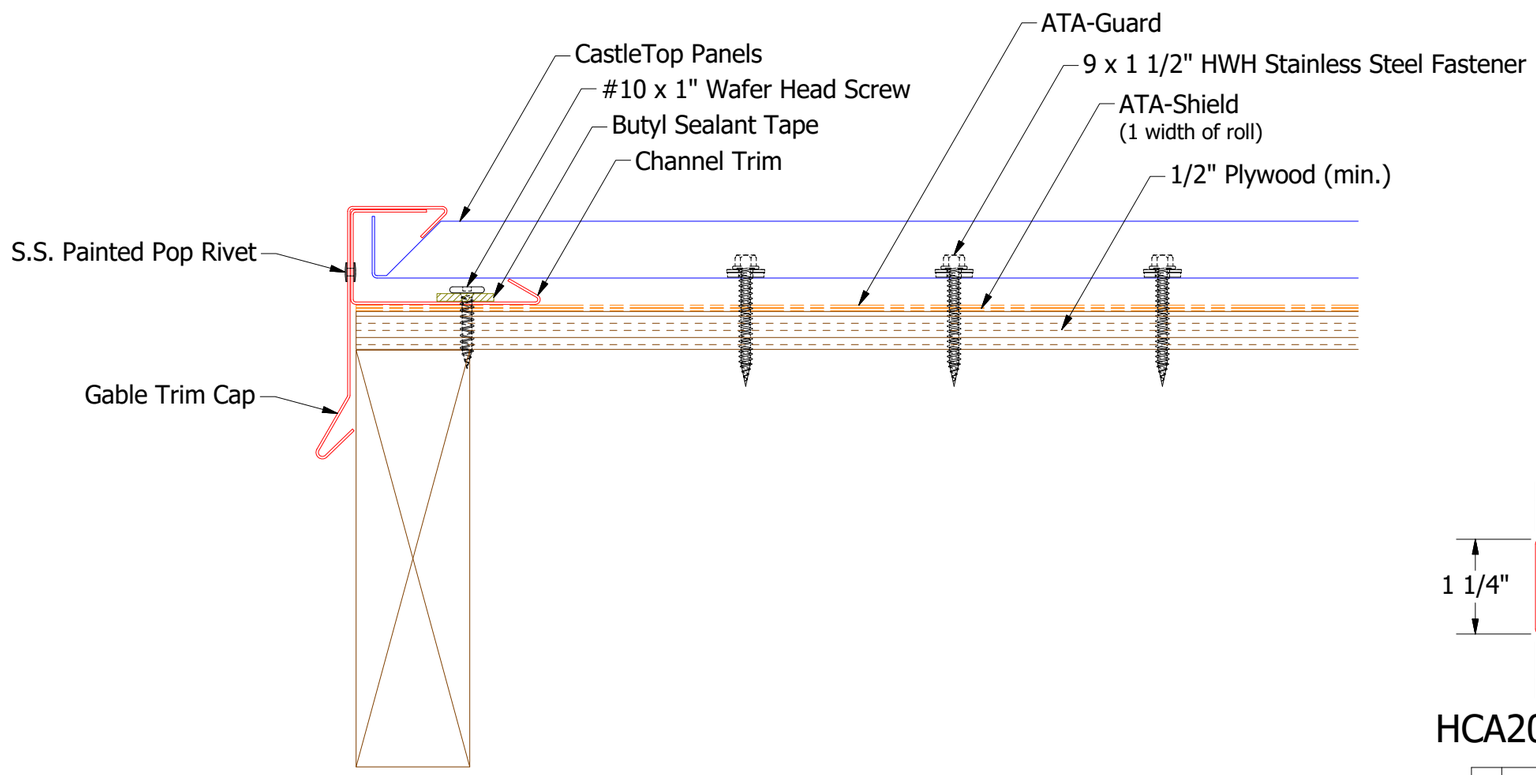

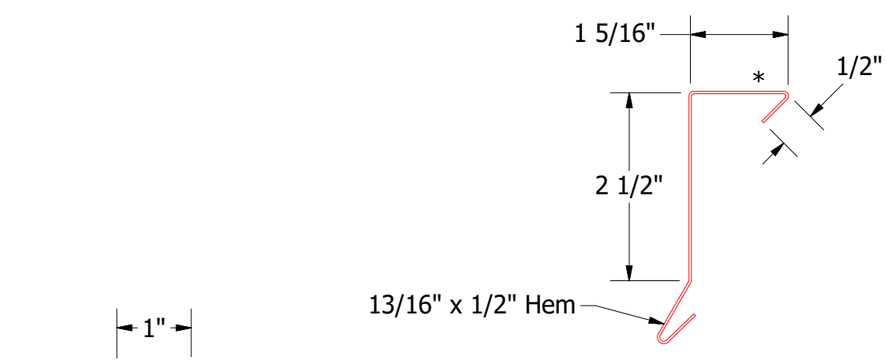

HCA201 - Gable Trim Cap

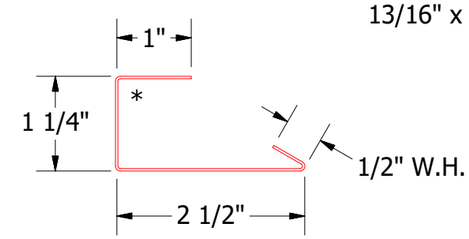

HCA200 - Channel Trim

Note: * denotes color side.

REV. NO.	DATE	DESCRIPTION OF REVISION	BY	APP
02	4/29/2021	Updated Panel Fastener to 9 x 1 1/2" HWH Stainless Steel Fastener	DMR	
01	5/16/2018	Updated Trim and Trim Installation	DMR	

ATAS INTERNATIONAL, INC
Allentown PA
610-395-8445
Mesa AZ
480-558-7210

TITLE: CastleTop Gable Detail

DWG. NO.

DR: KRK

DATE: 11/20/2014

APP

DATE

MATERIAL

SH. SIZE: B

SCALE: X:X

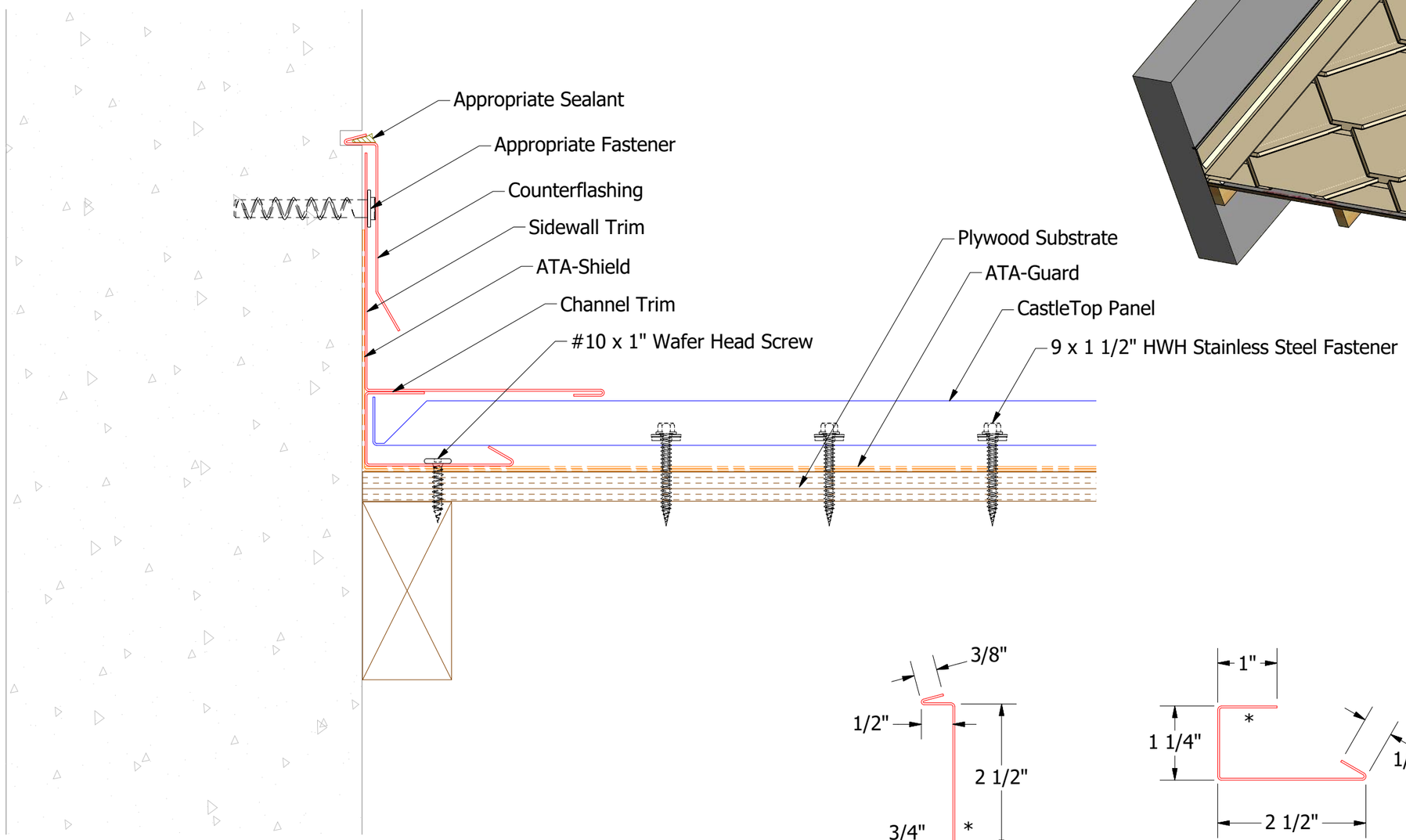

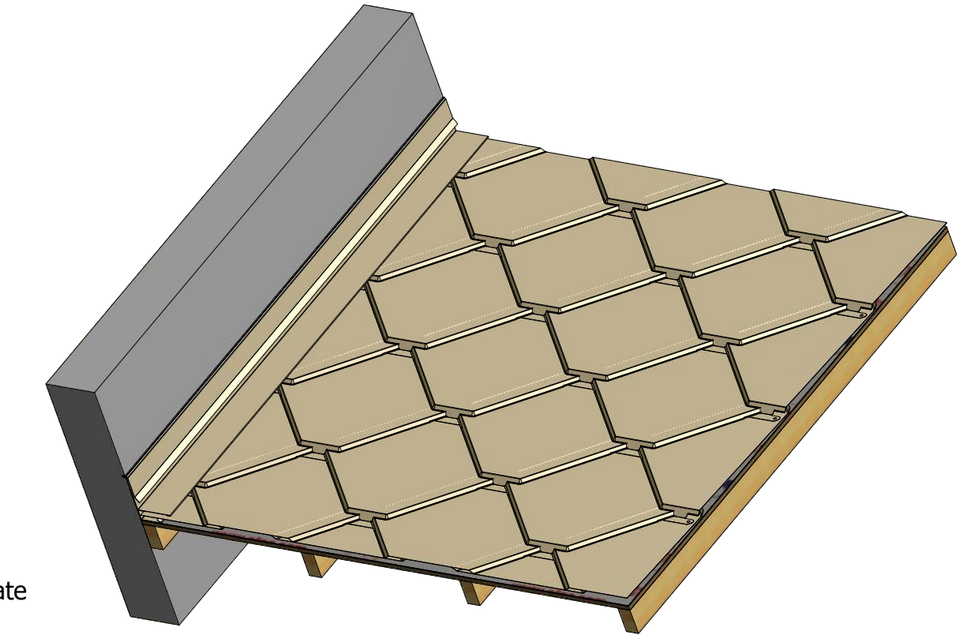

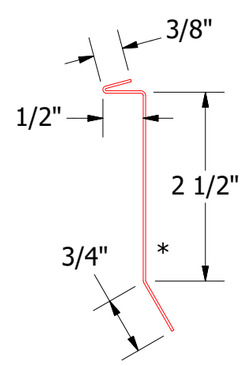

Counterflashing

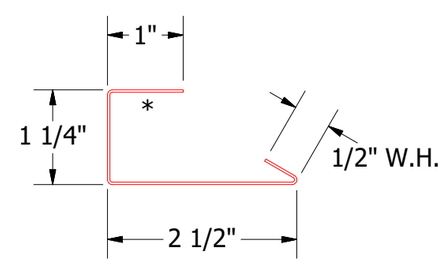

HCA200 - Channel Trim

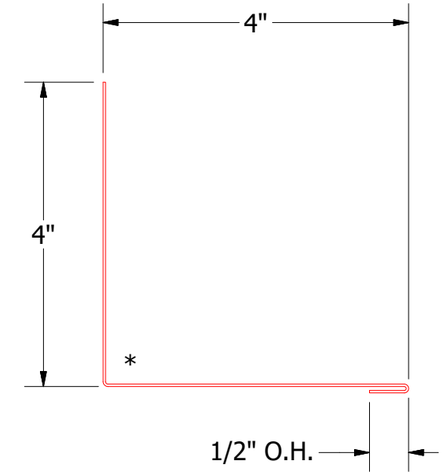

HCA410 - Sidewall Trim

Note: * denotes color side

REV. NO.	DATE	DESCRIPTION OF REVISION	BY	APP
03	11/11/2021	Removed Wall Panels, added Counterflashing	KRK	
02	4/29/2021	Updated Panel Fastener to 9 x 1 1/2" HWH Stainless Steel Fastener	DMR	
01	5/16/18	Updated Sidewall Substrate and Trim Install	DMR	

ATAS INTERNATIONAL, INC
Allentown PA
610-395-8445
Mesa AZ
480-558-7210

TITLE: CastleTop Sidewall Detail

DWG. NO.

MATERIAL

DR: KRK | DATE: 11/20/2014

APP | DATE

SH. SIZE: B | SCALE: X:X

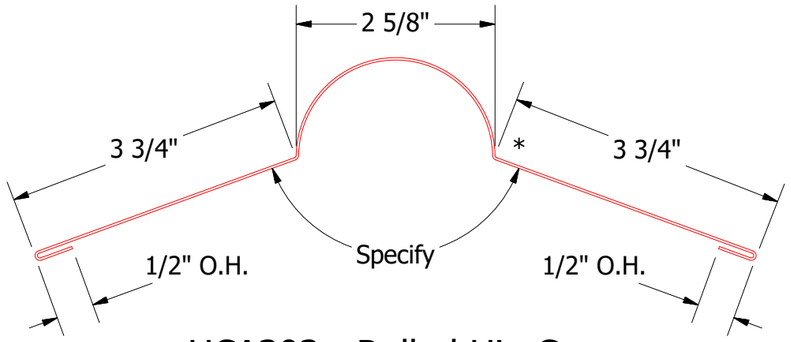

HCA303 - Rolled Hip Cap

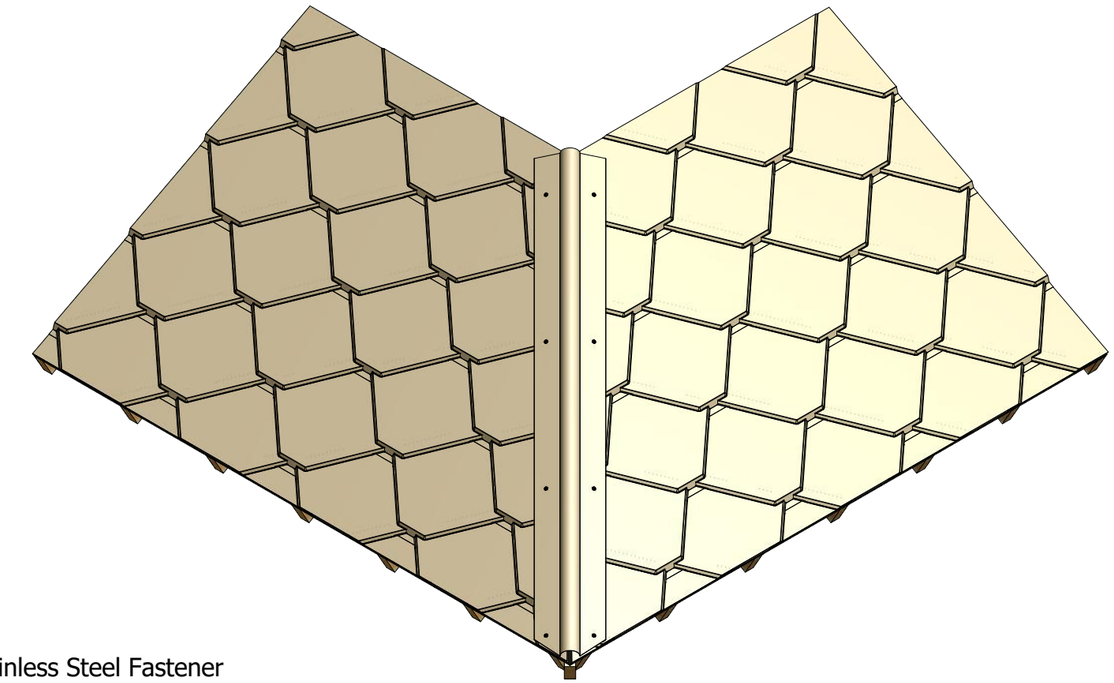

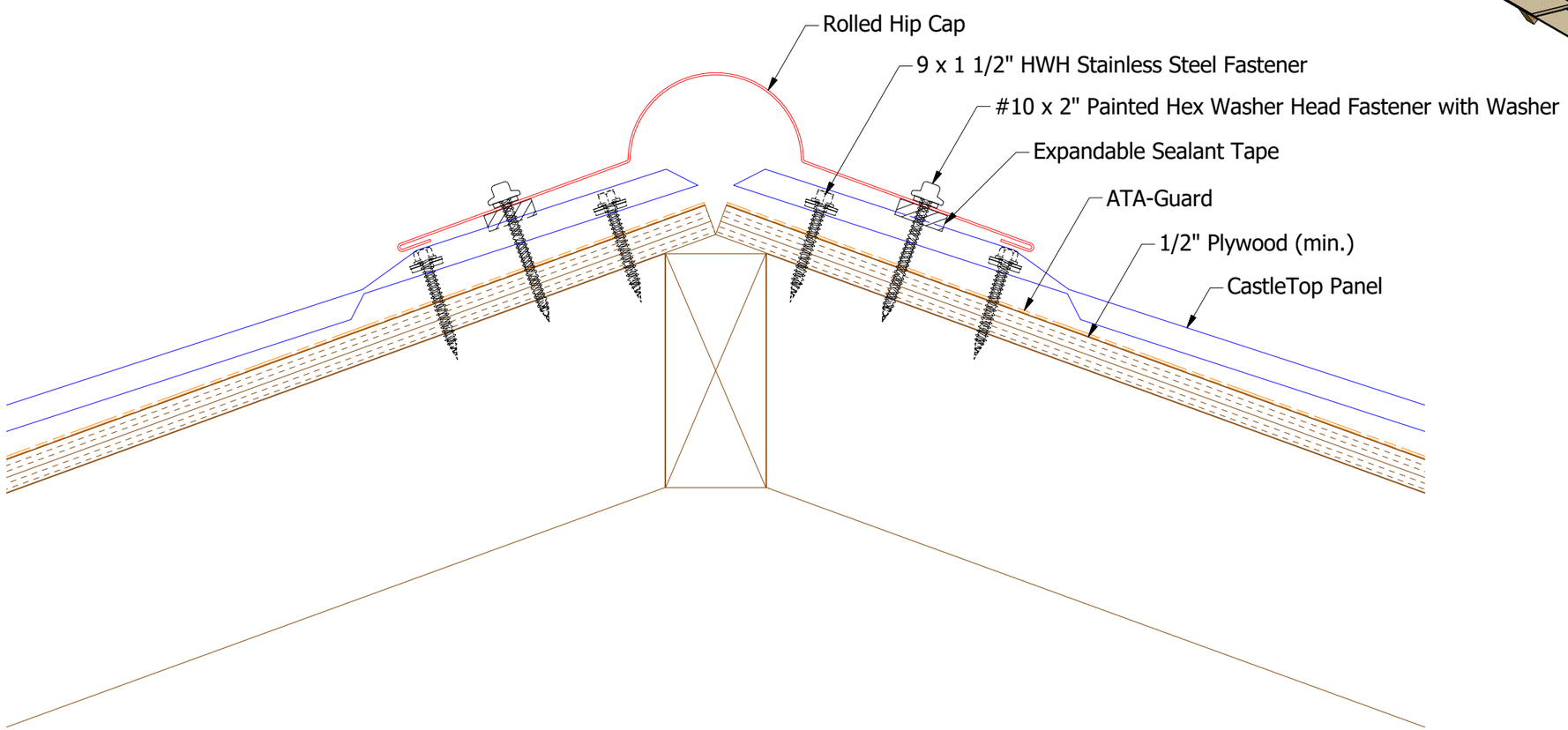

Note: * denotes color side

REV. NO.	DATE	DESCRIPTION OF REVISION	BY	APP
03	4/29/2021	Updated Panel Fastener to 9 x 1 1/2" HWH Stainless Steel Fastener	DMR	
02	4/24/2020	Updated Rolled Hip Trim to Specify the Angle	KRK	
01	4/23/2018	Updated Hip Substrate	DMR	

ATAS INTERNATIONAL, INC
Allentown PA
610-395-8445
Mesa AZ
480-558-7210

TITLE: CastleTop Hip Detail

DWG. NO.

DR: KRK

DATE: 11/20/2014

APP

DATE

MATERIAL

SH. SIZE: B

SCALE: X:X

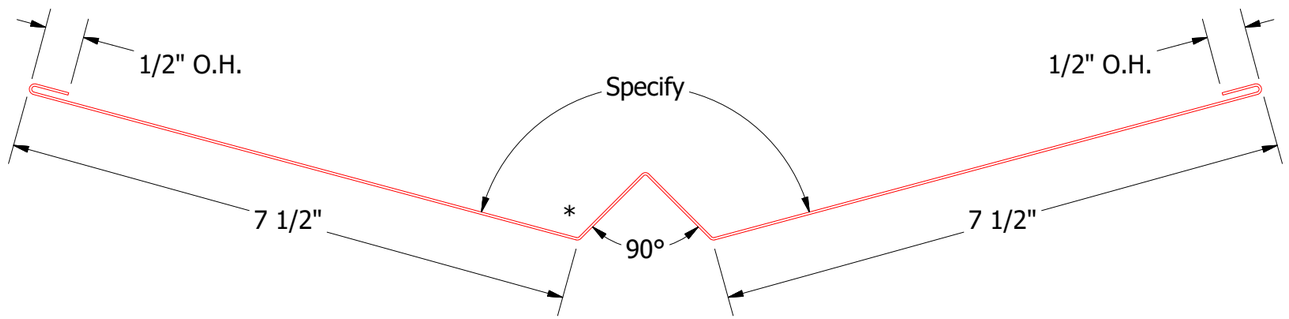

HCA800 - Valley Pan

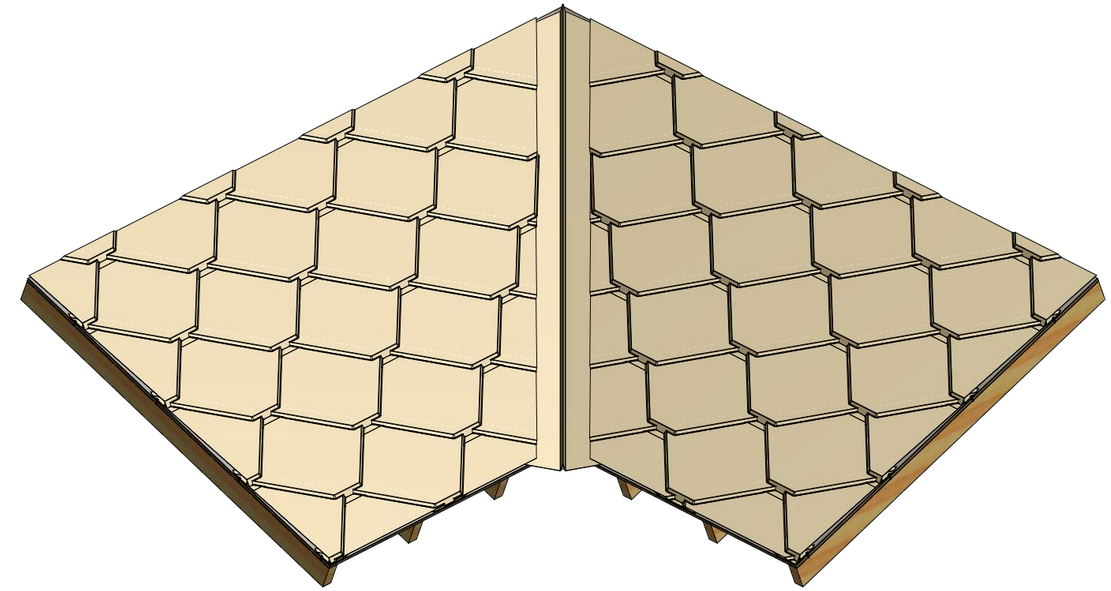

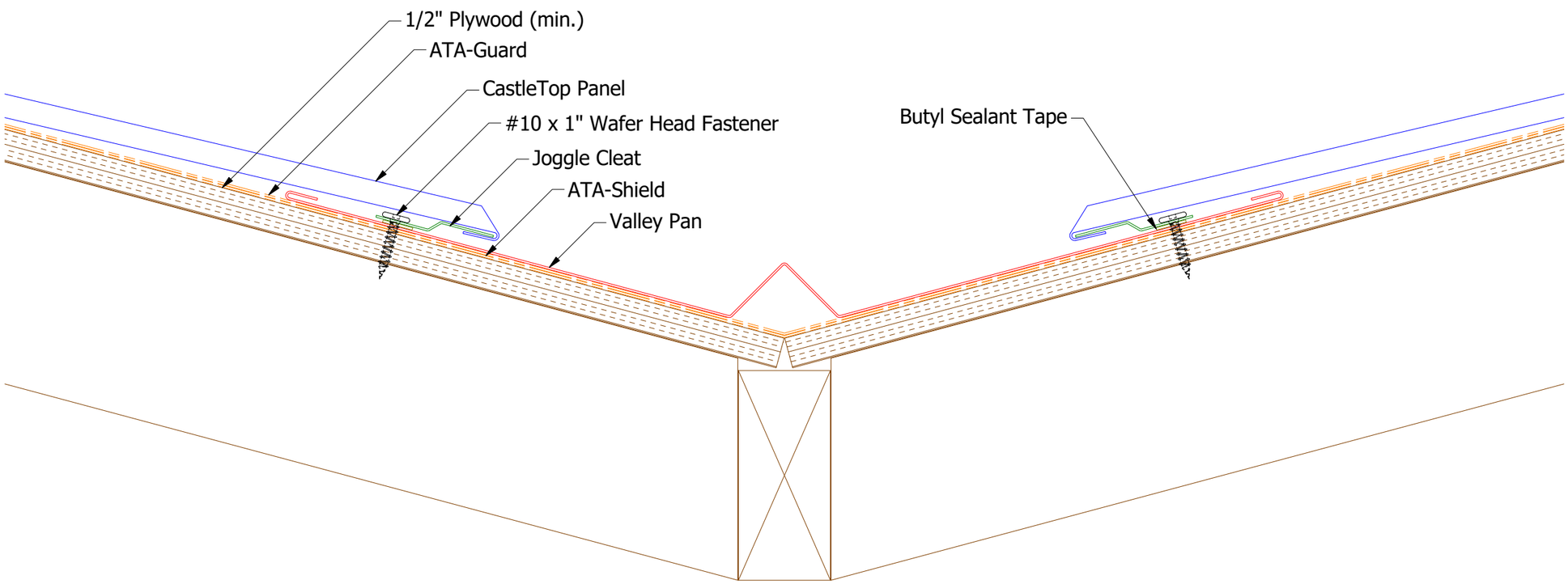

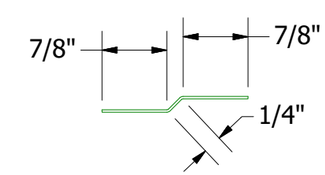

HCA975 - Joggle Cleat

Note: * denotes color side

REV. NO.	DATE	DESCRIPTION OF REVISION	BY	APP
01	4/23/2018	Updated Valley Pan	DMR	

ATAS INTERNATIONAL, INC
Allentown PA
610-395-8445
Mesa AZ
480-558-7210

TITLE: CastleTop Valley Detail

DWG. NO.

DR: KRK — DATE: 11/20/2014

APP — DATE

MATERIAL

SH. SIZE: B — SCALE: X:X

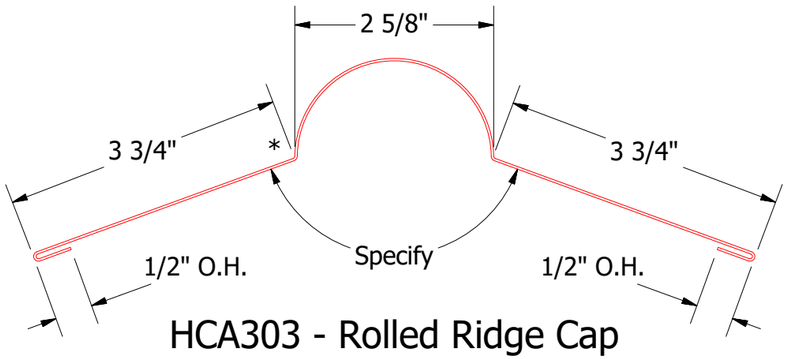

HCA303 - Rolled Ridge Cap

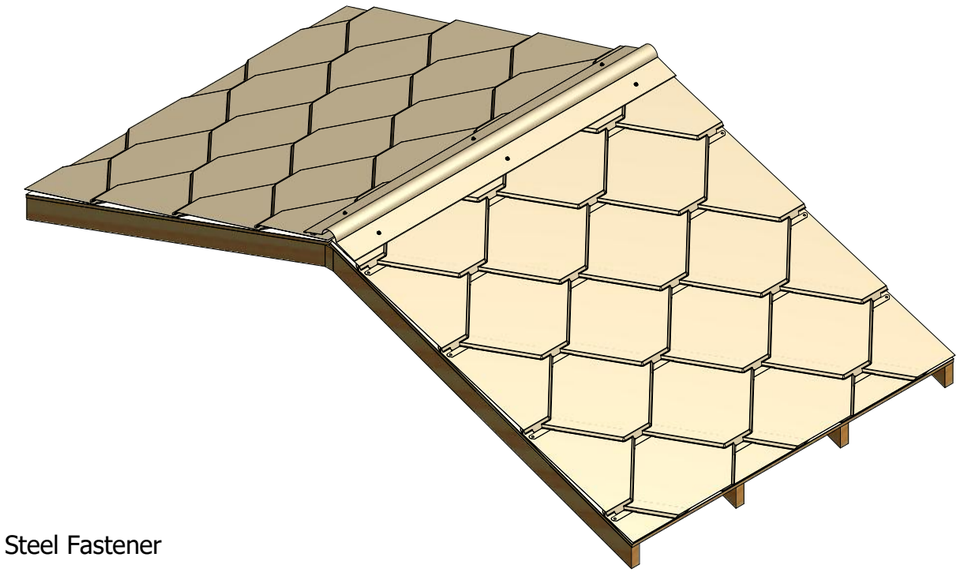

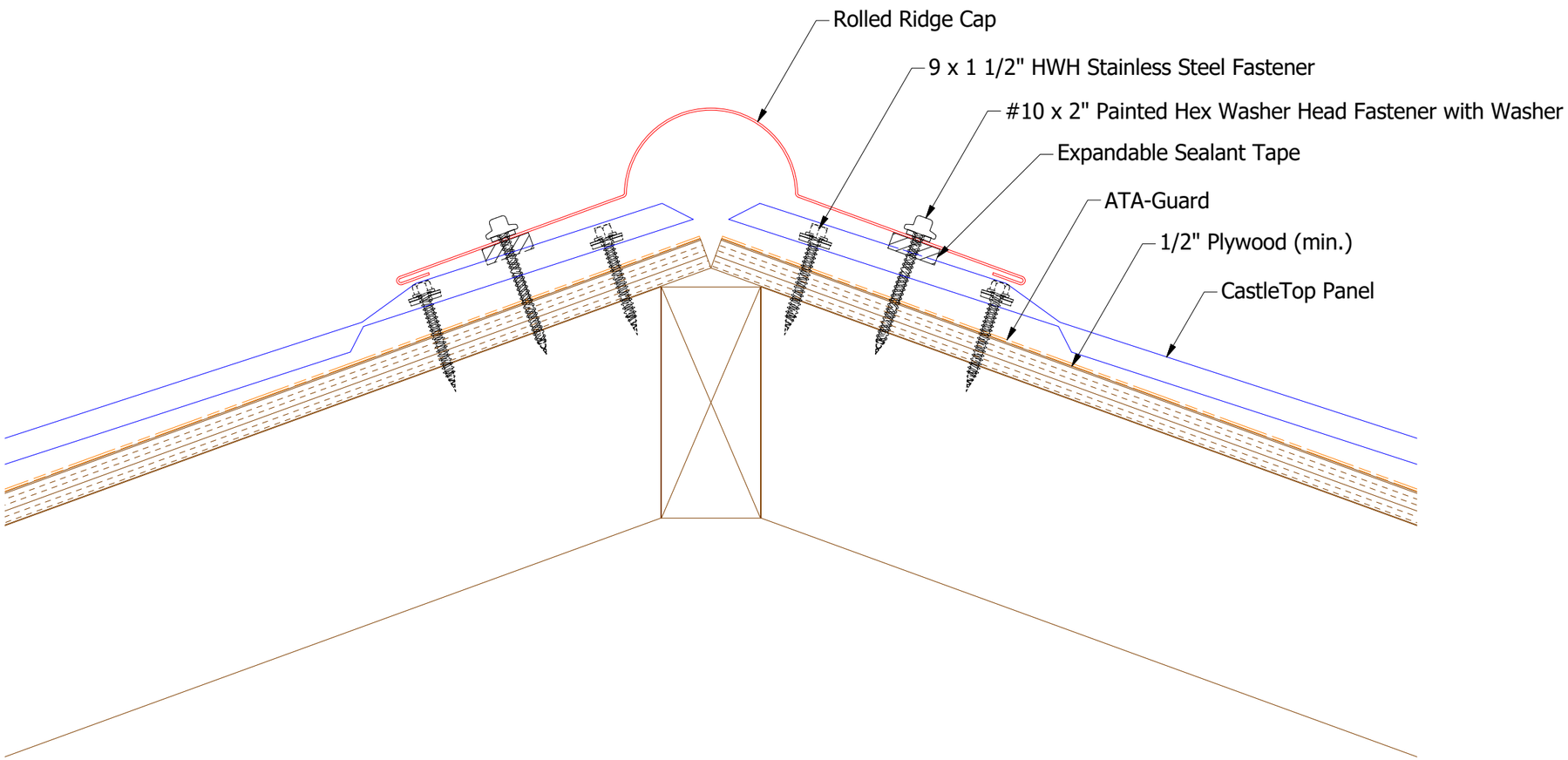

Note: * denotes color side

REV. NO.	DATE	DESCRIPTION OF REVISION	BY	APP
03	4/29/2021	Updated Panel Fastener to 9 x 1 1/2" HWH Stainless Steel Fastener	DMR	
02	4/24/2020	Updated Rolled Ridge Trim to Specify Angle	KRK	
01	4/23/2018	Updated Ridge Substrate	DMR	

ATAS INTERNATIONAL, INC
Allentown PA
610-395-8445
Mesa AZ
480-558-7210

TITLE: CastleTop Ridge Detail

DWG. NO.

MATERIAL

DR: KRK | DATE: 11/20/2014

APP | DATE

SH. SIZE: B | SCALE: X:X

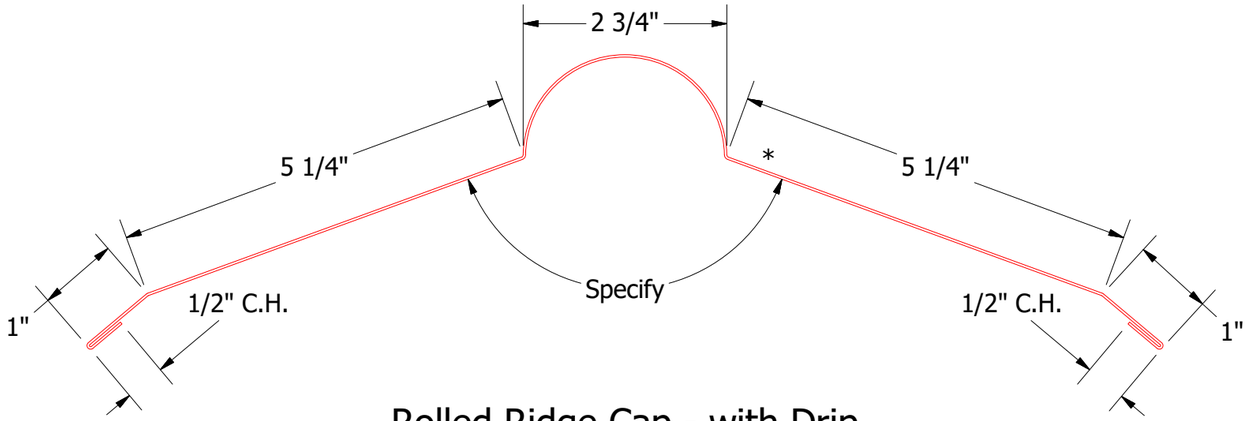

Rolled Ridge Cap - with Drip

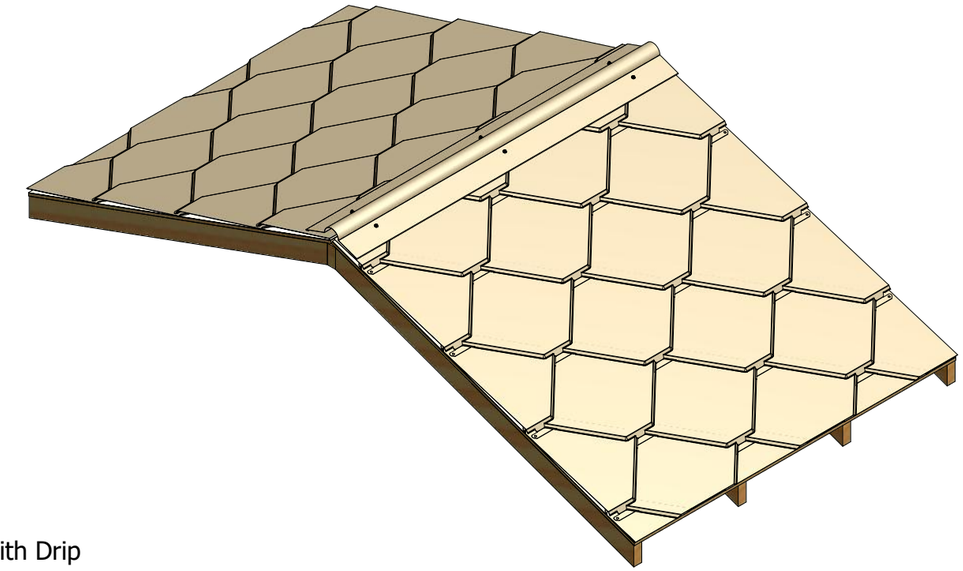

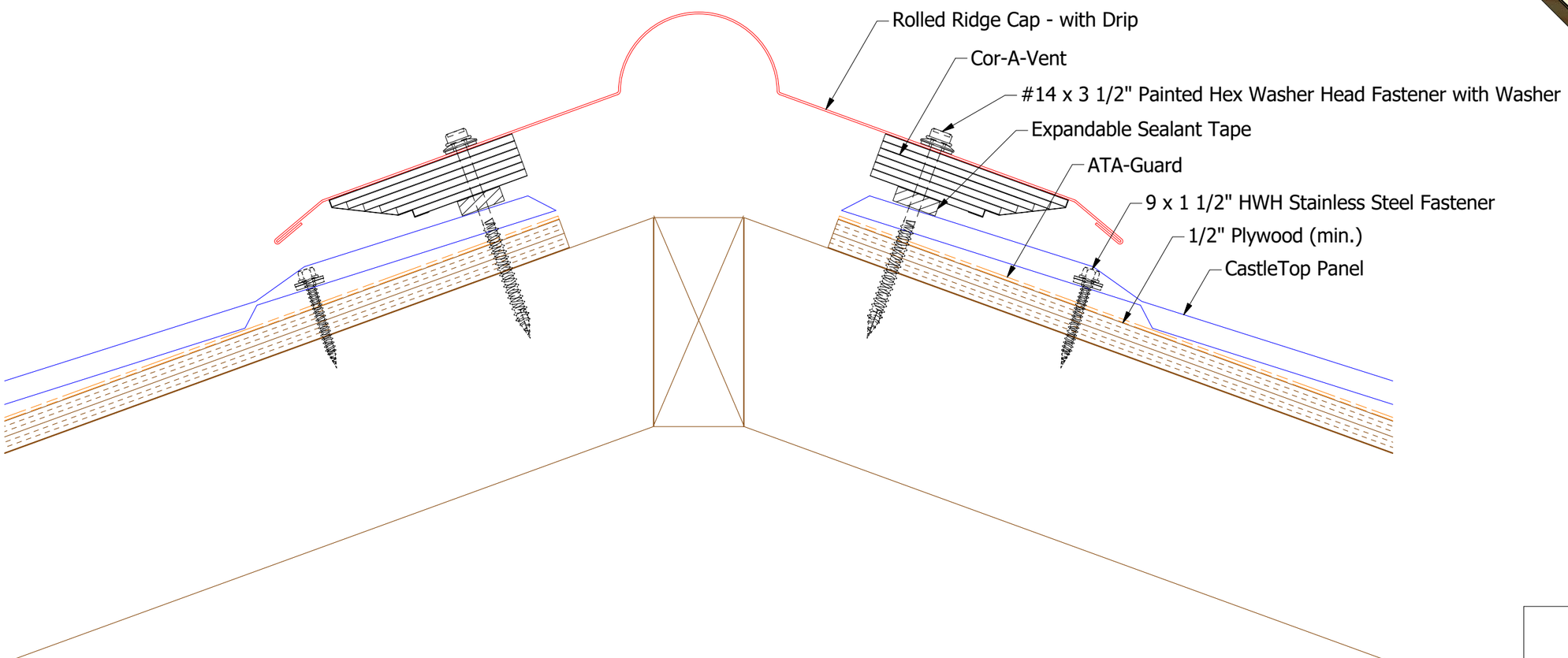

Note: * denotes color side

REV. NO.	DATE	DESCRIPTION OF REVISION	BY	APP
03	5/4/2021	Updated Panel Fastener to 9 x 1 1/2" HWH Stainless Steel Fastener	DMR	
02	4/24/2020	Updated Rolled Ridge with Drip Trim to Specify Angle	KRK	
01	4/23/2018	Updated Vented Ridge Substrate	DMR	

ATAS INTERNATIONAL, INC
Allentown PA
610-395-8445
Mesa AZ
480-558-7210

TITLE: CastleTop Vented Ridge Detail

DWG. NO.

MATERIAL

DR: KRK | DATE: 11/20/2014

APP | DATE

SH. SIZE: B | SCALE: X:X

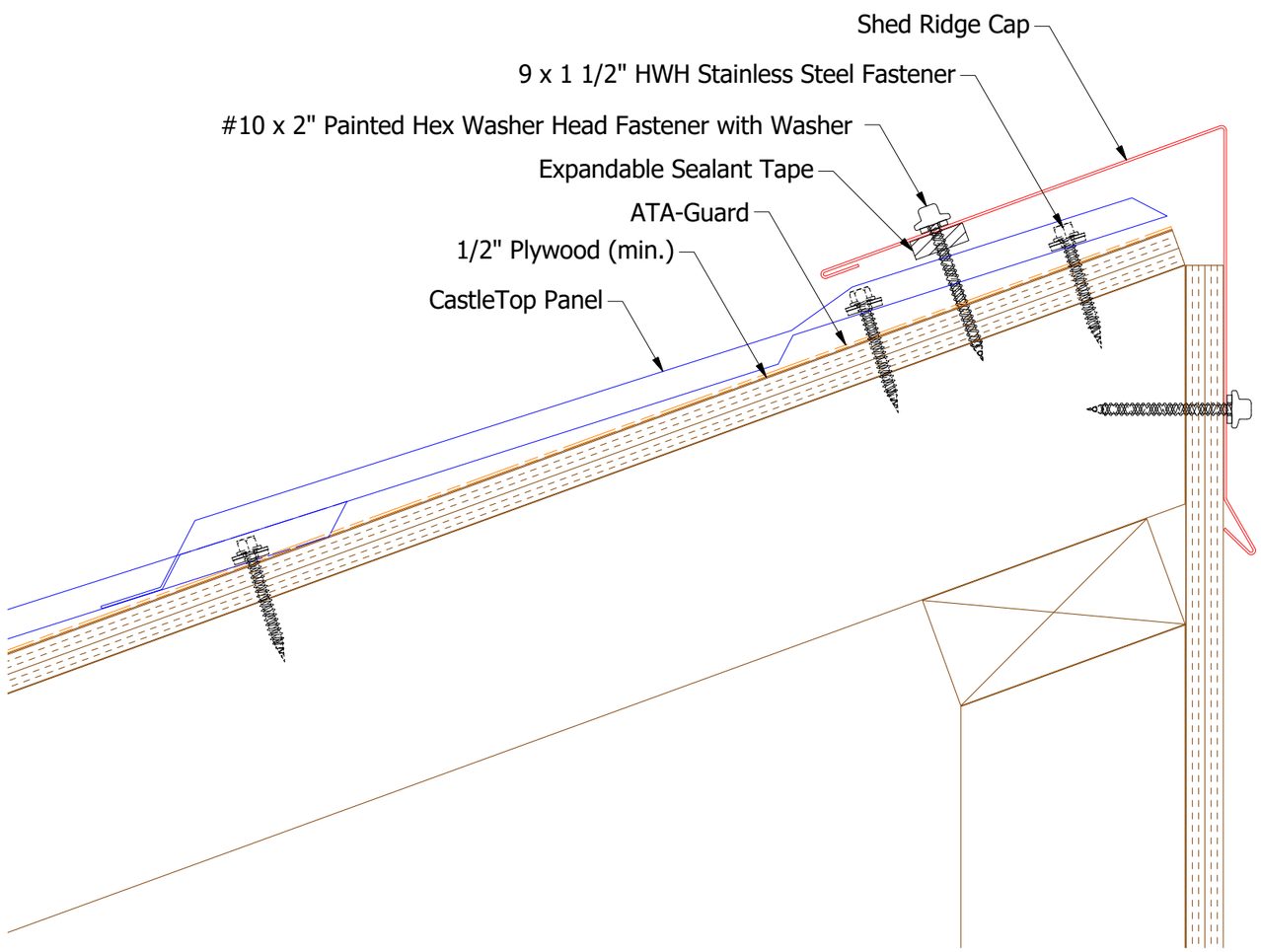

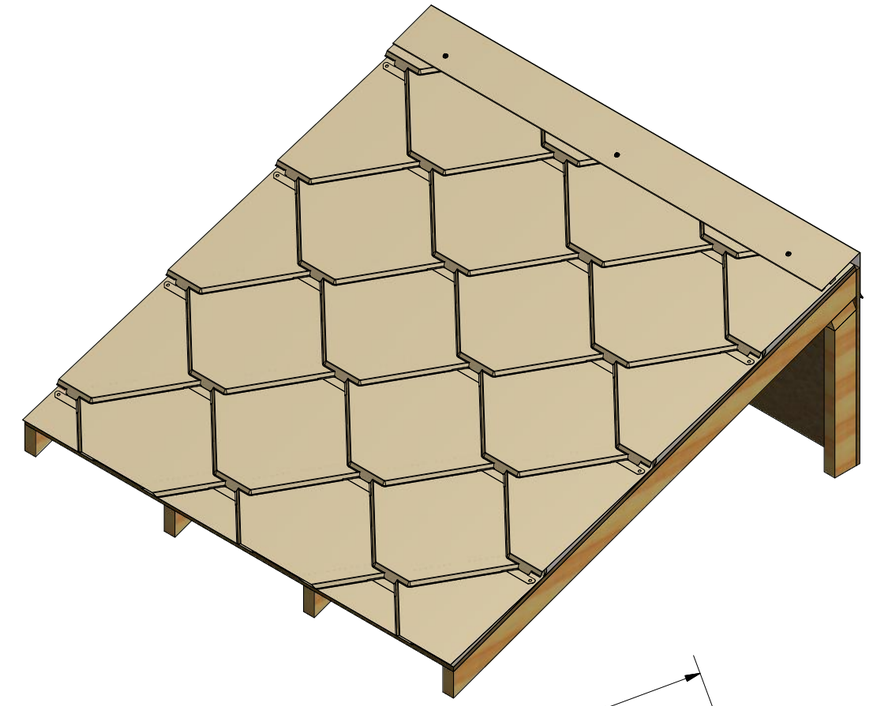

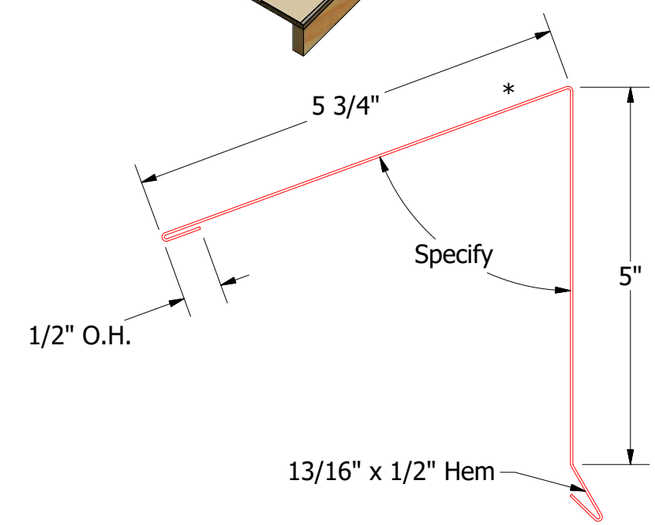

HCA342 - Shed Ridge Cap

Note: * denotes color side

REV. NO.	DATE	DESCRIPTION OF REVISION	BY	APP
02	4/29/2021	Updated Panel Fastener to 9 x 1 1/2" HWH Stainless Steel Fastener	DMR	
01	4/23/2018	Updated Shed Ridge Substrate	DMR	

ATAS INTERNATIONAL, INC
Allentown PA
610-395-8445
Mesa AZ
480-558-7210

TITLE: CastleTop Shed Ridge Detail

DWG. NO.

MATERIAL

DR: KRK | DATE: 11/20/2014

APP | DATE

SH. SIZE: B | SCALE: X:X

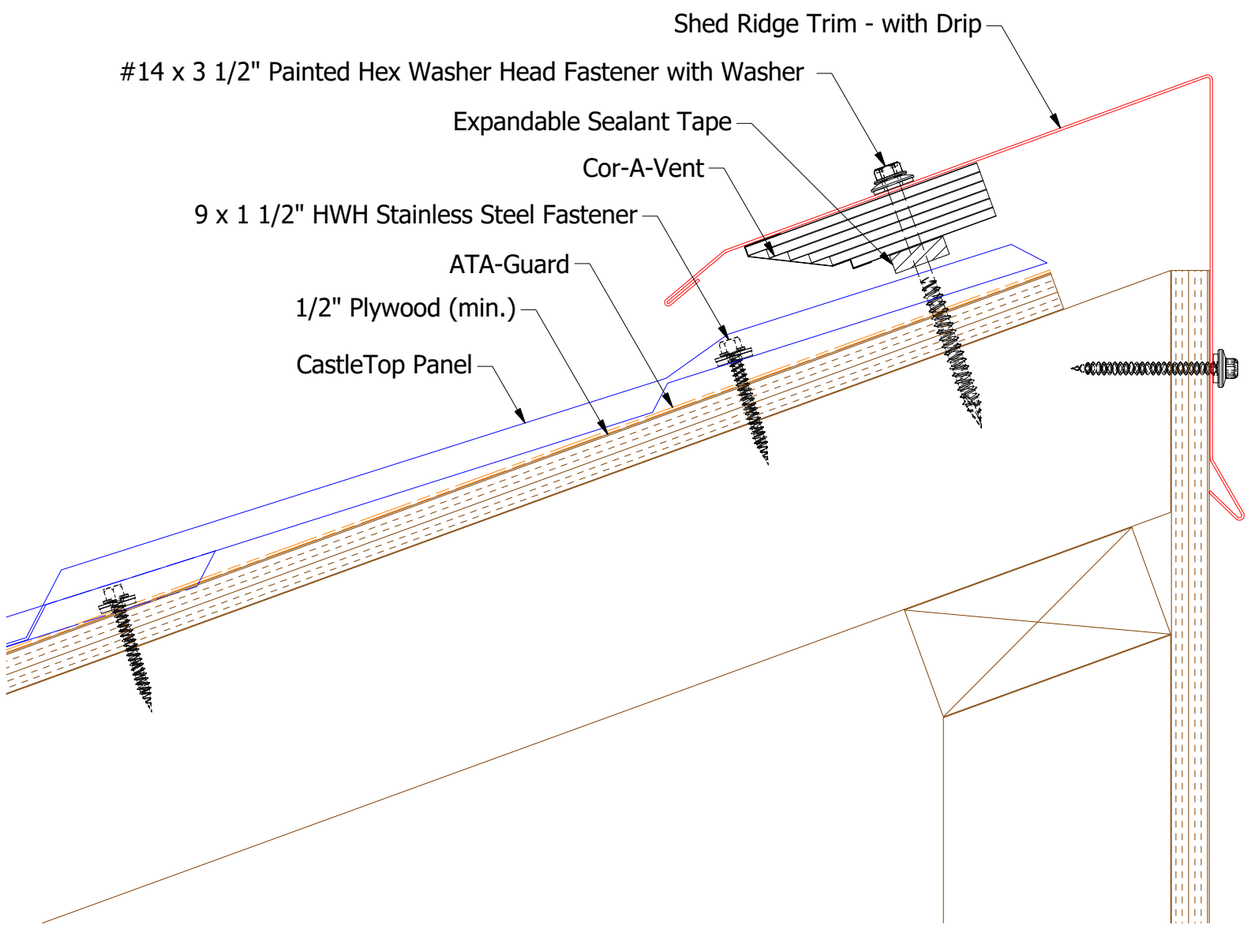

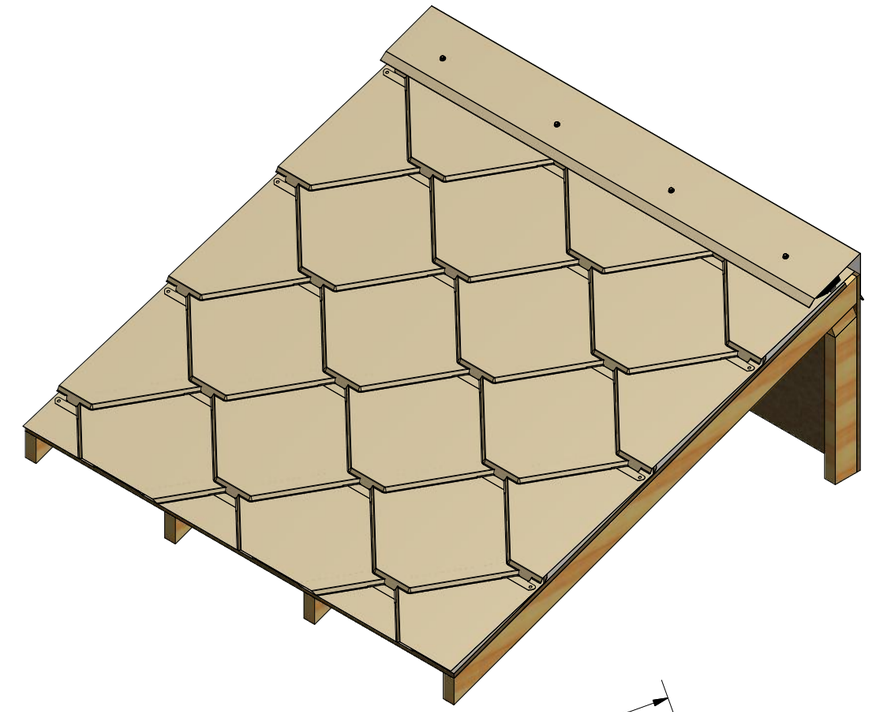

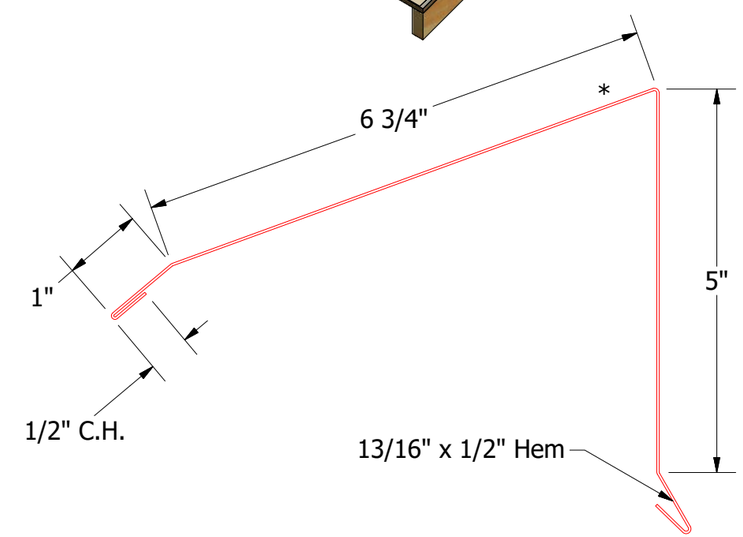

Shed Ridge Trim - with Drip

Note: * denotes color side

REV. NO.	DATE	DESCRIPTION OF REVISION	BY	APP
02	5/4/2021	Updated Panel Fastener to 9 x 1 1/2" HWH Stainless Steel Fastener	DMR	
01	4/23/2018	Updated Vented Shed Ridge Trim	DMR	

ATAS INTERNATIONAL, INC
Allentown PA
610-395-8445
Mesa AZ
480-558-7210

TITLE: CastleTop Vented Shed Ridge Detail

DWG. NO.	DR KRK	DATE 11/20/2014	
	APP	DATE	
MATERIAL	SH. SIZE B	SCALE X:X	

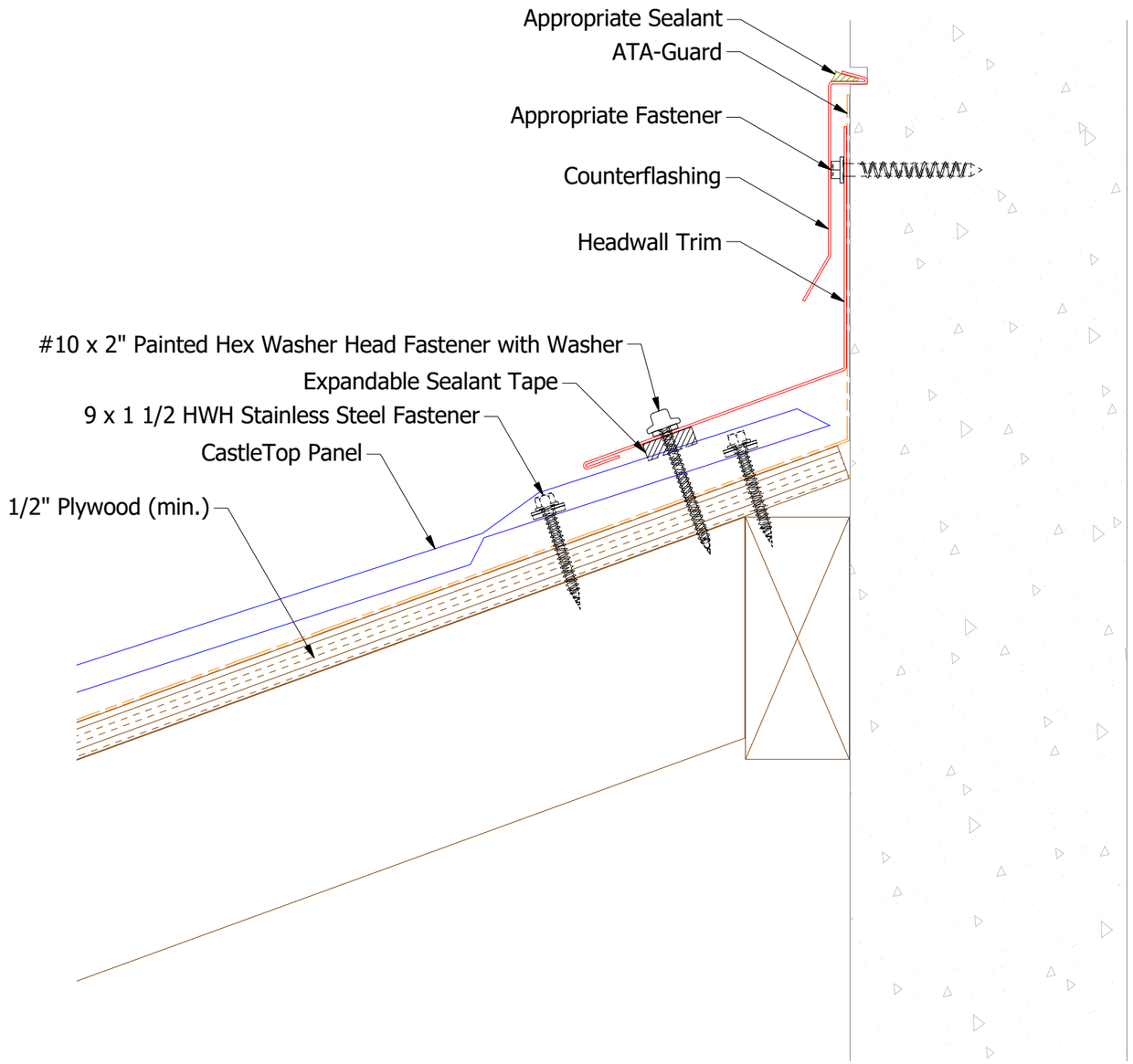

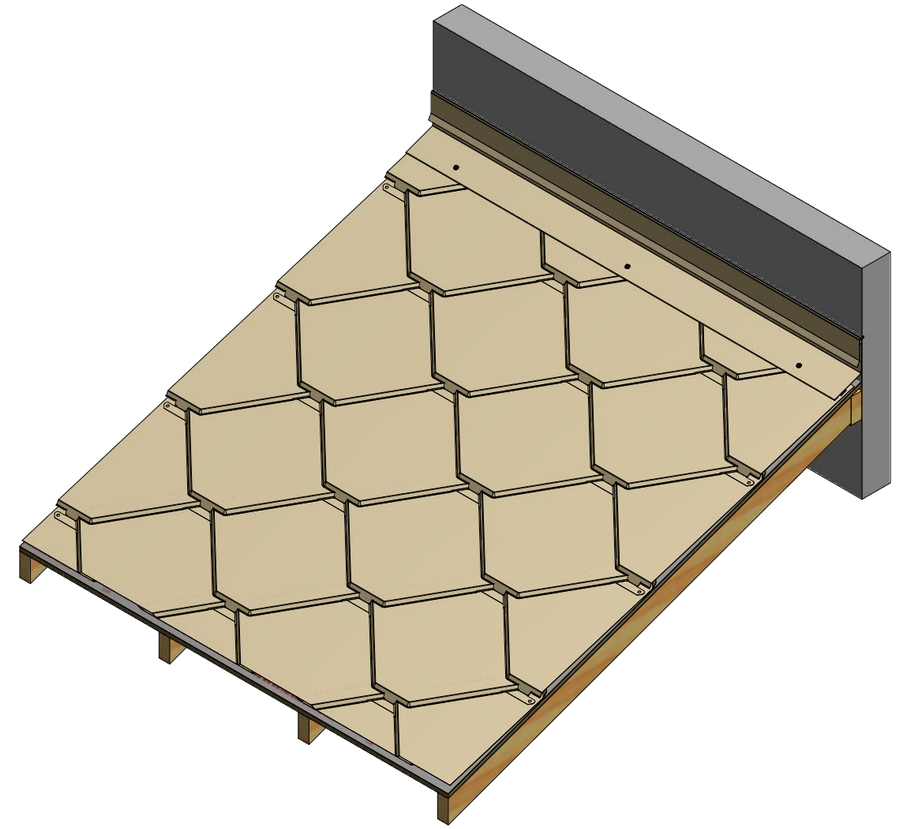

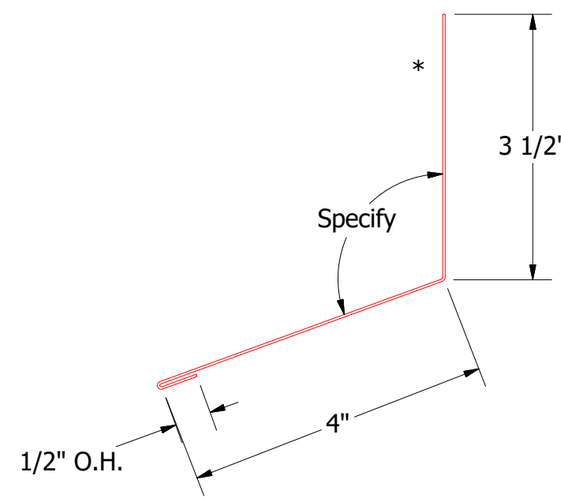

HCA500 - Headwall Trim

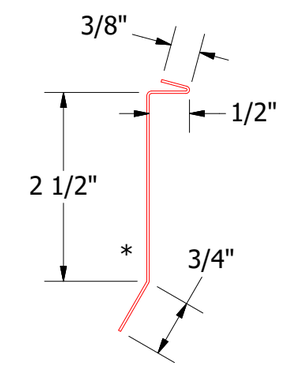

Counterflashing

Note: * denotes color side.

REV. NO.	DATE	DESCRIPTION OF REVISION	BY	APP
03	11/10/2021	Changed Wall Panel to Counterflashing	KRK	
02	4/29/2021	Updated Panel Fastener to 9 x 1 1/2" HWH Stainless Steel Fastener	DMR	
01	4/13/2018	Formatting Updates	KRK	

ATAS INTERNATIONAL, INC
Allentown PA
610-395-8445
Mesa AZ
480-558-7210

TITLE: CastleTop Headwall Detail

DWG. NO.

DR: KRK | DATE: 11/21/2014

APP | DATE

MATERIAL

SH. SIZE: B | SCALE: X:X

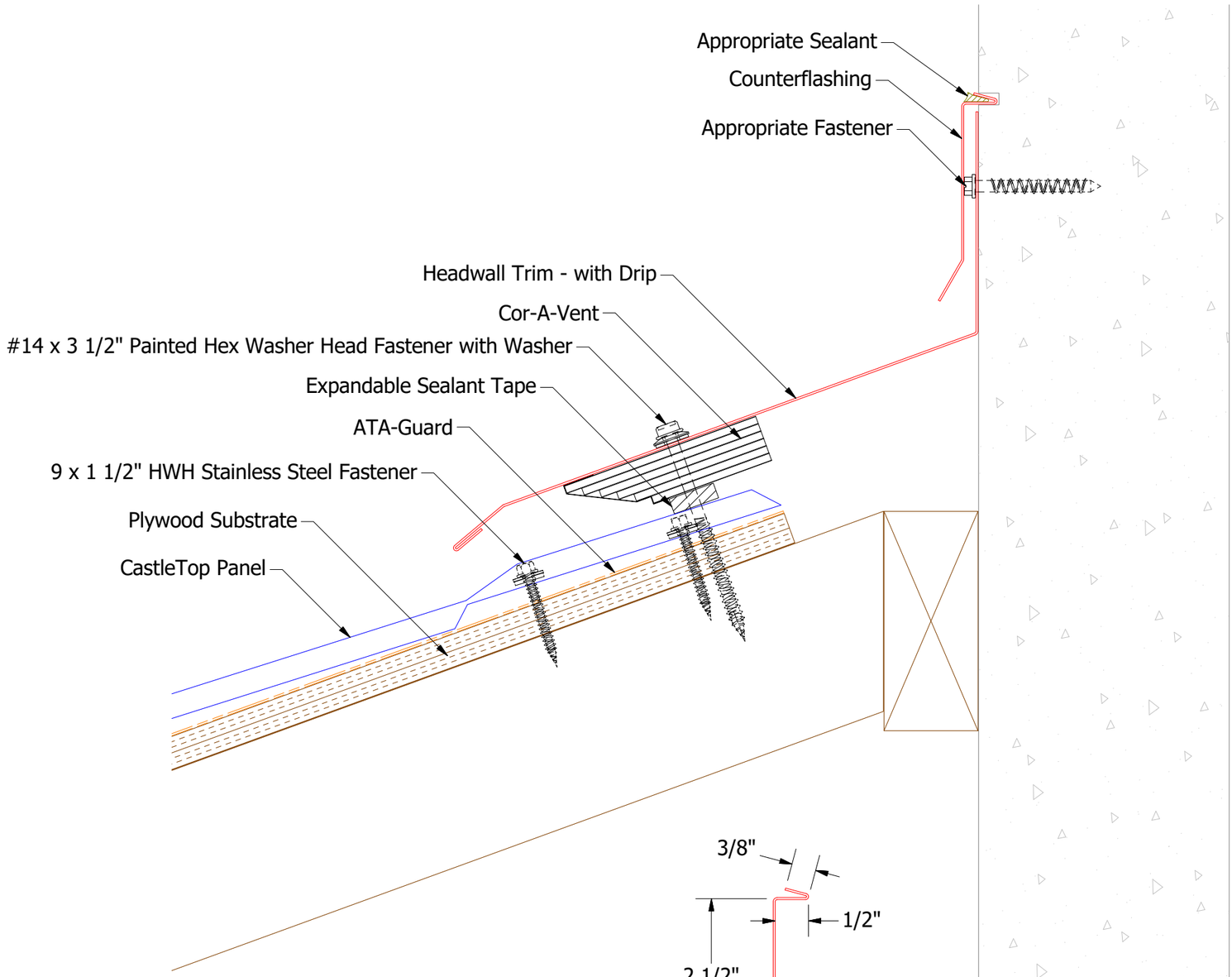

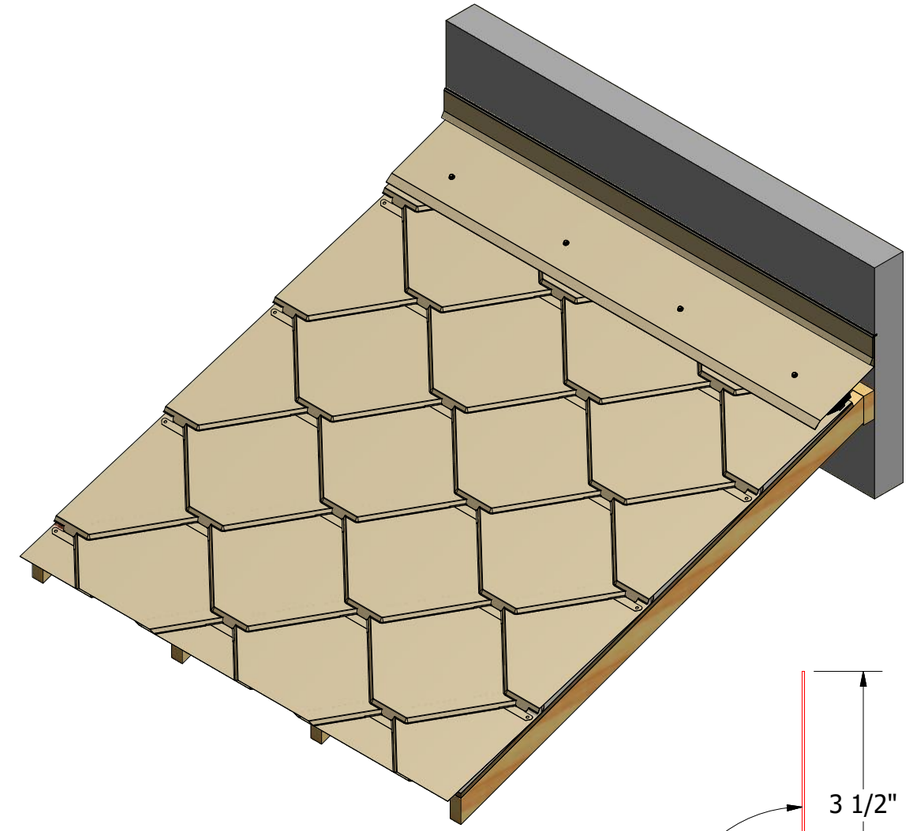

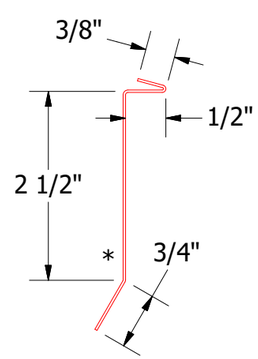

Counterflashing

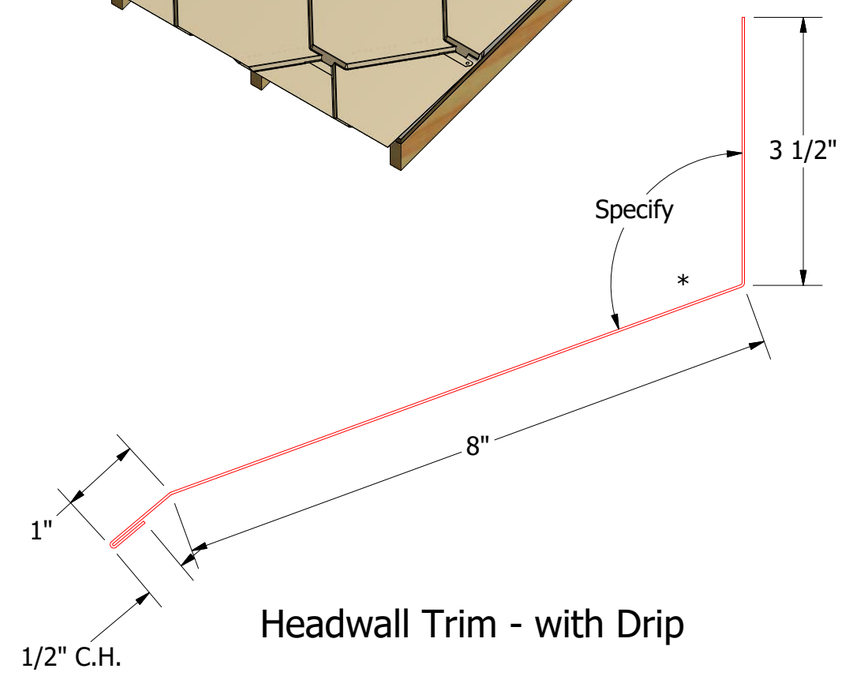

Headwall Trim - with Drip

Note: * denotes color side

ATAS INTERNATIONAL, INC
Allentown PA
610-395-8445
Mesa AZ
480-558-7210

REV. NO.	DATE	DESCRIPTION OF REVISION	BY	APP
03	11/11/2021	Removed Wall Panels, added Counterflashing	KRK	
02	5/4/2021	Updated Panel Fastener to 9 x 1 1/2" HWH Stainless Steel Fastener	DMR	
01	4/23/2018	Updated Vented Headwall Substrate	DMR	

TITLE CastleTop Vented Headwall Detail

DWG. NO.

MATERIAL

DR KRK DATE 11/20/2014

APP DATE

SH. SIZE B SCALE X:X