WOOD WINDOW SILL PAN FLASHING

A GUIDE TO INSTALLING SLOPED SILL WOOD WINDOWS

The "Wood Window Sill Pan Flashing" installation guide is designed for wood windows that utilize sloped sills, where the window is installed after the weather-resistive barrier is applied. ***Fortifiber Building Systems Group®*** *provides this installation guide to assist installers by demonstrating an efficient and effective method for exterior window flashing installation. Compliance with the building code and proper installation are critical in reducing potential water leakage points.*

The following ***Fortifiber*** *products are used in this guide:*

- ***FortiFlash® Self Adhesive Waterproof Flashing Membrane 4, 6, 9, 12, 18 and 36 inch x 75' rolls***
- ***FortiFlash® Commercial Self Adhesive Waterproof Flashing Membrane 6, 9, 12 and 18 inch x 75' rolls***
- ***FortiFlash® Butyl Self Adhesive Waterproof Flashing Membrane 4, 6, 9 and 12 inch x 75' rolls***
- ***Moistop E-Z Seal Self Adhesive Flashing, 6, 9, 12 inch x 75' rolls***
- ***Moistop neXT® Flashing, 6, 9 and 12 inch x 200' rolls***
- ***Moistop PF® Flashing, 6, 9, 12 and 18 inch x 300' rolls***
- ***Moistop Corner Shield®***
- ***Moistop® Sealant***
- ***Fortifiber Sheathing Tape***

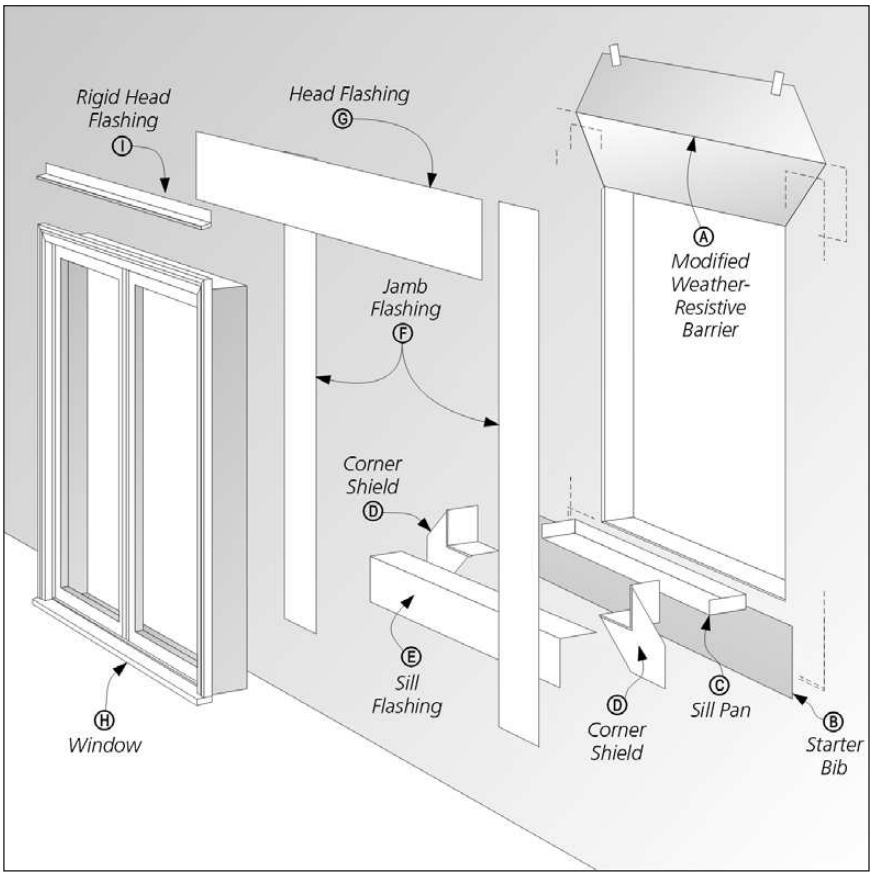

1 MODIFY WEATHER-RESISTIVE BARRIER

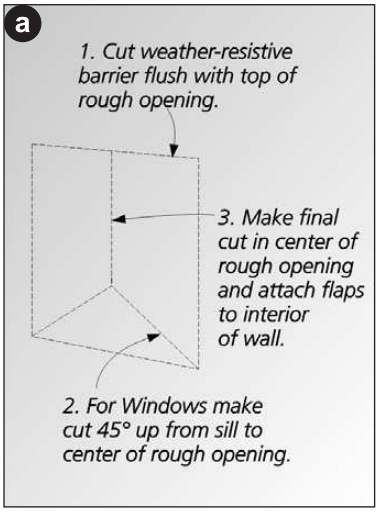

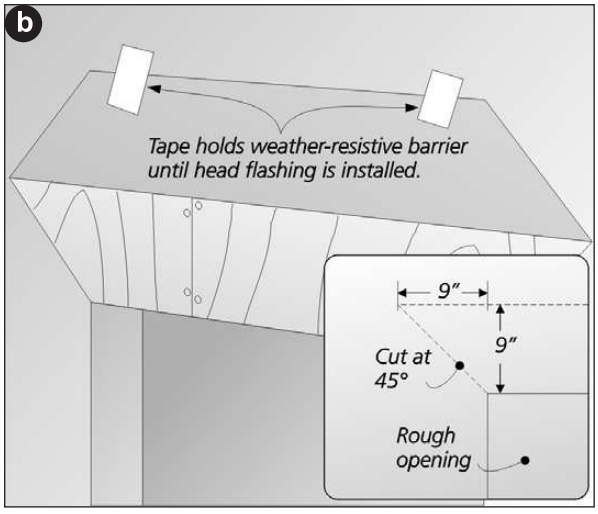

At the rough opening ***(1a)****, cut the weather-resistive barrier in an inverted "Y" fashion, and then fasten with the methods show above. To allow for head flashing integration,* ***(1b)*** *make the following diagonal cuts at the top of the rough opening corners. For 9" flashing measure as follows: 9" up and 9" over, (45° angle). Cut on the diagonal from marked point to the rough opening corner. Gently raise the top edge of the weather-resistive barrier and tape the corners and the center to the barrier suface above. This will allow for the installation of the window and the jamb and head flashing later.*

2 STARTER BIB

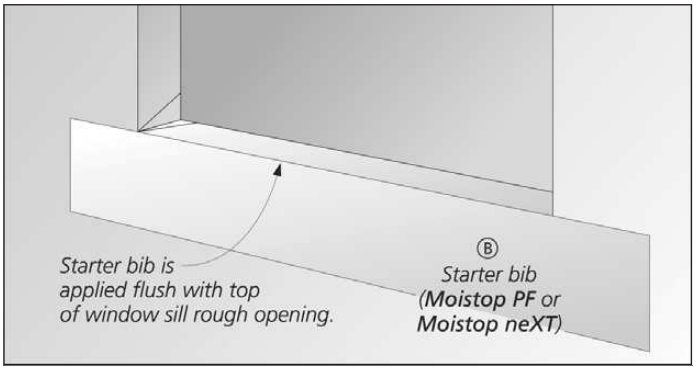

Cut the starter bib to the width of the rough opening plus twice the jamb flashing width, minus 1". Attach the starter bib flush along the bottom of the rough opening.

3 INSTALL SILL PAN

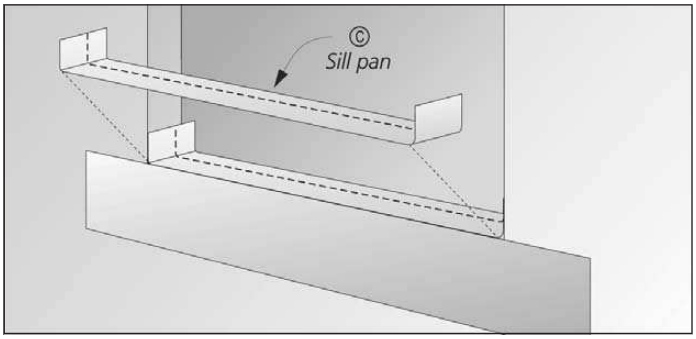

Place the sill pan with sides upturned in the rough opening. The leading edge of the sill pan must be aligned with the front of the rough opening.

4 SILL CORNERS

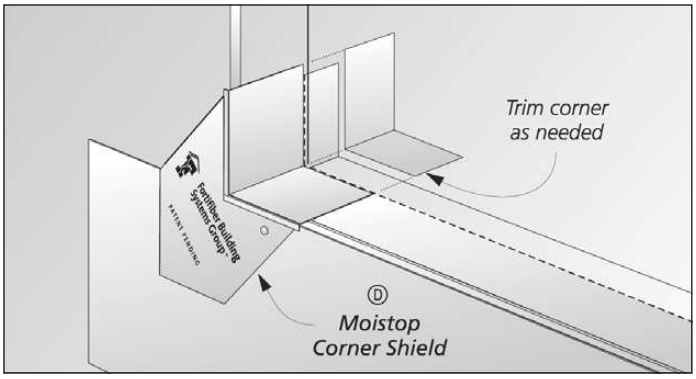

*Install **Moistop Corner Shield** at each corner on top of the sill pan. If necessary, trim the back edge of the sill corners so they **do not** extend past the sill pan fold line.*

5 INSTALL SILL WRAP

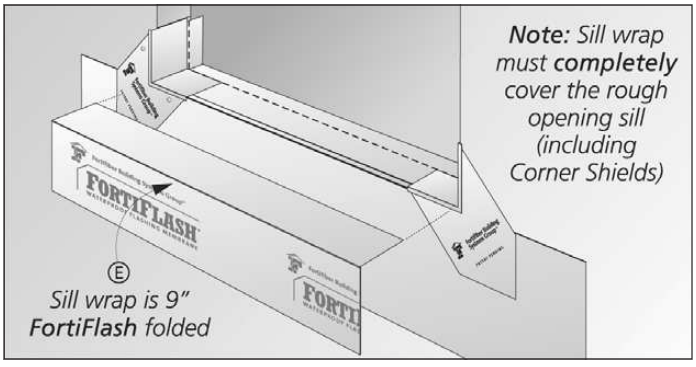

*Cut 9" **FortiFlash** to the width of the rough opening. Align back edge of **FortiFlash** to the marked fold line of the sill pan and fold over the front of the bib.*

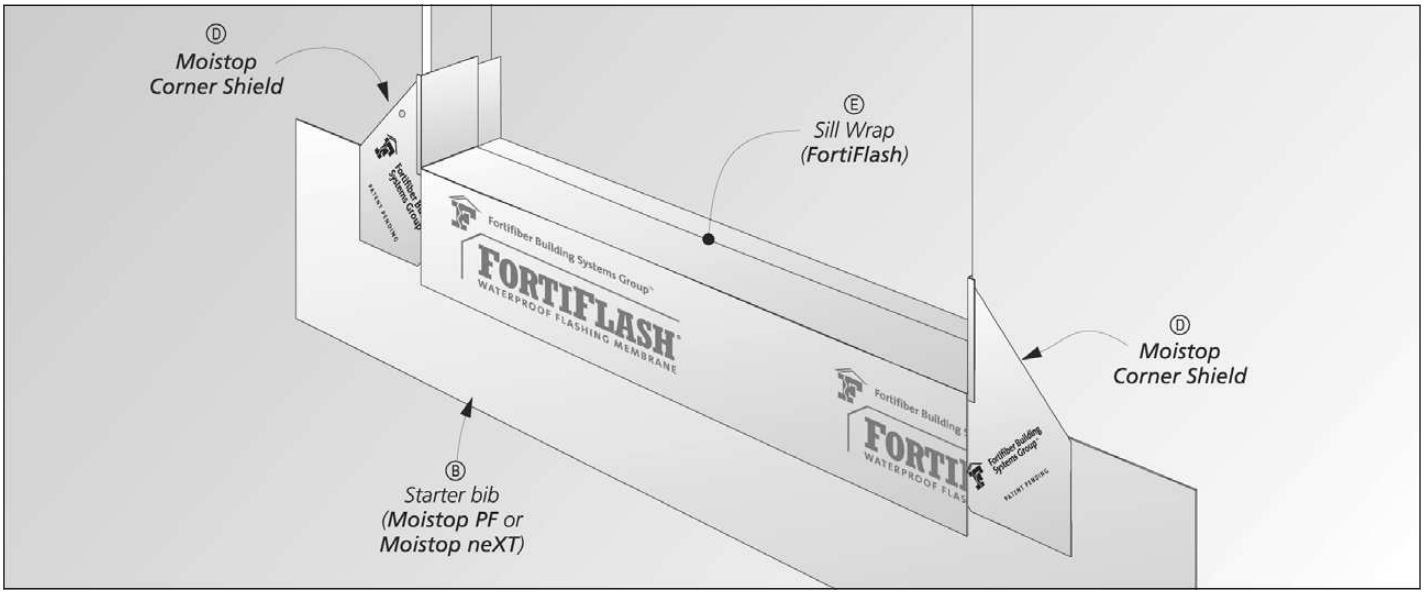

7 INSTALL JAMB FLASHING

*Cut the jamb flashing to the height of the rough opening plus 2x the flashing width, minus 1". Align the flashing flush to the edge of the rough opening and within 2" of the top of the head flashing **(7a)** and 1/2" of the bottom of the starter bib **(7b)**.*

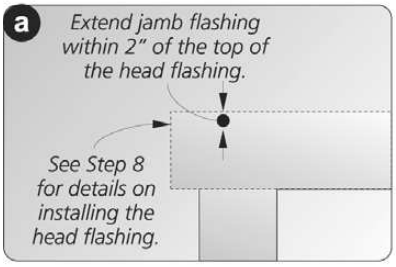

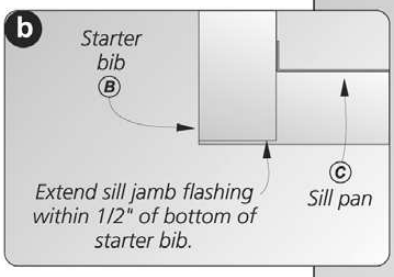

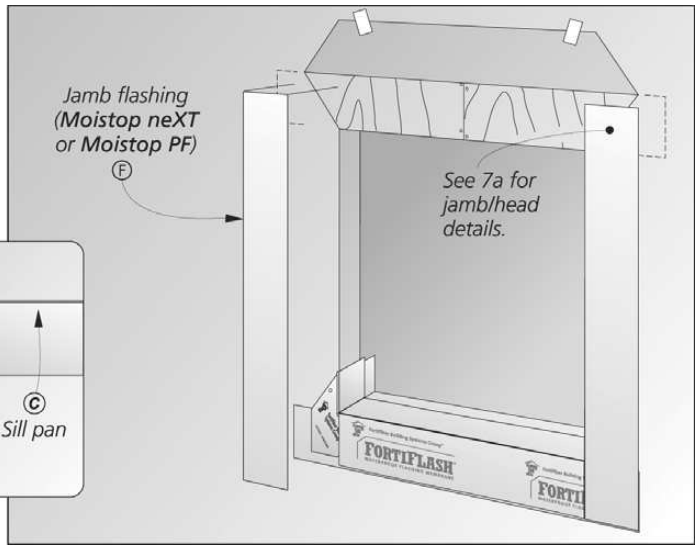

8 HEAD FLASHING

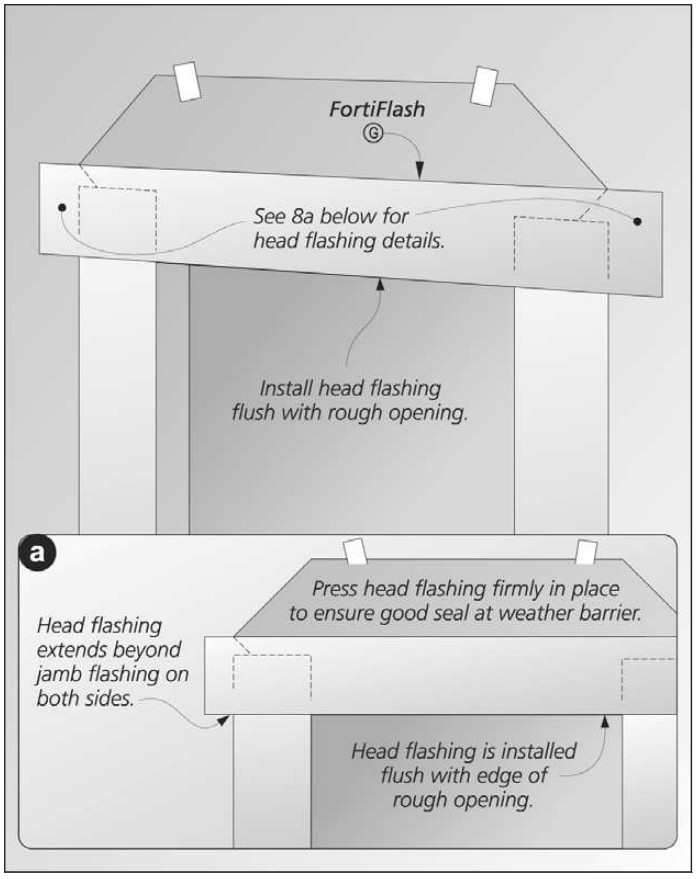

*Wipe the jamb flashing, weather-resistive barrier, and sheathing with a clean rag. Cut a piece of flashing to size. **Note:** the length of the head flashing is the width of the rough opening + 2x the width of the flashing **plus 2" (8a)**. Install the head flashing by pressing firmly in place in one*

9 INSTALL WINDOW

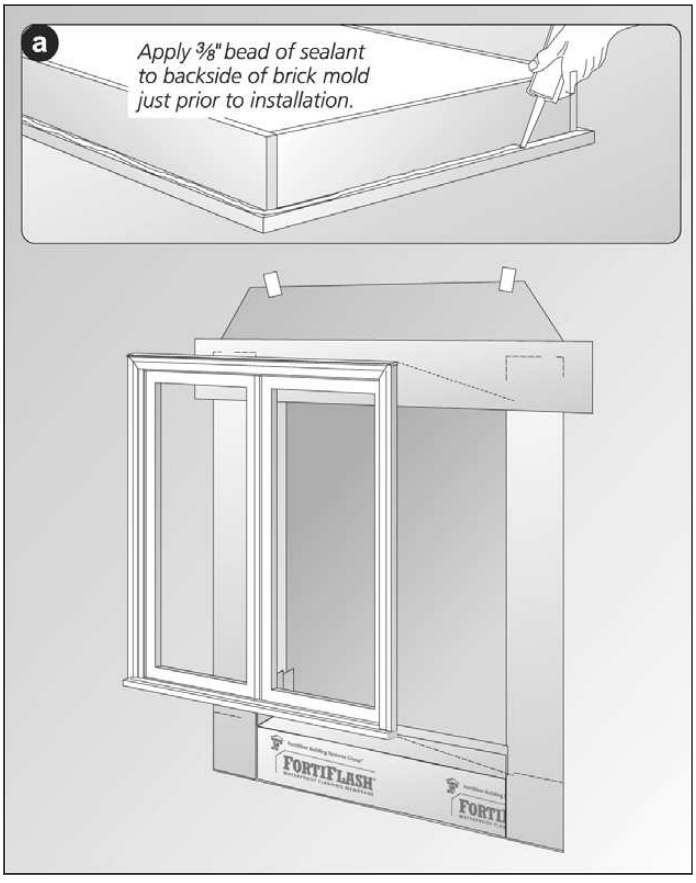

*Before installing the door or window, apply a 3/8" continuous bead of Moistop Sealant **(9a)** to the backside (interior) of the brickmold. Install the window or door according to the manufacturer's instructions.*

10 RIGID HEAD FLASHING

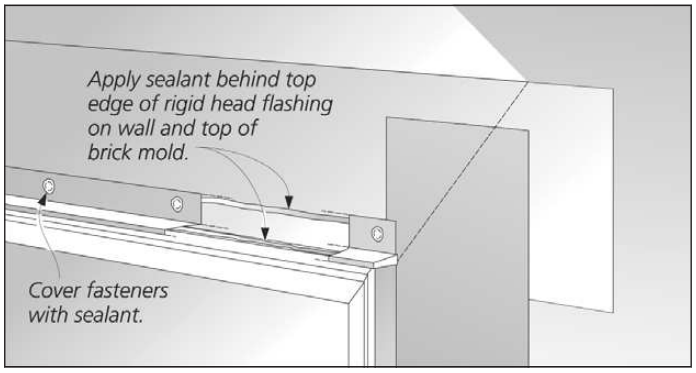

Prior to installing the rigid head flashing apply a 3/8" bead of sealant to the top of brick mold. Then place sealant on the top edge (interior side) of rigid head flashing. Place head flashing over brick mold and fasten with galvanized nails or screws. Apply sealant over these fasteners.

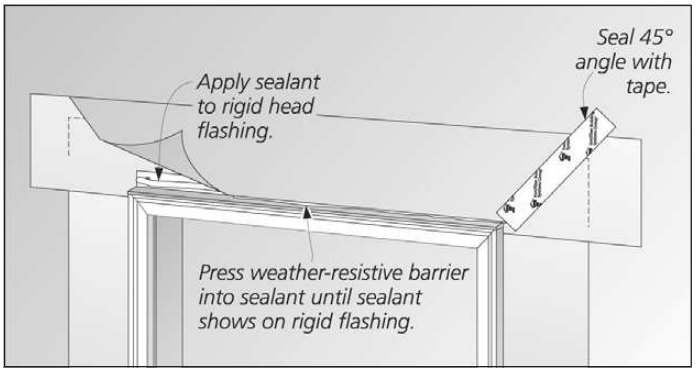

Place a 3/8" bead sealant along the lower portion of the upturned leg of the rigid flashing. This will allow the weather-resistive barrier to be applied in sealant. Finally, allow the flap of the weather-resistive barrier to lay flat over the sealant and rigid head flashing. Press flap into sealant and apply a new piece of sheathing tape over the entire diagonal cut made in the weather resistive barrier and press firmly in place.

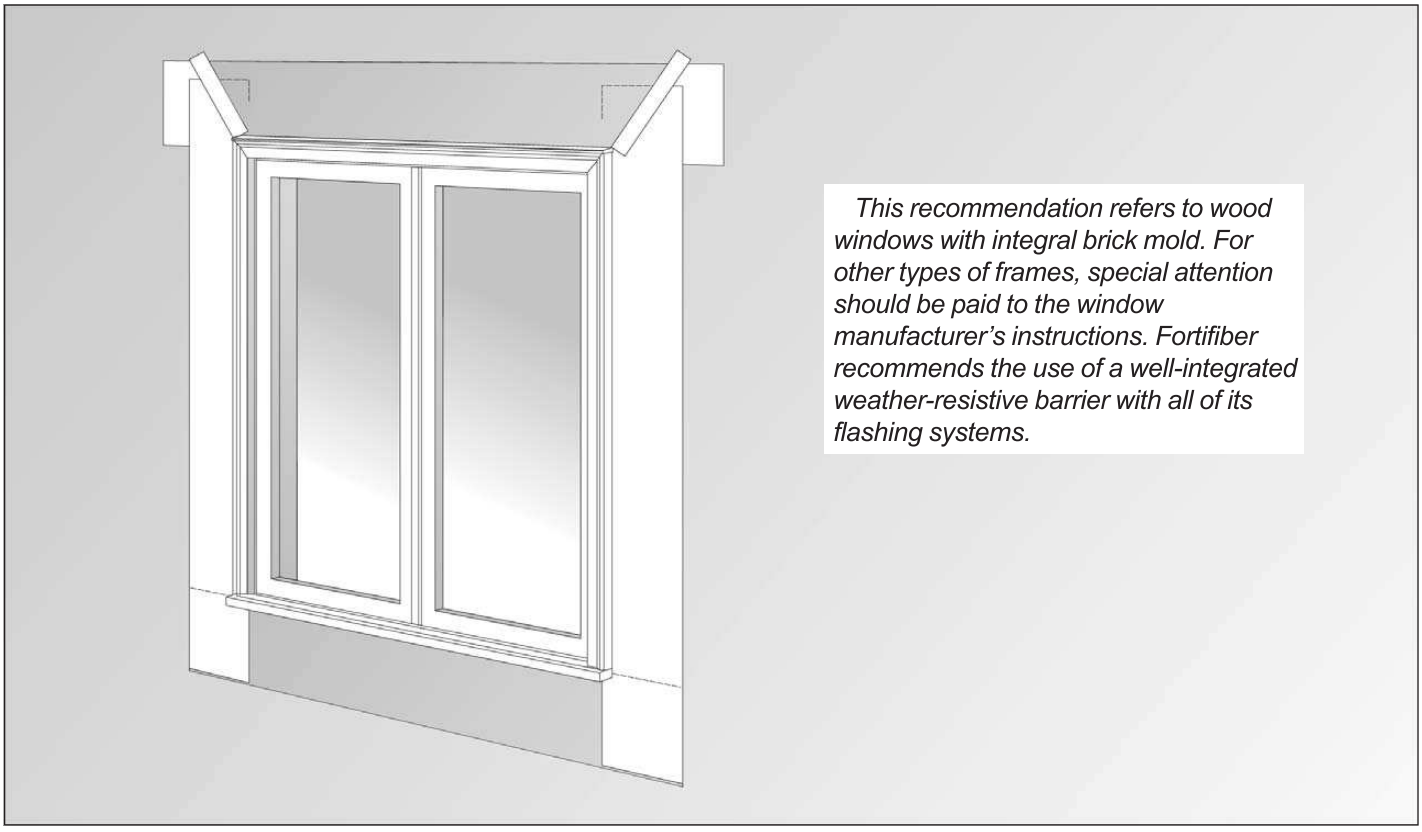

This recommendation refers to wood windows with integral brick mold. For other types of frames, special attention should be paid to the window manufacturer's instructions. Fortifiber recommends the use of a well-integrated weather-resistive barrier with all of its flashing systems.

Limitations: For optimum adhesion, **FortiFlash**, **FortiFlash Commercial** and **Moistop E-Z Seal** flashings should be applied at temperatures between 40° F (4.4° C) and 120° F (48.9° C); **FortiFlash Butyl** may be applied at temperatures between 25° F (3.9° C) and 125° F (51.7° C). Be cautious about using FortiFlash where it can be exposed to temperatures above its Service Temperature such as hot climates or behind fiber cement and metal sidings that absorb a significant amount of heat. FortiFlash, FortiFlash Commercial and FortiFlash Butyl are the only Fortifiber flashing products that can be installed horizontally or at a slope of less than 60°. Where installed horizontally or with a slope of less than 60° do not use fasteners. Product should be covered as soon as possible. Inspect product to insure it is free of any protrusions or damage which may compromise its moisture-resistive properties. **FortiFlash is not compatible with EPDM or flexible (plasticized) Polyvinyl Chloride (PVC) based products. FortiFlash and Moistop E-Z Seal are not compatible with some sealants. Consult with sealant manufacturer for compatibility information.** Direct exposure of sealant to the adhesive side of FortiFlash or Moistop E-Z Seal can be detrimental if the amount of sealant exceeds what is specified above. Please follow these recommendations regarding location and amount of sealant to be used. Fortifiber strongly recommends against the practice of using a "knockdown bead of sealant," or "buttering the flange" with sealant, because this amount of sealant is excessive and unnecessary.

Call 1-800-773-4777 Nationwide for Technical Assistance or visit our website at *www fortifiber com*

Fortifiber Building Systems Group®

Protecting Your World from the Elements ®

NATIONAL SALES OFFICE – Fernley, NV

(10/8/15)