HWD-15®

HARDWOOD FLOOR UNDERLAYMENT

In the battle against interior moisture damage, the best defense is a strong offense. When you reduce moisture vapor rising from beneath moisture-sensitive wood flooring, you help increase the useful life and protect the appearance of finished floors. To help win the battle, the Fortifiber Building Systems Group® offers HWD-15 as economical insurance to reduce most moisture-related flooring problems.

"HWD-15 helps protect against moisture vapor related problems such as buckling, cupping or cracking."

HWD-15 hardwood floor underlayment is an economical and extremely effective Class III moisture vapor retarder specifically designed for optimum performance in wood flooring applications. Consisting of a single layer of kraft paper saturated with asphalt, HWD-15 is a permeable vapor retarder. It reduces vapor flow, without trapping moisture.

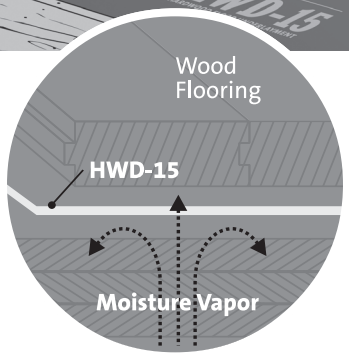

HWD-15 helps slow moisture vapor originating below the floor system, allowing the wood flooring to acclimate gradually.

Clean and Easy Handling

HWD-15 passes the stringent requirements of California's Section 01350 Indoor Air Quality emissions standard. With little or no asphalt rub-off or odor, HWD-15 is considerably cleaner than other materials, such as roofing felt. It's also lighter and easier to work with. It aids installation by providing a smoother surface for positioning flooring. Because HWD-15 is thinner, edge laps don't get in the way during installation of wood strips. It also acts as a "slip sheet" to minimize dust and reduce noise.

Ideal for Wood Flooring

With a moisture vapor permeance of 5, HWD-15 is a Class III vapor retarder for wood flooring applications. HWD-15 helps slow moisture vapor originating below the floor system, allowing the wood flooring to acclimate gradually to changes in interior environmental conditions. By reducing the rate of moisture migration, HWD-15 protects against moisture vapor related floor problems such as buckling, cupping or cracking. As a permeable material, HWD-15 will not trap moisture condensation between it and the sub-floor, which can happen with poly films and other vapor retarders.

- **Passes California CA01350 Indoor Air Quality Requirements**
- **Reduces Moisture Related Problems**
- **Optimum Vapor Permeance**
- **Excellent Price-Performance**
- **Clean & Easy Installation**
- **Meets IRC and IBC Requirements as a Class III Vapor Retarder**

Decades of Proven Performance

HWD-15 is a product manufactured by the Fortifiber Building Systems Group. With more than a seventy-five year history of proven performance, technical expertise and practical know-how, the company has become a trusted partner to builders, architects and code officials.

since 1939

Product Description: HWD-15 Hardwood Floor Underlayment is a superior building paper used to cover the sub-floor to reduce moisture vapor flow and aid in installation of wood flooring.

Composition: HWD-15 is a single ply, asphalt saturated, kraft paper.

Size & Weight: HWD-15 is supplied in 36" wide rolls by 144 lineal feet (432 sq. ft.); product weight is approximately 2.5 lbs/100 sq. ft.

Applicable Standards: Meets the International Building Code and International Residential Code as a Class III vapor retarder.

Meets CA01350 Indoor Air Quality Emission Requirements.

Exceeds Federal Specification UU-B-790a, Type 1, Grade D, Style 2, water vapor permeable.

American Society for Testing & Materials (ASTM)

- *ASTM D-146 Standard Test Methods for Sampling and Testing Bitumen-Saturated Felts and Woven Fabrics for Roofing and Waterproofing*
- *ASTM D-689 Standard Test Method for Internal Tearing Resistance of Paper*
- *ASTM D-4869 Standard Specification for Asphalt-Saturated Organic Felt Underlayment Used in Steep Slope Roofing*
- *ASTM E-96 - Water Vapor Transmission of Materials*

Physical Properties: HWD-15 is continually tested in accordance with ASTM procedures. The values shown in Table 1 are averages obtained in these tests.

Limitations: HWD-15 moisture retarder paper is not a waterproof membrane and should not be used in waterproofing assemblies or where a waterproof membrane is specified. Do not use in high moisture or steam areas. Properly prepared sub-floors or job site conditions and proper installation of flooring are the responsibility of the installer. In applications where a Class II vapor retarder or 30/30/30 asphalt laminated paper is specified, use Fortifiber's Aquabar® "B"; in applications where a Class I vapor retarder or 6 mil polyethylene film is specified, use Fortifiber's Moistop Ultra® or FortiFlash® 40 for Floors.

Installation - General: Concrete or wood sub-floor must be dry and tested for moisture, flat, structurally sound, and free of protrusions and contaminants. Sweep sub-floors clean of debris to avoid punctures and tears. Cut HWD-15 to length as required for proper coverage and overlap all seams a minimum of 4 inches. Avoid puncturing HWD-15. **See the HWD-15 installation guide** for complete details available at fortifiber.com/hwd-15.html

For best results when installing wood flooring, Fortifiber suggests using a properly trained or certified installer, such as a National Wood Flooring Association Certified Professional.

Installation - Wood Floors: For wood flooring, obtain, read and follow the wood flooring manufacturer's instructions, NWFA Installation Guidelines, and local building codes for proper installation of wood flooring over HWD-15 and sub-floor.

For installations **above a crawl space**, make sure the ground has been properly covered by Moistop Ultra®, a Class I vapor retarder meeting ASTM E-1754 with a maximum perm rating of 0.04 or less, and the crawl space is properly cross vented or meets code requirements as a closed crawl space.

Over concrete under a floating wood sub-floor system, screed system or floating floor, apply Fortifiber's Moistop Ultra 6 or FortiFlash® 40 for Floors. Under mechanically-attached wood panels, use FortiFlash 40 for Floors as the Class I vapor retarder between concrete and plywood. Then install Aquabar "B" over the plywood followed by the wood flooring.

Availability: The Fortifiber Building Systems Group's products are distributed nationwide. For product information and pricing, please call a Fortifiber distributor near you. If you need assistance locating a participating distributor, please call our Customer Service Department at 1-800-773-4777.

Warranty: Fortifiber Corporation warrants that HWD-15 is in compliance with its published specifications and is free from defects in materials and workmanship for a period of two years from the date of purchase. This warranty does not apply to loss due to abuse. Material found to be defective will be replaced at no charge by Fortifiber, but in no event shall Fortifiber be liable for any other costs or damages, including any labor costs.

THIS EXPRESS WARRANTY IS GIVEN IN LIEU OF AND EXCLUDES ALL OTHER EXPRESS OR IMPLIED WARRANTIES, INCLUDING BUT NOT LIMITED TO THE IMPLIED WARRANTIES OF MERCHANTABILITY AND FITNESS FOR A PARTICULAR PURPOSE. Fortifiber's sole obligations under this warranty are as set forth herein. In no event shall Fortifiber be liable for any lost revenue or profits, direct, indirect, special, incidental or consequential damages of any kind.

SPECIFICATION SUMMARY: Provides moisture vapor retarder underlayment beneath wood flooring.

MOISTURE VAPOR RETARDER: Fortifiber/HWD-15 single ply, asphalt saturated kraft Grade D paper.

REFERENCE SPECIFICATION: Federal Specification UU-B-790a, Type 1, Grade D, Style 2.

Table 1- Physical Properties

Characteristic	Test Method	Results	Standard
VOC Emissions	CA01350	Pass (Below Detectable Limit)	Pass
Water Vapor Transmission	ASTM E-96 (A)	5 perms	1.0 ≤ 10 perms
Tear Strength	ASTM D-689	>.44 lb.f	>.44 lb.f min.
Liquid Water Transmission	ASTM D-4869	Pass	Pass
Pliability	ASTM D-164	Pass	No Cracking

Fortifiber Building Systems Group®
Protecting Your World from the Elements®

nwfa National Wood Flooring Association MEMBER

Call 1-800-773-4777 or 1-775-333-6400 for sales and technical assistance. On the Internet visit www.fortifiber.com.

© 2015 Fortifiber Building Systems Group. Aquabar® "B", Fortifiber®, FortiFlash®, HWD-15®, Moistop Ultra®, Orange Label Sisalkraft® and Protecting Your World from the Elements® are trademarks of Fortifiber Corporation. 4/16

APPLICATIONS FOR HWD-15®
HARDWOOD FLOOR UNDERLAYMENT

THE DETAILS SHOWN HERE REFER TO GENERALLY ACCEPTED INSTALLATION GUIDELINES

HWD-15 meets IRC and IBC requirements as a Class III moisture and vapor retarder, reducing or preventing moisture migration. By allowing wood flooring time to adjust gradually to changes in moisture conditions, you protect against moisture related problems in wood floors. **HWD-15** also aids installation by providing a smooth surface for positioning flooring. It covers residual dust on sub-floors after sweeping, and reduces noise such as wood-on-wood squeaks. Cleaner-handling than roofing felt, **HWD-15** Hardwood Floor Underlayment minimizes asphalt rub-off during installation.

HWD-15 exceeds California Indoor Air Quality standards, and is an industry accepted vapor retarder meeting NWFA installation guidelines and IRC and IBC requirements. As a permeable Class III vapor retarder, **HWD-15** is not likely to trap moisture on top of or within the sub-floor like an impermeable poly film or poly-coated material does. Although **HWD-15** slows moisture migration, it is not a moisture barrier.

This guide provides examples of typical hardwood flooring installations employing **HWD-15**. The descriptions are brief and do not cover all circumstances that an installer may encounter during installation. It is the responsibility of the installer to obtain, read and follow the flooring manufacturer's complete instructions, industry guidelines and local building codes.

For best results when installing, we suggest using a NWFA Certified Professional.

BEFORE YOU BEGIN

JOB SITE CONDITIONS

Evaluate jobsite before flooring is delivered and installation begins.

- Building must be completely enclosed.
- Site drainage directs water away from foundation.
- All other interior work should be completed.
- Interior environmental conditions must be at occupied levels.
- Basements and crawl spaces must be dry.

INSTALLATION ENVIRONMENT AND SUB-FLOOR PREPARATION

Regardless of the sub-floor the hardwood flooring is installed over, several elements are critical to a quality installation. First, any wood (plywood or screeds) that the flooring is attached to should have a moisture content within the range for the specific area. Second, the flooring material needs to be on the job site, unbundled, and allowed to acclimate to the conditioned interior space prior to installation.

WOOD SUB-FLOOR PREPARATION

- All surface debris and protrusions must be removed.
- Check sub-floor for squeaks and repair.
- Sweep and vacuum prior to filling or repairing voids.
- Fill voids and level high spots, sweep again.
- Check flooring and sub-floors for moisture content by an appropriate method per flooring manufacturer's recommendation.
- Acclimate flooring per manufacturer's recommendation.

WOOD SUB-FLOORS - NAILED

Always read and follow the floor manufacturer's installation instructions. Cut **HWD-15** to length and position over wood sub-floor as needed for proper coverage. Overlap edge seams a minimum of 4 inches at lap line. HWD-15 may be loose laid or stapled in place. Never use a vapor retarder with a perm rating of < 0.70, such as poly film or coated paper, over a wood sub-floor. Red rosin and common building paper do not meet IRC, IBC or NWFA requirements, are not vapor retarders and should never be used in place of a vapor retarder.

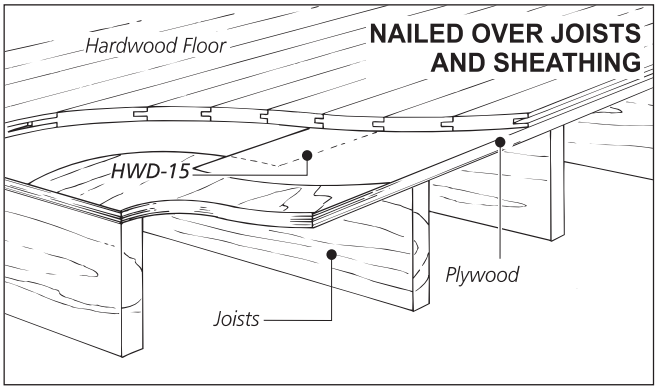

FOR WOOD SUB-FLOORS ABOVE CRAWL SPACE

- Crawl space must be a minimum 18" from ground to underside of joists and properly cross vented as required by local code.
- Crawl space earth must be covered 100% by a Class I vapor retarder with a perm rating of ≤0.04, such as **Moistop Ultra® 6, 10 or 15**, a superior, puncture resistant and more durable membrane meeting ASTM D-1745.
- Overlap crawl space vapor barrier a minimum 6" and tape with **Moistop® Tape**.
- Vapor barrier must extend a minimum 6" up stem wall and above any visible signs of wicking, be attached and sealed to stem wall.

FOR ON-GRADE OR BELOW-GRADE CONCRETE SUB-FLOORS

- Check for presence of an underslab vapor retarder meeting ASTM D-1745, such as **Moistop Ultra** family of products. Consult local building codes for minimum requirements.
- The slab must be thoroughly dry before installation of wood flooring. Generally slabs must be 60 days old. Test for moisture following flooring manufacturer's recommendations.

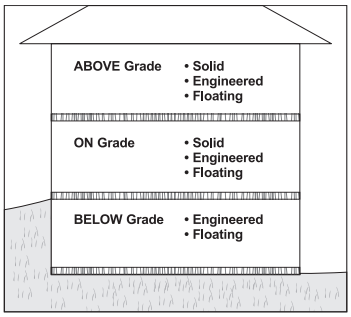

Continued on reverse...

****The Moistop Ultra® family of underslab vapor retarders are critical for Wood and Tile floors placed on concrete slabs.***

APPLICATIONS FOR HWD-15®
HARDWOOD FLOOR UNDERLAYMENT

...continued from front

CONCRETE SUB-FLOORS - FLOATED & NAILED

- If excessive moisture is present (85% relative humidity test or >3 lbs. by calcium chloride test) install a Class I vapor retarder with rating of ≤0.04 perms over the slab, such as **Moistop Ultra**, and tape seams.
- Below-grade, only use flooring recommend by the flooring manufacturer for below-grade installations
- Follow wood floor manufacturer's recommendation or NWFA guidelines for placement of plywood over vapor retarder.
- Cut and install **HWD-15** over plywood as above
- Follow wood floor manufacturer's instructions or NWFA guidelines for wood flooring installation.

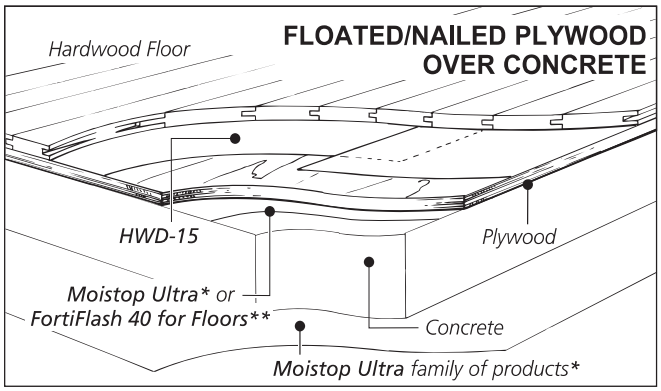

CONCRETE SUB-FLOORS - SCREED SYSTEM

For on-grade slabs,

- Install flat, dry, preservative treated 2x4s, cut 18-24" long, laid flat at right angles to finished floor, spaced 12" o. c. and embed in adhesive.
- Then lay a Class I vapor retarder with a perm rating of ≤0.04 over screeds, such as a minimum 6 mil Fortifiber **Moistop Ultra**.
- Install plywood and cover with **HWD-15** as above.
- Follow wood floor manufacturer's instructions or NWFA guidelines for wood flooring installation.

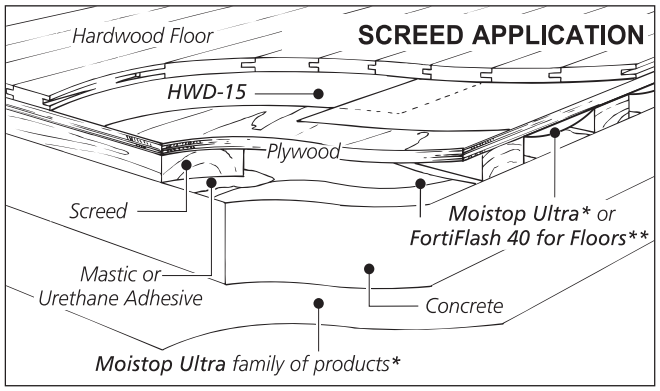

INSTALLING WOOD FLOORING

Wood flooring should be installed in accordance with wood flooring manufacturer's instructions or architect/specifier and all local building codes. For more detailed installation instructions for wood floors consult the manual: ***Hardwood Flooring Installation Guidelines*** available from:

National Wood Flooring Association
www.woodfloors.org 1-636-391-5161

Or ***Installing Hardwood Flooring*** available from:

National Oak Flooring Manufacturers Association
www.nofma.org 1-901-526-5016

FINISHED FLOORING PROTECTION

After installation, if you choose to protect the floor, cover the floor completely. Prior to covering, be sure finish is fully cured following finish manufacturer's recommendation. Use Fortifiber's **Seekure**, a durable, reinforced, protection paper, with a water holdout rating of >60 minutes, or **FortiBoard™**, an impact-resistant protection paper with 5 hour water holdout, yet breathable. Tape the protection paper to base or shoe mold using permeable, low adhesion **FortiBoard Tape**. Avoid taping to finished floor.

Fortifiber provides you with a full line of products that will help you protect your flooring investments:

- ***FortiFlash® 40 for Floors Vapor Retarder Membrane***
- ***FortiBoard™ Surface Protection***
- ***Seekure® Floor Protection Paper***
- ***Aquabar® "B" Barrier Paper***
- ***Orange Label Sisalkraft®***
- ***Moistop Ultra®*** *family of products*

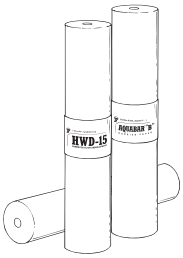

Passes CA01350 Indoor Air Quality Emission Requirements

nwfa National Wood Flooring Association MEMBER

Call 1-800-773-4777 Nationwide for Technical Assistance or visit our website at www.fortifiber.com

Fortifiber Building Systems Group®

Protecting Your World from the Elements®

NATIONAL SALES OFFICE – Fernley, NV **(4/16)**

LIMITATIONS: HWD-15 Moisture Vapor Retarder Paper is not a waterproof membrane and should not be used in waterproofing assemblies where a waterproof membrane is specified. Do not use in high moisture or steam areas. Properly prepared walls, sub-floors, jobsite conditions and proper installation of flooring are the responsibility of the installer. HWD-15 does not guarantee to eliminate moisture related problems; it serves to reduce the potential for, and extent of, moisture problems when properly installed. In radiant heat applications, use only floor and subfloor materials recommended by radiant heat, subfloor or floor manufacturer. The subfloor temperature must never exceed 85 degrees as currently recommended by the NWFA guidelines.

NOTE: In applications where duplex type, 30/30/30, asphalt laminated paper, meeting Fed Spec. UU-B-790a, Type 1, Grade B, Style 1a, or UBC Standard 14-1, is specified, use Fortifiber's **Aquabar® "B"** Barrier Paper. In applications where duplex type reinforced asphalt paper, meeting ASTM C-171, is specified use Fortifiber's **Orange Label Sisalkraft®**.