PB.1 PRODUCT DETAIL INSTALLATION DETAIL / Cross Section

COLUMN COLLAR

DRYWALL

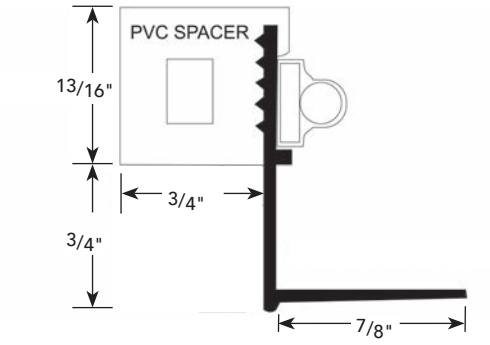

ACOUSTICAL/DRYWALL

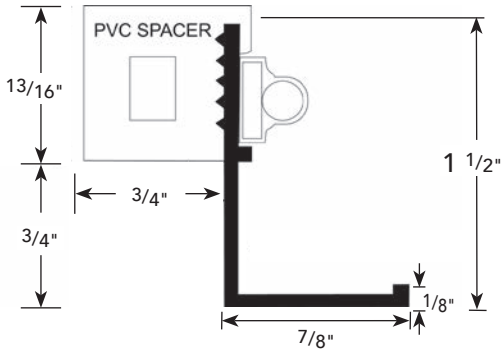

PLASTER

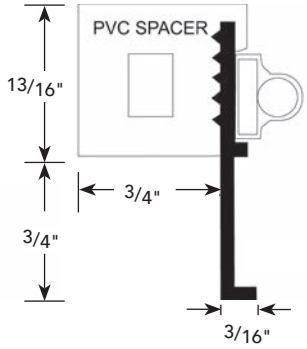

USAGE

Fry Reglet Column Collar provides a functional, attractive trim creating a reveal at column/ceiling joint. PVC spacer insures an attractive appearance and no light leaks. Fabricated to fit specific column sizes. Tightens in place with a turnbuckle and stainless steel metal band. Available with white or dark bronze PVC spacer. Finish is clear anodized, painted or finished with a chemical conversion coating for field painting.