401678 V4-03.2013

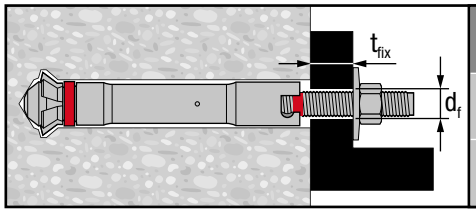

HDA-P	max. t_{fix}	d_f
HDA-P M20 × 250/50	50 mm	22 mm
HDA-P M20 × 250/100	100 mm	22 mm

1

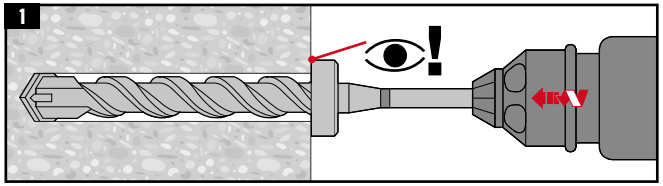

1.1

HDA-P	TE-Y (SDS max)
HDA-P M20 × 250/50	TE-Y-HDA-B 37 × 250
HDA-P M20 × 250/100	TE-Y-HDA-B 37 × 250

2

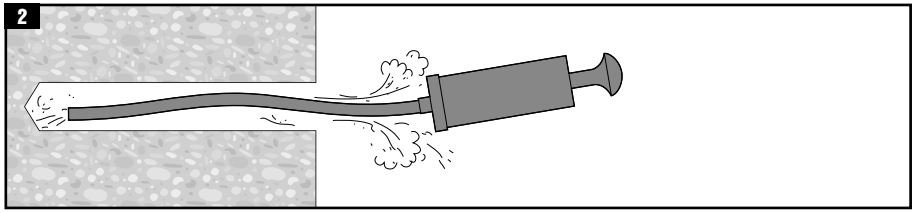

3

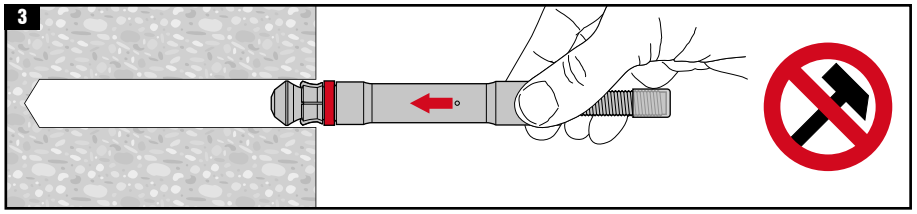

4

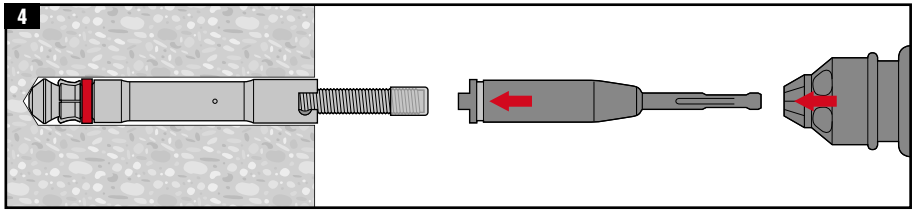

4.1

HDA-P	TE-Y (SDS max)
HDA-P M20	TE 70, TE 76, TE 80

4.2

HDA-P	TE-Y (SDS max)
HDA-P M20	TE-Y-HDA-ST37-M20

5

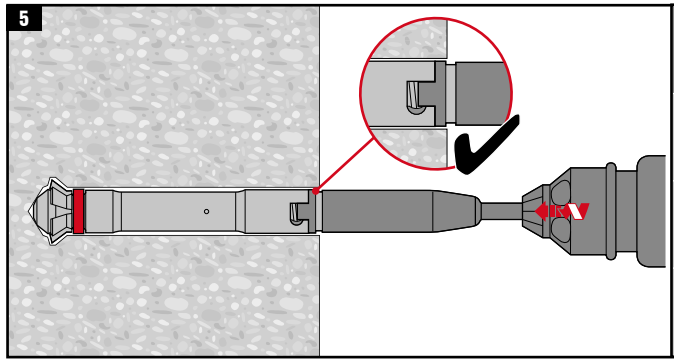

	$t_{setting}$
TE 70	20 ... 30 sec (max. 120 sec)
TE 76	30 ... 60 sec (max. 120 sec)
TE 80	30 ... 60 sec (max. 120 sec)

6

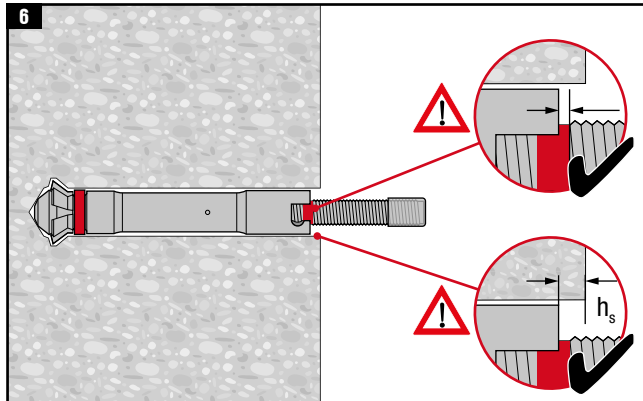

HDA-P M20: h_s 2 ... 8 mm (1/16 ” ... 5/16 ”)

7

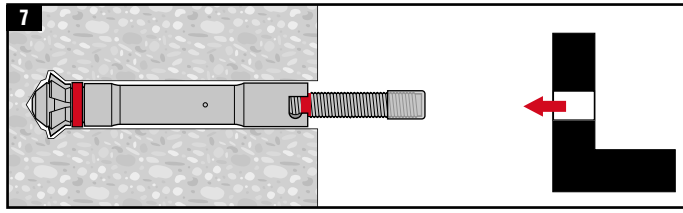

8

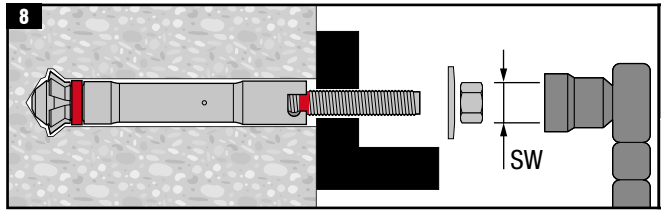

HDA-P	SW	T_{inst}
HDA-P M20	30	300 Nm (221 ft-lb)

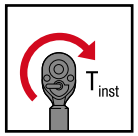

Printed: 18.04.2017 | Doc-Nr: PUB / 5131170 / 000 / 01