HOHMANN & BARNARD, INC.
a MiTek company

STAINLESS STEEL STONE ANCHORS

#424 STONE ANCHOR

The appropriate selection and use of any product contained herein must be determined by competent architects, engineers and other professionals who are familiar with the specific requirements of the project.

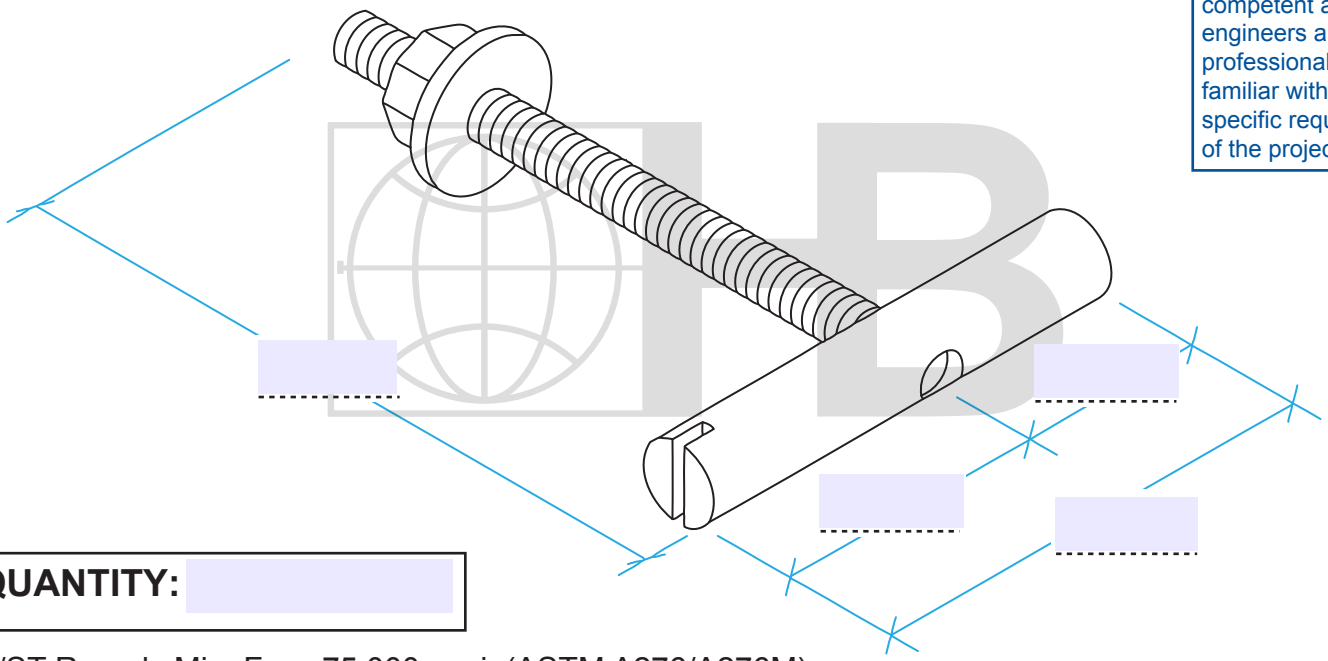

QUANTITY:

ST/ST Rounds Min. Fy. = 75,000 p.s.i. (ASTM A276/A276M)

DRAWINGS FOR ILLUSTRATIVE PURPOSES ONLY

FINISH:

- ☐ TYPE 304 Stainless Steel
- ☐ TYPE 316 Stainless Steel

DIAMETER (THREADED ROD):

- ☐ 1/4”/6.3 mm
- ☐ 1/2”/12.7 mm
- ☐ 3/4”/19 mm
- ☐ 3/8”/9.5 mm
- ☐ 5/8”/15.8 mm
- ☐ OTHER _____

DIAMETER (BARREL):

- ☐ 1/4”/6.3 mm
- ☐ 1/2”/12.7 mm
- ☐ 3/4”/19 mm
- ☐ 3/8”/9.5 mm
- ☐ 5/8”/15.8 mm
- ☐ OTHER _____

H&B recommends the exclusive use of 304 or 316 Stainless Steel for stone anchorage.

PROJECT NAME:

LOCATION:

NOTES:

CONTACT INFO

Name :

Company:

Phone: **FAX:**

Email:

Due to fabrication requirements and lead times, once a custom anchor order has been scheduled it cannot be cancelled and will not be returnable. Verify all measurements before signing this form. Any changes after the initial order is placed will require a new signed form, and an additional charge. By signing this document, you agree to the terms stated above and accept full responsibility for the accuracy of measurements.

Orders without a signature will not be processed.

ACCEPTED BY: _____

DATE: _____

HOHMANN & BARNARD, Inc.
30 Rasons Court | Hauppauge, NY 11788
CORPORATE HEADQUARTERS
T: 800.645.0616 F: 631.234.0683
www.h-b.com

Branch/Subsidiary Locations:
ALABAMA - ARIZONA - ILLINOIS
MARYLAND - NEW YORK - PENNSYLVANIA
TEXAS - MARYLAND - UTAH - CANADA

PRINT FORM | SAVE FORM | RESET FORM

© 2013-2016 MiTek®