Mechanically Fastened and Fully Adhered Details

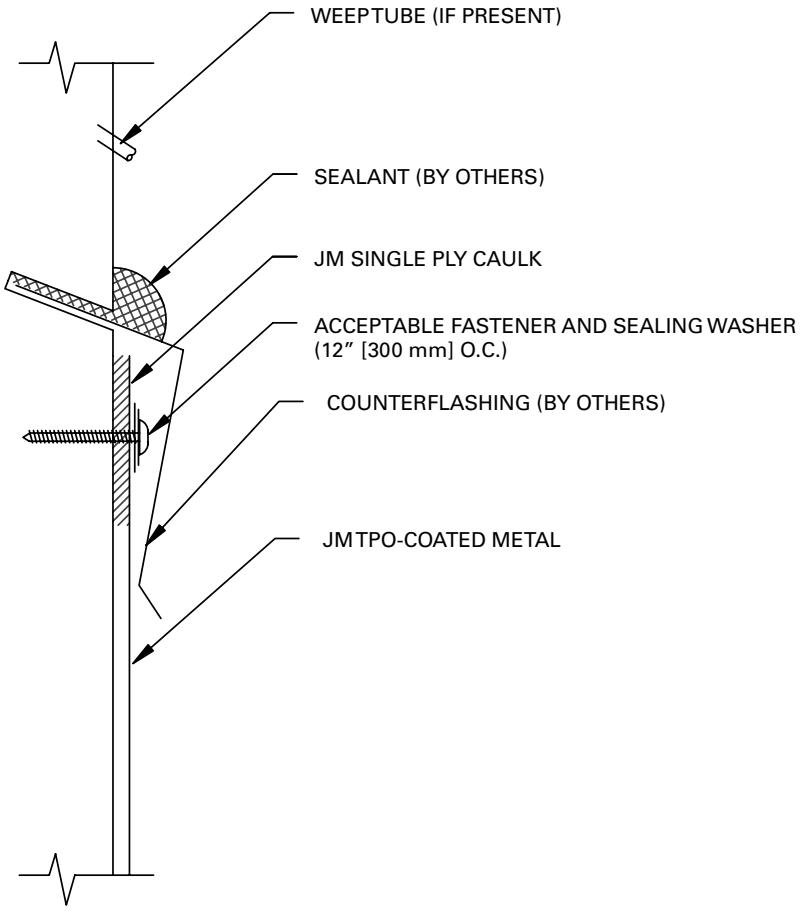

NOTES:

1. DETAILS TO BE USED IN CONJUNCTION WITH GUIDE SPECIFICATIONS CONTAINING REQUIREMENTS FOR NAILERS, INSULATION, ETC.
2. DO NOT APPLY JM SINGLE PLY CAULK OVER ASPHALT OR OTHER MATERIALS THAT WILL PREVENT PROPER ADHESION.

DRAWING NO.	COUNTERFLASHING (METAL)		
TC-40	SCALE N.T.S.	ISSUE DATE 3-06	CAD TPO-5.01