RIGID CONNECTORS

WRC RIGID CLIPS

The WRC series of clips connects exterior studs to the building structure and resists horizontal and lateral loads. The WRC has embossments and a continuous flange to allow for excellent load values. 25 pieces per box.

Part No.	Ga. (Mil)	Material	Finish	Size
WRC362	14ga (68)	50 KSI	G-90	4" x 1.5" x 3.5"
WRC600	14ga (68)	50 KSI	G-90	4" x 1.5" x 5.5"
WRC800	14ga (68)	50 KSI	G-90	4" x 1.5" x 7.5"
WRC1000	14ga (68)	50 KSI	G-90	4" x 1.5" x 9.5"
WRC1200	14ga (68)	50 KSI	G-90	4" x 1.5" x 11.5"

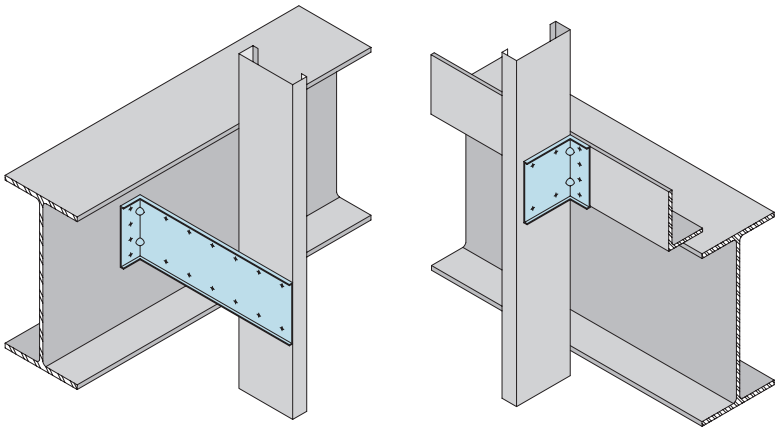

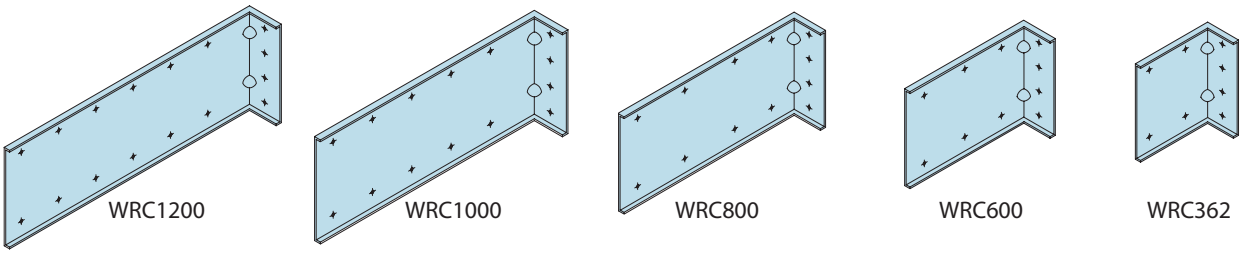

GUSSET PLATE (UNPUNCHED) (GP)

Designed for a variety of construction connections. Used for conditions such as roof, wall and floor framing connections. GPU Plate is used for in plane truss chord connections, header to jamb connections and tension strap connections. Adapts to varying construction tolerances.

MATERIAL: See Table, 50ksi

FINISH: Galvanized coating weight as requested.

INSTALLATION:
- As specified by design.
- 16 Gauge (54 mils) .0566" Design Thickness
- 12 Gauge (97 mils) .1017" Design Thickness
- Custom sizes available upon request.

Gusset Plate (Unpunched)

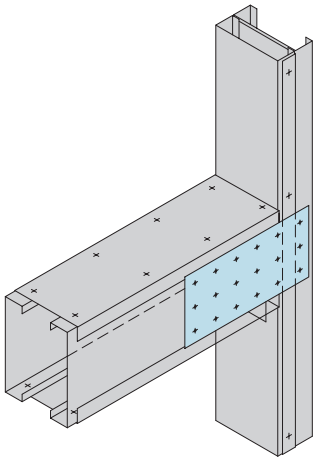

Model No.	Gauge	Size
GPU66-16	16	6"x6"
GPU612-16	16	6"x12"
GPU1212-16	16	12"x12"
GPU66-12	12	6"x6"
GPU612-12	12	6"x12"
GPU1212-12	12	12"x12"

For more information, please contact Marino\WARE® Technical Services at 866.545.1545
This technical information reflects the most current information available and supersedes any and all previous publications effective August 30, 2018 | CAT_FRC_REV_5_03242017 | © WARE Industries, Inc. 2018