Marino\WARE® Product Submittal Data

PRODUCT NAME: **250SLT250-30**

09.22.16 Non Structural Framing

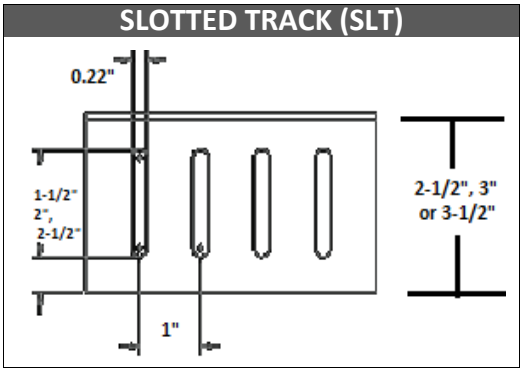

PROPERTIES:

A. Web (in)	2-1/2	**Yield Strength Fy (KSI)**	40
B. Flange (in)	2-1/2	**Design Thickness (in)**	0.0312
Mils	30	**Minimum Thickness (in)**	0.0296
Available Finish	G40, G60	**Gauge**	20
Slot (in)	1-1/2		

SECTION PROPERTIES

GROSS SECTION PROPERTIES

Cross Sectional Area: **A** (in^2)	0.2339
Weight of Member: (lb/ft)	0.7960
Section Modulus: **Sx** (in^3)	0.2315
Moment of Inertia: **Ix** (in^4)	0.3057
Radius of Gyration: **Rx** (in)	1.1431
Gross Moment of Inertia: **Iy** (in^4)	0.1604
Gross Radius of Gyration: **Ry** (in)	1.1431

TORSIONAL SECTION PROPERTIES

St. Venant Torsional Constant: **Jx1000** (in^4)	0.0759
Torsional Warping Constant: **Cw** (in^6)	0.1964
Shear Center to Centroid on Principal X-axis: **Xo** (in)	-1.881
Shear Center to Mid-Plane of the Web: **m** (in)	1.057
Radius of Gyration on the Centroid Principal axis: **Ro** (in)	2.351
Torsional Flexural Constant: **β** $[1-(xo/Ro)^2]$	0.360

CODES & STANDARDS

- AISI North American Specification 2007
- Meets ASTM A 1003, A 653, A 924 & C 645

GREEN INFO LEED® v3

Available LEED® points in the following categories:

- MR Credit 2 - Construction Waste Management (1-2 points)
- MR Credit 4 - Recycled Content (1-2 points)
- MR Credit 5 - Regional Materials (1-2 points)

- Total Recycled Content: 34.9%
- Post Consumer Content: 24.3%
- Pre Consumer (Post Industrial) Content: 9.4%

FIRE RATINGS

- Approved for these UL Head Of Wall Assemblies

HW-D-0003, HW-D-0020, HW-D-0021, HW-D-0024, HW-D-0025, HW-D-0029, HW-D-0031, HW-D-0032, HW-D-0033, HW-D-0034, HW-D-0036, HW-D-0042, HW-D-0043, HW-D-0044, HW-D-0045, HW-D-0046, HW-D-0049, HW-D-0054, HW-D-0058, HW-D-0059, HW-D-0062, HW-D-0063, HW-D-0071, HW-D-0072, HW-D-0073, HW-D-0076, HW-D-0077, HW-D-0079, HW-D-0082, HW-D-0083, HW-D-0084, HW-D-0085, HW-D-0087, HW-D-0088, HW-D-0089, HW-D-0099, HW-D-0101, HW-D-0102, HW-D-0103, HW-D-0104, HW-D-0105, HW-D-0106, HW-D-0107, HW-D-0108, HW-D-0111, HW-D-0127, HW-D-0128, HW-D-0129, HW-D-0130, HW-D-0134, HW-D-0136, HW-D-0139, HW-D-0144, HW-D-0146, HW-D-0152, HW-D-0154, HW-D-0162, HW-D-0170, HW-D-0173, HW-D-0179, HW-D-0180, HW-D-0184, HW-D-0185, HW-D-0190, HW-D-0191, HW-D-0194, HW-D-0205, HW-D-0209, HW-D-0210, HW-D-0217, HW-D-0218, HW-D-0221, HW-D-0222, HW-D-0223, HW-D-0227, HW-D-0227, HW-D-0228, HW-D-0238, HW-D-0239, HW-D-0241, HW-D-0242, HW-D-0243, HW-D-0247, HW-D-0249, HW-D-0252, HW-D-0287, HW-D-0259, HW-D-0260, HW-D-0263, HW-D-0264, HW-D-0265, HW-D-0271, HW-D-0272, HW-D-0278, HW-D-0283, HW-D-0288, HW-D-0292, HW-D-0295, HW-D-0297, HW-D-0298, HW-D-0299, HW-D-0304, HW-D-0305, HW-D-0309, HW-D-0310, HW-D-0313, HW-D-0314, HW-D-0315, HW-D-0316, HW-D-0317, HW-D-0320, HW-D-0321, HW-D-0322, HW-D-0324, HW-D-0342, HW-D-0363, HW-D-0365, HW-D-0371, HW-D-0377, HW-D-0380, HW-D-0381, HW-D-0388, HW-D-3393, HW-D-0396, HW-D-0453, HW-D-0456, HW-D-0457, HW-D-0483, HW-D-0484, HW-D-0485, HW-D-0486, HW-D-0523, HW-D-0541, HW-D-0542, HW-D-0545, HW-D-0546, HW-D-0547, HW-D-0548, HW-D-0549, HW-D-0564, HW-D-0569, HW-D-0570, HW-D-0571, HW-D-0572

For more information, please contact Marino\WARE Technical Services at 866-545-1545.

This technical information reflects the most current information available and supersedes any and all publications, effective 12/1/2010
©Copyright 2010 by Ware Industries, Inc. All rights reserved