Plank / Panels

Metal Trim Moldings

PLANK / PANELS	METAL TRIM MOLDING

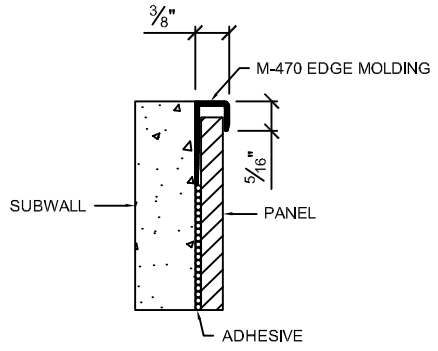

TOP EDGE - M-470 EDGE	1

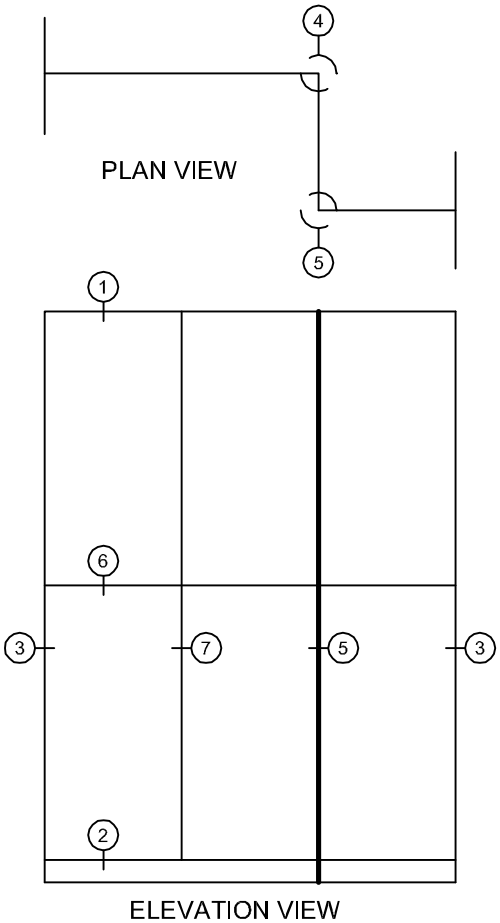

PLANK / PANELS	METAL TRIM MOLDING

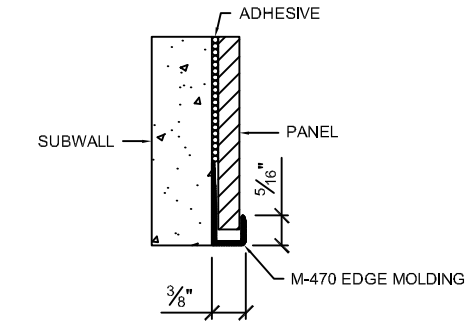

BOTTOM EDGE - M-470 EDGE	2

PLANK / PANELS	METAL TRIM MOLDING

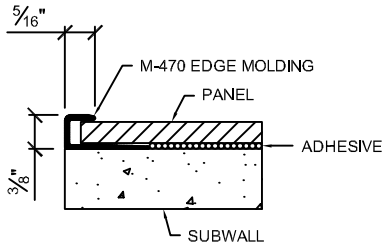

VERTICAL EDGE - M-470 EDGE	3

PLANK / PANELS	METAL TRIM MOLDING

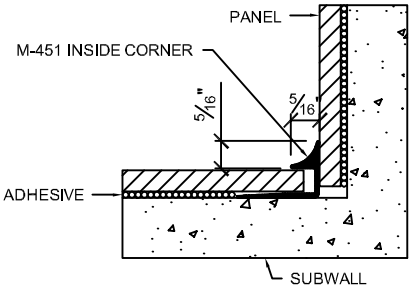

INSIDE CORNER - M-451	4

PLANK / PANELS	METAL TRIM MOLDING

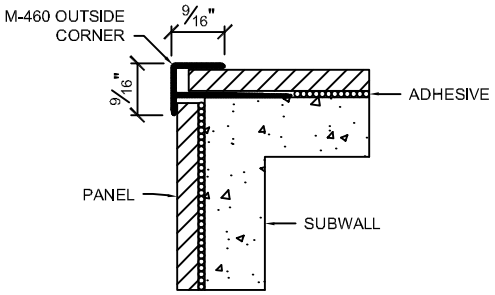

OUTSIDE CORNER - M-460	5

PLANK / PANELS	METAL TRIM MOLDING

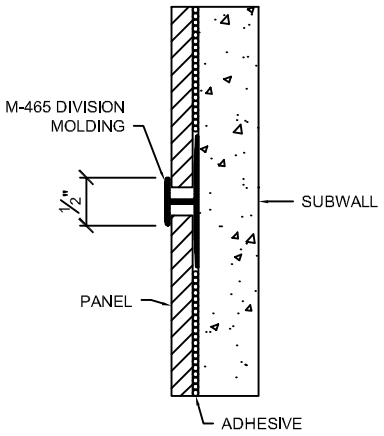

HORIZONTAL JOINT - M-465 DIVISION	6

PLANK / PANELS	METAL TRIM MOLDING

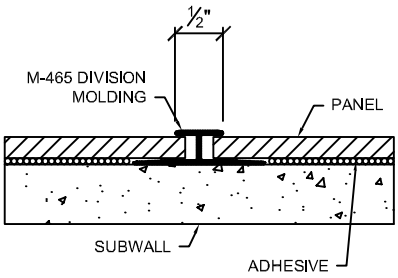

VERTICAL JOINT - M-465 DIVISION	7