Surface Systems

Radius Wall Trim & Reveals

SURFACE SYSTEMS (RW)	RADIUS WALL

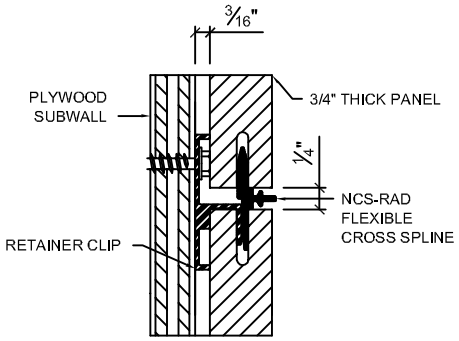

1/4" HORIZONTAL REVEAL - NCS-RAD	6

NOTE! MINIMUM RADIUS = 9'

PLAN VIEW

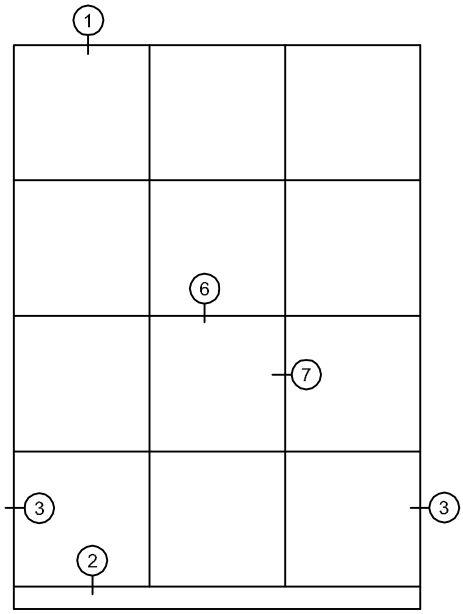

ELEVATION VIEW

SURFACE SYSTEMS (RW)	RADIUS WALL

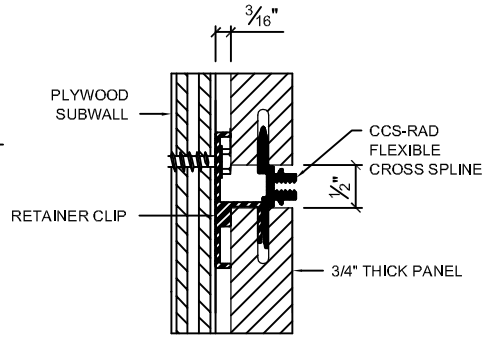

1/2" HORIZONTAL REVEAL - CCS-RAD	6

SURFACE SYSTEMS (RW)	RADIUS WALL

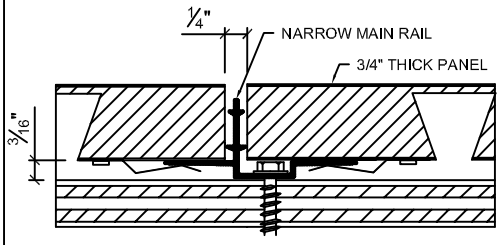

1/4" VERTICAL REVEAL - NML	7

SURFACE SYSTEMS (RW)	RADIUS WALL

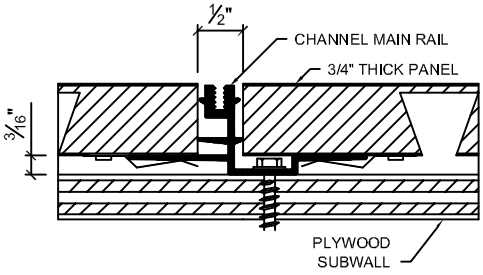

1/2" VERTICAL REVEAL - CML	7

SURFACE SYSTEMS (RW)	RADIUS WALL

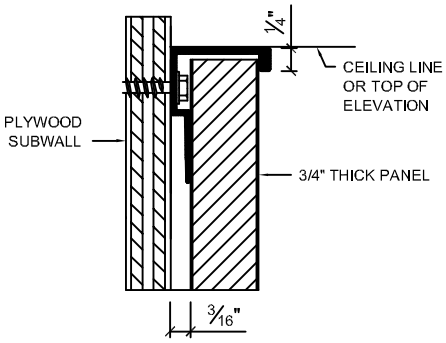

TOP EDGE - NL770 EDGE TRIM	1

SURFACE SYSTEMS (RW)	RADIUS WALL

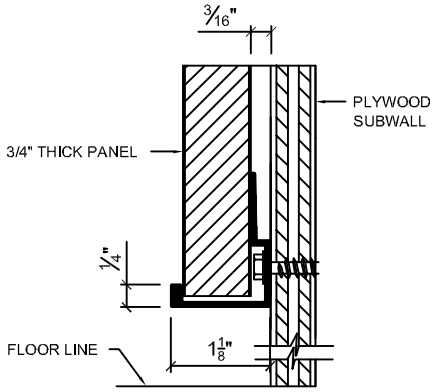

BOTTOM EDGE - NL770 EDGE TRIM	2

SURFACE SYSTEMS (RW)	RADIUS WALL

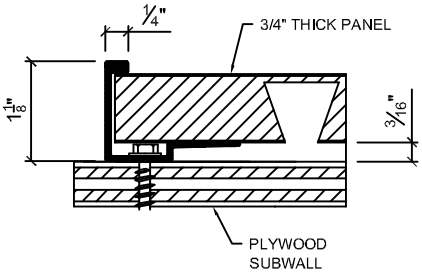

VERTICAL EDGE - NL770 EDGE TRIM	3

Marlite Dover, Ohio 44622 800-377-1221
www.marlite.com info@marlite.com