Structural Studs & Track

Industry standard nomenclature is used to identify MBA's products. The Steel Framing Industry Association has established standard designation codes for structural studs and track. In each case, the identification starts with the measurement of the width of the member, followed by a letter (S = stud and T = track) followed by the flange dimension. A hyphen is used to separate all of this from the thickness of the metal.

Member Depth:
*(Example: 6" = **600** x 1/100 inches)*
All member depths are taken in 1/100 inches. For all "T" sections member depth is the inside to inside dimension.

Flange Width:
*(Example: 1 5/8" = 1.625"≈**162** x 1/100 inches)*
All flange widths are taken in 1/100 inches.

600 S 162 - 54

Style:
*(Example: Stud or Joist Section = **S**)*
Relevant alpha characters utilized by the designation system are:
S = Stud or Joist Sections **T** = Track Sections

Material Thickness:
*(Example: 0.054" = **54** mils; 1 mil = 1/1000 in.)*
Material thickness is the minimum base metal thickness in mils. Minimum base metal thickness represents 95% of the design thickness.

Steel Thickness

Mils	Gauge	Thickness (in) Design	Thickness (in) Minimum[1]
33	20	0.0346	0.0329
43	18	0.0451	0.0428
54	16	0.0566	0.0538
68	14	0.0713	0.0677
97	12	0.1017	0.0966
118	10	0.1242	0.1180

[1] Minimum Thickness represents 95% of the design thickness and is the minimum acceptable thickness delivered to the job site based on Section A3.4 of the 1996 AISI Specification.

Design Stiffening Lip Length

Section	Flange Width	Design Stiffening Lip Length (in)
S137	1-3/8"	0.375
S162	1-5/8"	0.500
S200	2"	0.625
S250	2-1/2"	0.625
S300	3"	1.000
S350	3-1/2"	1.000

Structural Stud Punchouts

Punchouts for structural studs are ovals. These punchouts begin 12" from the lead end and are spaced at 24" o.c. intervals. The last punchout is 12" minimum from the trailing end of the stud. Care should be taken during installation to be sure the studs are oriented in the same direction to facilitate plumbing and electrical installation.

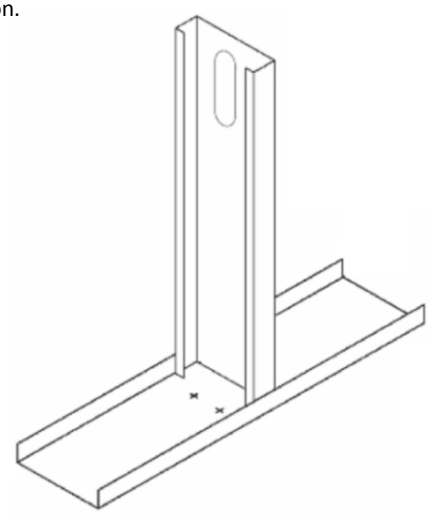

General Notes

1. Physical properties and load tables have been calculated in conformance with the 2001 NASPEC for the Design of Cold-Formed Steel Structural Members, including the 2004 Supplement, and the IBC 2006, unless noted otherwise.
2. All structural framing members have a protective coating conforming to ASTM C 955.
3. Reference ASTM specification A 1003/A 1003 M table 1 for the universe of allowable coatings for light gauge steel framing.
4. Stud/joists are manufactured to custom lengths. Stud/joists are manufactured with punched webs unless otherwise specified at time of order.
5. Track is produced in standard lengths of 10 feet unless a custom track length is indicated. Track is manufactured with unpunched webs.
6. Structural framing members are marked with product information per the requirements of ASTM C 955 section 12.
7. All delivered material must be kept dry, preferably by being stored inside a building under a roof. If it is necessary to store material outside, it must be stacked off the ground, properly supported on a level platform, and fully protected from the weather. Reference ASTM C 754 section 8 and ASTM C 1007 section 4.

LEED Green Building Credits

MR Credit 2: Construction Waste Management – MBA steel framing is 100% recyclable.
MR Credit 4: Recycled Content – MBA steel framing is formed from no less than 25.5% post-consumer and 6.8% pre-consumer recycled content.
MR Credit 5: Regional Materials – MBA has manufacturing facilities in multiple states.

Section Properties

Section Properties Table Notes

1. Web depth for track sections is equal to the nominal height plus 2 times design thickness plus the bend radius.
2. Hems on non-structural track sections are ignored.
3. Effective properties incorporate the strength increase from the cold work of forming as applicable per per NASPEC section A7.2.
4. Tabulated gross properties are based on the full, unreduced section away from punchouts.
5. Effective properties of all 'S' sections based on punched sections. Track sections are considered unpunched.
6. For deflection calculations, use the effective moment of inertia.
7. Where effective properties are not listed for a section at 33 or 50 ksi yield, web depth-to-thickness or flange width-to-thickness limits from the NASPEC are exceeded. Only gross properties are available.

Structural (S) Stud Section Properties

	Design	Gross Properties							Effective Properties (33ksi)				Effective 50ksi				Torsional					
	Thickness	Area	Weight	Ix	Sx	Rx	Iy	Ry	Ix	Sx	Ma	Vag	Ixx	Sxx	Ma	Vag	J x1000	Cw	Xo	m	Ro	β
Section	(in)	(in²)	(lb/ft)	(in⁴)	(in³)	(in)	(in⁴)	(in)	(in⁴)	(in³)	(in-k)	(lb)	(in⁴)	(in³)	(in-k)	(lb)	(in⁴)	(in⁶)	(in)	(in)	(in)	
250S137-33	0.0346	0.197	0.67	0.203	0.163	1.015	0.052	0.515	0.203	0.158	3.11	975					0.079	0.076	-1.141	0.677	1.612	0.499
250S137-43	0.0451	0.255	0.87	0.261	0.208	1.010	0.067	0.511	0.261	0.205	4.53 [2]	1265					0.173	0.096	-1.129	0.670	1.599	0.501
250S137-54	0.0566	0.316	1.07	0.318	0.255	1.004	0.080	0.504	0.318	0.255	5.76 [2]	1553	0.318	0.244	8.22 [2]	2353	0.337	0.115	-1.115	0.663	1.583	0.504
250S137-68	0.0713	0.390	1.33	0.386	0.309	0.994	0.095	0.495	0.386	0.309	7.19 [2]	1891	0.386	0.308	10.65 [2]	2866	0.661	0.138	-1.096	0.653	1.561	0.507
250S162-33	0.0346	0.223	0.76	0.235	0.188	1.027	0.087	0.624	0.235	0.180	3.55	975					0.089	0.146	-1.470	0.859	1.898	0.401
250S162-43	0.0451	0.289	0.98	0.302	0.242	1.022	0.111	0.620	0.302	0.240	5.22 [2]	1265					0.196	0.184	-1.457	0.852	1.885	0.402
250S162-54	0.0566	0.358	1.22	0.370	0.296	1.016	0.135	0.613	0.370	0.296	6.57 [2]	1553	0.370	0.284	9.42 [2]	2353	0.383	0.223	-1.443	0.845	1.868	0.403
250S162-68	0.0713	0.443	1.51	0.450	0.360	1.007	0.162	0.605	0.450	0.360	8.21 [2]	1891	0.450	0.357	12.11 [2]	2866	0.752	0.268	-1.424	0.835	1.846	0.405
350S162-33	0.0346	0.258	0.88	0.508	0.290	1.404	0.098	0.617	0.508	0.257	5.08	1024					0.103	0.277	-1.324	0.796	2.026	0.573
350S162-43	0.0451	0.334	1.14	0.654	0.374	1.400	0.125	0.612	0.654	0.357	7.05	1739					0.227	0.350	-1.312	0.789	2.014	0.575
350S162-54	0.0566	0.415	1.41	0.804	0.460	1.392	0.152	0.606	0.804	0.447	8.83	2253	0.804	0.426	12.74	3372	0.443	0.426	-1.298	0.782	1.998	0.578
350S162-68	0.0713	0.515	1.75	0.985	0.563	1.383	0.184	0.597	0.985	0.551	10.89	2774	0.985	0.549	16.44	4202	0.872	0.514	-1.280	0.772	1.977	0.581
362S137-33	0.0346	0.236	0.80	0.479	0.264	1.424	0.059	0.501	0.479	0.232	4.59	1024					0.094	0.165	-1.003	0.615	1.813	0.694
362S137-43	0.0451	0.306	1.04	0.616	0.340	1.419	0.075	0.497	0.616	0.320	6.32	1739					0.207	0.208	-0.991	0.608	1.801	0.697
362S137-54	0.0566	0.379	1.29	0.756	0.417	1.411	0.091	0.490	0.756	0.402	7.94	2341	0.756	0.381	11.42	3372	0.405	0.251	-0.978	0.601	1.785	0.700
362S137-68	0.0713	0.470	1.60	0.922	0.509	1.401	0.109	0.480	0.922	0.498	9.84	2884	0.922	0.493	14.77	4370	0.797	0.302	-0.959	0.592	1.764	0.704
362S162-33	0.0346	0.262	0.89	0.551	0.304	1.450	0.099	0.616	0.551	0.268	5.29	1024					0.105	0.297	-1.308	0.789	2.048	0.592
362S162-43	0.0451	0.340	1.16	0.710	0.392	1.445	0.127	0.611	0.710	0.372	7.34	1739					0.230	0.376	-1.297	0.782	2.036	0.594
362S162-54	0.0566	0.422	1.44	0.873	0.481	1.438	0.154	0.604	0.873	0.466	9.22	2341	0.873	0.444	13.28	3372	0.451	0.457	-1.283	0.774	2.020	0.597
362S162-68	0.0713	0.524	1.78	1.069	0.590	1.429	0.186	0.596	1.069	0.579	11.43	2884	1.069	0.574	17.18	4370	0.887	0.552	-1.264	0.765	1.998	0.600
362S200-33	0.0346	0.297	1.01	0.648	0.358	1.478	0.177	0.772	0.647	0.294	5.81	1024					0.118	0.577	-1.741	1.030	2.411	0.478
362S200-43	0.0451	0.385	1.31	0.836	0.461	1.474	0.227	0.767	0.836	0.427	8.43	1739					0.261	0.734	-1.729	1.024	2.398	0.480
362S200-54	0.0566	0.479	1.63	1.030	0.568	1.467	0.277	0.761	1.030	0.553	10.93	2341	1.030	0.490	14.66	3372	0.511	0.896	-1.715	1.016	2.382	0.482
362S200-68	0.0713	0.595	2.02	1.265	0.698	1.458	0.337	0.753	1.265	0.687	13.58	2884	1.265	0.666	19.95	4370	1.008	1.089	-1.696	1.006	2.360	0.484
400S137-33	0.0346	0.249	0.85	0.603	0.301	1.556	0.061	0.496	0.603	0.259	5.12	976					0.099	0.204	-0.965	0.597	1.897	0.741
400S137-43	0.0451	0.323	1.10	0.776	0.388	1.551	0.078	0.491	0.776	0.359	7.09	1739					0.219	0.257	-0.954	0.591	1.885	0.744
400S137-54	0.0566	0.401	1.36	0.953	0.477	1.542	0.094	0.484	0.953	0.453	8.96	2603	0.953	0.428	12.82	3372	0.428	0.311	-0.940	0.583	1.870	0.747
400S137-68	0.0713	0.497	1.69	1.165	0.582	1.531	0.112	0.475	1.165	0.567	11.21	3215	1.165	0.558	16.70	4871	0.842	0.375	-0.922	0.574	1.849	0.751
400S162-33	0.0346	0.275	0.94	0.692	0.346	1.586	0.103	0.611	0.692	0.299	5.91	976					0.110	0.363	-1.263	0.768	2.118	0.644
400S162-43	0.0451	0.357	1.21	0.892	0.446	1.581	0.131	0.606	0.892	0.417	8.23	1739					0.242	0.460	-1.252	0.761	2.106	0.647
400S162-54	0.0566	0.443	1.51	1.098	0.549	1.574	0.159	0.600	1.098	0.526	10.39	2603	1.098	0.498	14.90	3372	0.473	0.560	-1.238	0.754	2.090	0.649
400S162-68	0.0713	0.550	1.87	1.346	0.673	1.564	0.192	0.591	1.346	0.658	13.00	3215	1.346	0.648	19.41	4871	0.933	0.677	-1.220	0.745	2.069	0.653
400S200-33	0.0346	0.310	1.05	0.812	0.406	1.619	0.183	0.769	0.812	0.328	6.49	976					0.124	0.697	-1.688	1.007	2.462	0.530
400S200-43	0.0451	0.402	1.37	1.047	0.524	1.615	0.235	0.764	1.047	0.478	9.45	1739					0.272	0.886	-1.676	1.000	2.449	0.532
400S200-54	0.0566	0.500	1.70	1.292	0.646	1.608	0.287	0.758	1.292	0.623	12.30	2603	1.292	0.549	16.43	3372	0.534	1.083	-1.662	0.993	2.433	0.534
400S200-68	0.0713	0.622	2.12	1.589	0.795	1.599	0.349	0.750	1.589	0.780	15.40	3215	1.589	0.751	22.48	4871	1.054	1.318	-1.643	0.983	2.412	0.536
550S162-33	0.0346	0.327	1.11	1.458	0.530	2.112	0.113	0.589	1.458	0.512	10.11	699					0.130	0.713	-1.114	0.697	2.459	0.795
550S162-43	0.0451	0.424	1.44	1.883	0.685	2.107	0.145	0.584	1.883	0.681	14.79 [2]	1550					0.288	0.905	-1.103	0.691	2.448	0.797
550S162-54	0.0566	0.528	1.80	2.324	0.845	2.098	0.176	0.577	2.324	0.845	18.76 [2]	2739	2.324	0.811	26.86 [2]	3093	0.564	1.105	-1.090	0.684	2.434	0.800
550S162-68	0.0713	0.657	2.24	2.861	1.040	2.086	0.212	0.568	2.861	1.040	23.72 [2]	4347	2.861	1.031	34.94 [2]	5350	1.114	1.342	-1.072	0.675	2.414	0.803
600S137-33	0.0346	0.318	1.08	1.582	0.527	2.229	0.069	0.464	1.548	0.455	8.98	638					0.127	0.500	-0.807	0.519	2.416	0.889
600S137-43	0.0451	0.413	1.41	2.042	0.681	2.223	0.087	0.459	2.041	0.645	12.74	1416					0.280	0.633	-0.796	0.513	2.406	0.890
600S137-54	0.0566	0.514	1.75	2.518	0.839	2.213	0.105	0.452	2.518	0.832	16.44	2739	2.518	0.777	23.26	2823	0.549	0.769	-0.784	0.506	2.391	0.893
600S137-68	0.0713	0.640	2.18	3.094	1.031	2.200	0.125	0.443	3.094	1.031	24.05 [2]	4347	3.094	1.030	30.84	5350	1.084	0.930	-0.768	0.497	2.371	0.895
600S137-97	0.1017	0.889	3.03	4.188	1.396	2.170	0.159	0.422	4.188	1.396	34.48 [2]	6911	4.188	1.396	50.80 [2]	10472	3.066	1.216	-0.734	0.480	2.330	0.901
600S162-33	0.0346	0.344	1.17	1.793	0.598	2.282	0.116	0.581	1.793	0.577	11.41	638					0.137	0.861	-1.072	0.677	2.587	0.828
600S162-43	0.0451	0.447	1.52	2.316	0.772	2.276	0.148	0.576	2.316	0.767	16.68 [2]	1416					0.303	1.095	-1.062	0.670	2.577	0.830
600S162-54	0.0566	0.556	1.89	2.860	0.953	2.267	0.180	0.570	2.860	0.953	21.17 [2]	2739	2.860	0.916	30.33 [2]	2823	0.594	1.337	-1.049	0.663	2.562	0.832
600S162-68	0.0713	0.693	2.36	3.525	1.175	2.255	0.218	0.560	3.525	1.175	26.79 [2]	4347	3.525	1.164	39.47 [2]	5350	1.174	1.626	-1.032	0.655	2.543	0.835
600S162-97	0.1017	0.966	3.29	4.797	1.599	2.229	0.283	0.541	4.797	1.599	38.37 [2]	6911	4.797	1.599	56.73 [2]	10472	3.329	2.153	-0.997	0.636	2.501	0.841

[1] Web-height to thickness ratio exceeds 200. Web Stiffeners are required at all support points and concentrated loads.
[2] Allowable moment includes cold-work of forming.

Section Properties

Structural (S) Stud Section Properties (cont'd)

	Design	Gross Properties							Effective Properties (33ksi)				Effective 50ksi				Torsional					
	Thickness	Area	Weight	Ix	Sx	Rx	Iy	Ry	Ix	Sx	Ma	Vag	Ixx	Sxx	Ma	Vag	J^{x1000}	Cw	Xo	m	Ro	β
Section	(in)	(in^2)	(lb/ft)	(in^4)	(in^3)	(in)	(in^4)	(in)	(in^4)	(in^3)	(in-k)	(lb)	(in^4)	(in^3)	(in-k)	(lb)	(in^4)	(in^6)	(in)	(in)	(in)	
600S200-33	0.0346	0.379	1.29	2.075	0.692	2.340	0.209	0.743	2.058	0.621	12.28[2]	638					0.151	1.593	-1.457	0.901	2.855	0.740
600S200-43	0.0451	0.492	1.67	2.683	0.894	2.335	0.268	0.739	2.683	0.873	17.24	1416					0.334	2.033	-1.446	0.894	2.844	0.742
600S200-54	0.0566	0.613	2.09	3.319	1.106	2.327	0.328	0.732	3.319	1.106	24.07[2]	2739	3.319	1.015	30.40	2823	0.655	2.493	-1.432	0.887	2.829	0.744
600S200-68	0.0713	0.764	2.60	4.101	1.367	2.316	0.400	0.723	4.101	1.367	30.42[2]	4347	4.101	1.317	43.71[2]	5350	1.295	3.047	-1.415	0.878	2.809	0.746
600S200-97	0.1017	1.067	3.63	5.612	1.871	2.293	0.530	0.705	5.612	1.871	43.49[2]	6911	5.612	1.871	64.53[2]	10472	3.679	4.080	-1.378	0.859	2.767	0.752
600S250-43	0.0451	0.537	1.83	3.082	1.027	2.396	0.458	0.923	3.082	0.918	18.14	1416					0.364	3.411	-1.874	1.136	3.179	0.652
600S250-54	0.0566	0.670	2.28	3.819	1.273	2.388	0.562	0.917	3.819	1.159	22.90	2739	3.766	1.069	32.00	2823	0.715	4.194	-1.860	1.129	3.163	0.654
600S250-68	0.0713	0.836	2.84	4.727	1.576	2.378	0.688	0.908	4.727	1.508	32.82[2]	4347	4.723	1.386	41.49	5350	1.416	5.145	-1.842	1.119	3.142	0.656
600S250-97	0.1017	1.169	3.98	6.496	2.165	2.357	0.923	0.889	6.496	2.161	48.81[2]	6911	6.496	2.063	69.38[2]	10472	4.030	6.947	-1.803	1.100	3.098	0.661
800S137-33 [1]	0.0346	0.388	1.32	3.198	0.799	2.873	0.073	0.435	2.998	0.622	12.30	474					0.155	0.957	-0.696	0.460	2.987	0.946
800S137-43	0.0451	0.503	1.71	4.134	1.033	2.866	0.093	0.430	4.001	0.896	17.70	1051					0.341	1.214	-0.687	0.454	2.978	0.947
800S137-54	0.0566	0.627	2.13	5.110	1.277	2.855	0.112	0.423	5.077	1.179	23.29	2091	4.974	1.083	32.42	2091	0.670	1.478	-0.676	0.448	2.964	0.948
800S137-68	0.0713	0.782	2.66	6.303	1.576	2.839	0.134	0.414	6.303	1.541	30.45	4221	6.285	1.468	43.96	4221	1.325	1.789	-0.661	0.440	2.944	0.950
800S137-97	0.1017	1.093	3.72	8.597	2.149	2.805	0.169	0.394	8.597	2.149	53.09[2]	8843	8.597	2.149	64.35	10885	3.767	2.349	-0.630	0.423	2.902	0.953
800S162-33 [1]	0.0346	0.413	1.41	3.582	0.896	2.943	0.125	0.550	3.384	0.710	14.03	474					0.165	1.630	-0.936	0.607	3.137	0.911
800S162-43	0.0451	0.537	1.83	4.633	1.158	2.937	0.160	0.546	4.500	1.019	20.14	1051					0.364	2.076	-0.926	0.601	3.128	0.912
800S162-54	0.0566	0.670	2.28	5.736	1.434	2.927	0.194	0.539	5.702	1.334	26.36	2091	5.600	1.229	36.79	2091	0.715	2.539	-0.914	0.594	3.113	0.914
800S162-68	0.0713	0.836	2.84	7.089	1.772	2.913	0.235	0.530	7.089	1.737	34.32	4221	7.070	1.663	49.80	4221	1.416	3.093	-0.899	0.586	3.094	0.916
800S162-97	0.1017	1.169	3.98	9.713	2.428	2.883	0.305	0.510	9.713	2.428	58.27[2]	8843	9.713	2.428	72.70	10885	4.030	4.114	-0.866	0.568	3.053	0.919
800S200-33 [1]	0.0346	0.448	1.52	4.096	1.024	3.023	0.227	0.712	4.096	0.816	16.12	474					0.179	2.971	-1.288	0.817	3.363	0.853
800S200-43	0.0451	0.582	1.98	5.302	1.325	3.018	0.292	0.708	5.302	1.293	25.54	1051					0.395	3.797	-1.277	0.811	3.353	0.855
800S200-54	0.0566	0.726	2.47	6.573	1.643	3.009	0.357	0.701	6.573	1.643	35.75[2]	2091	6.573	1.499	44.87	2091	0.775	4.663	-1.265	0.804	3.338	0.856
800S200-68	0.0713	0.907	3.09	8.140	2.035	2.996	0.435	0.692	8.140	2.035	45.29[2]	4221	8.140	1.964	65.21[2]	4221	1.537	5.712	-1.248	0.796	3.319	0.859
800S200-97	0.1017	1.271	4.32	11.203	2.801	2.969	0.576	0.673	11.203	2.801	65.12[2]	8843	11.203	2.801	96.63[2]	10885	4.381	7.684	-1.214	0.777	3.278	0.863
800S250-43	0.0451	0.627	2.13	6.015	1.504	3.097	0.500	0.893	6.015	1.313	25.95	1051					0.425	6.374	-1.675	1.043	3.632	0.787
800S250-54	0.0566	0.783	2.66	7.465	1.866	3.088	0.614	0.886	7.465	1.712	33.82	2091	7.378	1.525	45.66	2091	0.836	7.850	-1.661	1.036	3.617	0.789
800S250-68	0.0713	0.978	3.33	9.261	2.315	3.077	0.752	0.877	9.261	2.220	48.33[2]	4221	9.240	2.059	61.65	4221	1.658	9.652	-1.644	1.027	3.597	0.791
800S250-97	0.1017	1.372	4.67	12.789	3.197	3.053	1.009	0.857	12.789	3.191	72.07[2]	8843	12.789	3.054	102.70[2]	10885	4.731	13.091	-1.607	1.008	3.555	0.796
1000S162-43 [1]	0.0451	0.627	2.13	8.025	1.605	3.577	0.168	0.518	7.523	1.302	25.74	836					0.425	3.430	-0.823	0.545	3.707	0.951
1000S162-54	0.0566	0.783	2.66	9.950	1.990	3.565	0.204	0.511	9.627	1.722	34.02	1661	9.391	1.572	47.07	1661	0.836	4.198	-0.812	0.538	3.692	0.952
1000S162-68	0.0713	0.978	3.33	12.325	2.465	3.550	0.246	0.502	12.256	2.276	44.98	3345	11.978	2.154	64.51	3345	1.658	5.121	-0.798	0.531	3.673	0.953
1000S162-97	0.1017	1.372	4.67	16.967	3.393	3.516	0.320	0.483	16.967	3.393	67.06	8843	16.967	3.269	97.89	9864	4.731	6.827	-0.768	0.514	3.631	0.955
1000S200-43 [1]	0.0451	0.672	2.29	9.085	1.817	3.676	0.309	0.677	8.602	1.470	29.05	836					0.456	6.236	-1.147	0.743	3.910	0.914
1000S200-54	0.0566	0.839	2.86	11.278	2.256	3.666	0.378	0.671	10.953	1.984	39.20	1661	10.769	1.705	51.05	1661	0.896	7.665	-1.135	0.737	3.896	0.915
1000S200-68	0.0713	1.050	3.57	13.994	2.799	3.652	0.460	0.662	13.920	2.607	51.51	3345	13.665	2.420	72.46	3345	1.779	9.401	-1.120	0.729	3.876	0.917
1000S200-97	0.1017	1.474	5.02	19.336	3.867	3.622	0.609	0.643	19.336	3.867	76.42	8843	19.336	3.741	112.00	9864	5.082	12.679	-1.088	0.711	3.836	0.920
1000S250-43 [1]	0.0451	0.717	2.44	10.203	2.041	3.771	0.531	0.860	10.203	1.617	31.95	836					0.486	10.481	-1.518	0.965	4.155	0.867
1000S250-54	0.0566	0.896	3.05	12.677	2.535	3.762	0.653	0.854	12.677	2.277	44.99	1661	12.660	1.879	56.26	1661	0.957	12.922	-1.505	0.958	4.140	0.868
1000S250-68	0.0713	1.121	3.81	15.751	3.150	3.749	0.799	0.844	15.751	3.028	65.93[2]	3345	15.741	2.768	82.89	3345	1.899	15.909	-1.488	0.950	4.121	0.870
1000S250-97	0.1017	1.576	5.36	21.827	4.365	3.722	1.072	0.825	21.827	4.357	98.41[2]	8843	21.827	4.181	140.63[2]	9864	5.433	21.632	-1.454	0.932	4.080	0.873
1200S162-54 [1]	0.0566	0.896	3.05	15.730	2.622	4.190	0.212	0.486	14.743	2.109	41.68	1377	14.298	1.914	57.31	1377	0.957	6.340	-0.732	0.493	4.281	0.971
1200S162-68	0.0713	1.121	3.81	19.518	3.253	4.173	0.255	0.477	18.955	2.817	55.66	2771	18.390	2.645	79.19	2771	1.899	7.739	-0.719	0.485	4.261	0.972
1200S162-97	0.1017	1.576	5.36	26.966	4.494	4.137	0.331	0.459	26.966	4.327	85.51	8147	26.735	4.091	122.49	8147	5.433	10.331	-0.691	0.470	4.219	0.973
1200S200-54 [1]	0.0566	0.953	3.24	17.662	2.944	4.306	0.393	0.643	16.678	2.425	47.93	1377	16.334	2.073	62.07	1377	1.017	11.550	-1.032	0.681	4.474	0.947
1200S200-68	0.0713	1.192	4.06	21.947	3.658	4.291	0.479	0.634	21.376	3.215	63.54	2771	20.864	2.963	88.71	2771	2.020	14.176	-1.017	0.673	4.455	0.948
1200S200-97	0.1017	1.677	5.71	30.417	5.069	4.258	0.635	0.615	30.417	4.899	96.81	8147	30.175	4.660	139.51	8147	5.783	19.150	-0.987	0.656	4.414	0.950
1200S250-54 [1]	0.0566	1.009	3.43	19.681	3.280	4.416	0.683	0.823	18.832	2.482	49.05	1377	18.433	2.149	64.34	1377	1.078	19.505	-1.378	0.892	4.699	0.914
1200S250-68	0.0713	1.263	4.30	24.484	4.081	4.402	0.836	0.813	23.963	3.496	69.08	2771	23.575	3.007	90.04	2771	2.141	24.034	-1.362	0.884	4.679	0.915
1200S250-97	0.1017	1.779	6.05	34.016	5.669	4.373	1.121	0.794	34.016	5.496	108.60	8147	33.835	5.037	150.82	8147	6.134	32.734	-1.329	0.867	4.639	0.918

[1] Web-height to thickness ratio exceeds 200. Web Stiffeners are required at all support points and concentrated loads.
[2] Allowable moment includes cold-work of forming.

Section Properties

Section Properties Table Notes

1. Web depth for track sections is equal to the nominal height plus 2 times design thickness plus the bend radius.
2. Hems on non-structural track sections are ignored.
3. Effective properties incorporate the strength increase from the cold work of forming as applicable per per NASPEC section A7.2.
4. Tabulated gross properties are based on the full, unreduced section away from punchouts.
5. Effective properties of all 'S' sections based on punched sections. Track sections are considered unpunched.
6. For deflection calculations, use the effective moment of inertia.
7. Where effective properties are not listed for a section at 33 or 50 ksi yield, web depth-to-thickness or flange width-to-thickness limits from the NASPEC are exceeded. Only gross properties are available.

Structural (T) Track Section Properties

	Design	Gross Properties							Effective Properties (33ksi)				Effective 50ksi				Torsional					
	Thickness	Area	Weight	Ix	Sx	Rx	Iy	Ry	Ix	Sx	Ma	Vag	Ixx	Sxx	Ma	Va	J^{x1000}	Cw	Xo	m	Ro	β
Section	(in)	(in^2)	(lb/ft)	(in^4)	(in^3)	(in)	(in^4)	(in)	(in^4)	(in^3)	(in-k)	(lb)	(in^4)	(in^3)	(in-k)	(lb)	(in^4)	(in^6)	(in)	(in)	(in)	
250T125-33	0.0346	0.173	0.59	0.192	0.145	1.054	0.027	0.397	0.166	0.103	2.03	1024					0.069	0.033	-0.760	0.456	1.358	0.687
250T125-43	0.0451	0.225	0.77	0.250	0.188	1.055	0.035	0.395	0.231	0.147	2.91	1356					0.153	0.042	-0.755	0.453	1.356	0.690
250T125-54	0.0566	0.282	0.96	0.318	0.236	1.062	0.043	0.392	0.310	0.203	4.01	1692	0.297	0.188	5.64	2563	0.301	0.054	-0.749	0.449	1.357	0.696
250T125-68	0.0713	0.355	1.21	0.408	0.297	1.072	0.054	0.389	0.408	0.281	5.56	2111	0.402	0.262	7.85	3199	0.602	0.069	-0.740	0.444	1.360	0.704
250T150-33	0.0346	0.190	0.65	0.221	0.167	1.079	0.045	0.485	0.179	0.107	2.11	1024					0.076	0.054	-0.973	0.573	1.532	0.596
250T150-43	0.0451	0.248	0.84	0.289	0.217	1.080	0.058	0.483	0.252	0.154	3.03	1356					0.168	0.070	-0.968	0.570	1.529	0.599
250T150-54	0.0566	0.311	1.06	0.368	0.273	1.088	0.072	0.481	0.342	0.213	4.22	1692	0.325	0.197	5.89	2563	0.332	0.089	-0.961	0.566	1.529	0.605
250T150-68	0.0713	0.391	1.33	0.472	0.344	1.099	0.089	0.478	0.465	0.299	5.92	2111	0.445	0.276	8.27	3199	0.663	0.114	-0.953	0.561	1.531	0.613
250T200-33	0.0346	0.225	0.76	0.280	0.212	1.117	0.097	0.658	0.203	0.112	2.22	1024					0.090	0.118	-1.418	0.813	1.921	0.455
250T200-43	0.0451	0.293	1.00	0.366	0.275	1.118	0.126	0.657	0.288	0.163	3.21	1356					0.198	0.153	-1.413	0.810	1.918	0.457
250T200-54	0.0566	0.367	1.25	0.466	0.346	1.127	0.157	0.654	0.396	0.228	4.51	1692	0.371	0.209	6.25	2563	0.392	0.195	-1.405	0.806	1.917	0.462
250T200-68	0.0713	0.462	1.57	0.600	0.437	1.139	0.196	0.652	0.548	0.324	6.41	2111	0.517	0.296	8.86	3199	0.783	0.251	-1.396	0.800	1.916	0.469
350T125-33	0.0346	0.207	0.71	0.405	0.222	1.397	0.030	0.379	0.354	0.165	3.27	1024					0.083	0.070	-0.668	0.414	1.594	0.824
350T125-43	0.0451	0.270	0.92	0.528	0.288	1.397	0.038	0.377	0.490	0.233	4.61	1739					0.183	0.090	-0.663	0.412	1.592	0.826
350T125-54	0.0566	0.339	1.15	0.668	0.361	1.404	0.048	0.375	0.651	0.317	6.26	2392	0.626	0.297	8.89	3372	0.362	0.114	-0.658	0.408	1.595	0.830
350T125-68	0.0713	0.427	1.45	0.851	0.454	1.412	0.059	0.372	0.851	0.433	8.55	2994	0.839	0.407	12.18	4536	0.723	0.144	-0.650	0.403	1.599	0.835
350T150-33	0.0346	0.225	0.76	0.461	0.253	1.432	0.049	0.469	0.382	0.171	3.39	1024					0.090	0.114	-0.866	0.527	1.738	0.752
350T150-43	0.0451	0.293	1.00	0.601	0.328	1.433	0.064	0.467	0.531	0.243	4.80	1739					0.198	0.148	-0.861	0.525	1.736	0.754
350T150-54	0.0566	0.367	1.25	0.761	0.412	1.440	0.079	0.465	0.712	0.332	6.57	2392	0.679	0.310	9.28	3372	0.392	0.187	-0.855	0.521	1.738	0.758
350T150-68	0.0713	0.462	1.57	0.972	0.518	1.450	0.099	0.462	0.957	0.459	9.07	2994	0.919	0.428	12.81	4536	0.783	0.238	-0.847	0.516	1.741	0.763
350T200-33	0.0346	0.259	0.88	0.574	0.315	1.487	0.108	0.647	0.428	0.181	3.57	1024					0.103	0.249	-1.285	0.761	2.069	0.614
350T200-43	0.0451	0.338	1.15	0.749	0.409	1.489	0.140	0.645	0.600	0.257	5.09	1739					0.229	0.323	-1.280	0.758	2.066	0.616
350T200-54	0.0566	0.424	1.44	0.949	0.513	1.496	0.175	0.642	0.814	0.355	7.01	2392	0.770	0.329	9.85	3372	0.453	0.409	-1.273	0.754	2.067	0.621
350T200-68	0.0713	0.534	1.82	1.213	0.647	1.508	0.218	0.639	1.112	0.496	9.80	2994	1.054	0.458	13.71	4536	0.904	0.522	-1.264	0.749	2.069	0.626
362T125-33	0.0346	0.212	0.72	0.438	0.232	1.438	0.030	0.377	0.384	0.174	3.44	1024					0.085	0.076	-0.658	0.409	1.626	0.836
362T125-43	0.0451	0.276	0.94	0.571	0.302	1.439	0.039	0.375	0.531	0.245	4.84	1739					0.187	0.098	-0.654	0.407	1.625	0.838
362T125-54	0.0566	0.346	1.18	0.723	0.378	1.445	0.048	0.373	0.705	0.332	6.57	2480	0.678	0.312	9.34	3372	0.369	0.123	-0.648	0.404	1.627	0.841
362T125-68	0.0713	0.436	1.48	0.921	0.475	1.454	0.060	0.370	0.921	0.453	8.95	3104	0.907	0.427	12.78	4703	0.738	0.156	-0.641	0.399	1.631	0.846
362T150-33	0.0346	0.229	0.78	0.499	0.264	1.475	0.050	0.467	0.414	0.180	3.56	1024					0.091	0.124	-0.854	0.522	1.767	0.766
362T150-43	0.0451	0.298	1.02	0.650	0.343	1.476	0.064	0.465	0.574	0.255	5.04	1739					0.202	0.160	-0.850	0.519	1.766	0.768
362T150-54	0.0566	0.374	1.27	0.823	0.431	1.483	0.080	0.462	0.769	0.349	6.89	2480	0.735	0.325	9.74	3372	0.400	0.202	-0.844	0.516	1.768	0.772
362T150-68	0.0713	0.471	1.60	1.050	0.542	1.492	0.099	0.459	1.034	0.480	9.49	3104	0.993	0.449	13.43	4703	0.799	0.257	-0.836	0.511	1.771	0.777
362T200-33	0.0346	0.264	0.90	0.619	0.328	1.532	0.110	0.645	0.464	0.190	3.76	1024					0.105	0.269	-1.270	0.754	2.092	0.631
362T200-43	0.0451	0.343	1.17	0.808	0.427	1.534	0.142	0.643	0.649	0.270	5.34	1739					0.233	0.350	-1.265	0.752	2.090	0.633
362T200-54	0.0566	0.431	1.47	1.024	0.536	1.541	0.177	0.640	0.879	0.372	7.35	2480	0.832	0.345	10.34	3372	0.460	0.442	-1.259	0.748	2.091	0.637
362T200-68	0.0713	0.543	1.85	1.307	0.675	1.552	0.221	0.638	1.199	0.519	10.26	3104	1.138	0.480	14.37	4703	0.919	0.564	-1.250	0.743	2.093	0.643
400T125-33	0.0346	0.225	0.76	0.549	0.265	1.563	0.031	0.371	0.484	0.201	3.97	940					0.090	0.095	-0.630	0.396	1.725	0.867
400T125-43	0.0451	0.293	1.00	0.716	0.344	1.563	0.040	0.369	0.666	0.282	5.57	1739					0.198	0.122	-0.626	0.394	1.724	0.868
400T125-54	0.0566	0.367	1.25	0.904	0.431	1.569	0.049	0.366	0.882	0.381	7.53	2739	0.849	0.359	10.74	3372	0.392	0.154	-0.621	0.390	1.727	0.871
400T125-68	0.0713	0.462	1.57	1.150	0.541	1.577	0.061	0.363	1.150	0.517	10.22	3435	1.134	0.488	14.62	5205	0.783	0.194	-0.614	0.386	1.731	0.874
400T150-33	0.0346	0.242	0.82	0.622	0.300	1.603	0.051	0.460	0.519	0.208	4.12	940					0.097	0.155	-0.821	0.507	1.859	0.805
400T150-43	0.0451	0.315	1.07	0.811	0.390	1.604	0.066	0.458	0.719	0.293	5.80	1739					0.214	0.200	-0.817	0.504	1.857	0.807
400T150-54	0.0566	0.396	1.35	1.025	0.489	1.610	0.082	0.456	0.960	0.399	7.89	2739	0.918	0.374	11.19	3372	0.422	0.252	-0.811	0.501	1.860	0.810
400T150-68	0.0713	0.498	1.69	1.306	0.615	1.619	0.102	0.453	1.286	0.548	10.82	3435	1.237	0.513	15.35	5205	0.844	0.320	-0.804	0.496	1.864	0.814
400T200-33	0.0346	0.277	0.94	0.768	0.371	1.666	0.113	0.639	0.581	0.220	4.34	940					0.110	0.336	-1.229	0.737	2.166	0.678
400T200-43	0.0451	0.360	1.23	1.002	0.482	1.668	0.146	0.637	0.811	0.311	6.14	1739					0.244	0.436	-1.224	0.734	2.164	0.680
400T200-54	0.0566	0.452	1.54	1.268	0.604	1.675	0.182	0.635	1.093	0.426	8.42	2739	1.037	0.397	11.88	3372	0.483	0.551	-1.217	0.730	2.165	0.684
400T200-68	0.0713	0.569	1.94	1.617	0.761	1.685	0.227	0.632	1.485	0.591	11.68	3435	1.412	0.549	16.42	5205	0.965	0.702	-1.209	0.725	2.168	0.689

[1] Web-height to thickness ratio exceeds 200. Web Stiffeners are required at all support points and concentrated loads.
[2] Allowable moment includes cold-work of forming.

Section Properties

Structural (T) Track Section Properties (cont'd)

	Design	Gross Properties							Effective Properties (33ksi)				Effective 50ksi				Torsional					
	Thickness	Area	Weight	Ix	Sx	Rx	Iy	Ry	Ix	Sx	Ma	Vag	Ixx	Sxx	Ma	Va	J^{x1000}	Cw	Xo	m	Ro	β
Section	(in)	(in^2)	(lb/ft)	(in^4)	(in^3)	(in)	(in^4)	(in)	(in^4)	(in^3)	(in-k)	(lb)	(in^4)	(in^3)	(in-k)	(lb)	(in^4)	(in^6)	(in)	(in)	(in)	
550T125-33	0.0346	0.277	0.94	1.159	0.410	2.046	0.033	0.346	1.029	0.270	5.33	680					0.110	0.195	-0.541	0.350	2.145	0.936
550T125-43	0.0451	0.360	1.23	1.510	0.533	2.047	0.043	0.344	1.428	0.416	8.23	1504					0.244	0.252	-0.537	0.348	2.144	0.937
550T125-54	0.0566	0.452	1.54	1.903	0.668	2.052	0.053	0.342	1.862	0.597	11.80	2739	1.811	0.535	16.01	2980	0.483	0.315	-0.532	0.345	2.147	0.939
550T125-68	0.0713	0.569	1.94	2.412	0.839	2.058	0.066	0.339	2.412	0.807	15.95	4347	2.379	0.769	23.02	5350	0.965	0.397	-0.526	0.341	2.152	0.940
550T150-33	0.0346	0.294	1.00	1.295	0.459	2.099	0.055	0.434	1.115	0.310	6.12	680					0.117	0.320	-0.714	0.455	2.259	0.900
550T150-43	0.0451	0.383	1.30	1.688	0.596	2.099	0.072	0.432	1.516	0.468	9.25	1504					0.260	0.414	-0.709	0.452	2.258	0.901
550T150-54	0.0566	0.480	1.63	2.128	0.747	2.105	0.089	0.430	2.005	0.628	12.41	2739	1.928	0.595	17.81	2980	0.513	0.519	-0.704	0.449	2.261	0.903
550T150-68	0.0713	0.605	2.06	2.699	0.939	2.112	0.110	0.427	2.660	0.850	16.80	4347	2.569	0.804	24.07	5350	1.025	0.655	-0.698	0.445	2.265	0.905
550T200-33	0.0346	0.329	1.12	1.567	0.555	2.184	0.123	0.613	1.246	0.307	6.06	680					0.131	0.694	-1.088	0.674	2.516	0.813
550T200-43	0.0451	0.428	1.46	2.043	0.722	2.185	0.160	0.611	1.690	0.495	9.79	1504					0.290	0.900	-1.083	0.671	2.514	0.814
550T200-54	0.0566	0.537	1.83	2.578	0.905	2.191	0.199	0.609	2.253	0.669	13.21	2739	2.153	0.630	18.86	2980	0.573	1.133	-1.077	0.668	2.517	0.817
550T200-68	0.0713	0.676	2.30	3.274	1.139	2.200	0.248	0.606	3.027	0.914	18.06	4347	2.894	0.857	25.67	5350	1.146	1.434	-1.070	0.663	2.521	0.820
600T125-33	0.0346	0.294	1.00	1.428	0.465	2.204	0.034	0.339	1.258	0.297	5.87	622					0.117	0.238	-0.516	0.337	2.289	0.949
600T125-43	0.0451	0.383	1.30	1.861	0.604	2.205	0.044	0.337	1.768	0.461	9.11	1377					0.260	0.307	-0.513	0.335	2.288	0.950
600T125-54	0.0566	0.480	1.63	2.344	0.756	2.209	0.054	0.335	2.299	0.666	13.15	2728	2.241	0.592	17.73	2728	0.513	0.384	-0.508	0.332	2.291	0.951
600T125-68	0.0713	0.605	2.06	2.969	0.950	2.215	0.067	0.332	2.969	0.916	18.09	4347	2.934	0.858	25.69	5350	1.025	0.483	-0.503	0.329	2.296	0.952
600T125-97	0.1017	0.862	2.93	4.281	1.347	2.228	0.092	0.326	4.281	1.347	30.43[2]	7359	4.281	1.347	40.33	10885	2.973	0.685	-0.491	0.321	2.305	0.955
600T150-33	0.0346	0.311	1.06	1.590	0.517	2.260	0.057	0.426	1.334	0.303	5.99	622					0.124	0.390	-0.684	0.439	2.399	0.919
600T150-43	0.0451	0.405	1.38	2.072	0.673	2.261	0.073	0.424	1.890	0.474	9.36	1377					0.275	0.504	-0.680	0.437	2.398	0.920
600T150-54	0.0566	0.509	1.73	2.611	0.843	2.266	0.091	0.422	2.473	0.689	13.62	2728	2.400	0.609	18.24	2728	0.543	0.632	-0.675	0.434	2.401	0.921
600T150-68	0.0713	0.641	2.18	3.309	1.059	2.273	0.113	0.419	3.262	0.963	19.03	4347	3.162	0.891	26.68	5350	1.086	0.797	-0.669	0.430	2.406	0.923
600T150-97	0.1017	0.913	3.11	4.778	1.504	2.288	0.156	0.413	4.778	1.504	29.71	7359	4.778	1.444	43.23	10885	3.148	1.138	-0.656	0.421	2.415	0.926
600T200-33	0.0346	0.346	1.18	1.913	0.622	2.352	0.126	0.604	1.542	0.333	6.59	622					0.138	0.847	-1.048	0.655	2.645	0.843
600T200-43	0.0451	0.451	1.53	2.494	0.809	2.353	0.163	0.602	2.076	0.565	11.16	1377					0.305	1.098	-1.044	0.652	2.643	0.844
600T200-54	0.0566	0.565	1.92	3.145	1.015	2.359	0.203	0.600	2.759	0.759	15.00	2728	2.641	0.717	21.48	2728	0.604	1.381	-1.038	0.649	2.646	0.846
600T200-68	0.0713	0.712	2.42	3.990	1.277	2.367	0.254	0.597	3.696	1.034	20.42	4347	3.540	0.973	29.12	5350	1.206	1.746	-1.031	0.644	2.650	0.849
600T200-97	0.1017	1.015	3.45	5.773	1.816	2.385	0.354	0.591	5.758	1.667	32.95	7359	5.558	1.568	46.94	10885	3.499	2.510	-1.016	0.635	2.659	0.854
800T125-33[1]	0.0346	0.363	1.24	2.895	0.711	2.824	0.036	0.313	2.441	0.407	8.03	465					0.145	0.456	-0.439	0.294	2.875	0.977
800T125-43	0.0451	0.473	1.61	3.773	0.924	2.824	0.046	0.311	3.484	0.640	12.65	1030					0.321	0.589	-0.436	0.292	2.874	0.977
800T125-54	0.0566	0.594	2.02	4.745	1.158	2.827	0.057	0.309	4.668	0.940	18.58	2039	4.426	0.824	24.66	2039	0.634	0.735	-0.432	0.289	2.877	0.977
800T125-68	0.0713	0.748	2.54	5.998	1.454	2.833	0.070	0.306	5.998	1.356	26.80	4087	5.956	1.216	36.39	4087	1.267	0.920	-0.427	0.286	2.881	0.978
800T125-97	0.1017	1.066	3.63	8.613	2.062	2.843	0.096	0.301	8.613	2.062	40.74	8843	8.613	2.062	61.72	10885	3.674	1.296	-0.417	0.279	2.889	0.979
800T150-33[1]	0.0346	0.380	1.29	3.180	0.781	2.891	0.060	0.397	2.569	0.414	8.18	465					0.152	0.751	-0.588	0.388	2.977	0.961
800T150-43	0.0451	0.496	1.69	4.144	1.015	2.891	0.077	0.395	3.689	0.655	12.95	1030					0.336	0.972	-0.584	0.386	2.976	0.961
800T150-54	0.0566	0.622	2.12	5.214	1.272	2.896	0.096	0.393	4.976	0.969	19.15	2039	4.692	0.844	25.27	2039	0.664	1.215	-0.580	0.383	2.979	0.962
800T150-68	0.0713	0.783	2.67	6.594	1.599	2.902	0.119	0.390	6.527	1.412	27.91	4087	6.361	1.255	37.58	4087	1.327	1.526	-0.575	0.379	2.984	0.963
800T150-97	0.1017	1.116	3.80	9.479	2.269	2.914	0.165	0.384	9.479	2.269	44.83	8843	9.479	2.192	65.62	10885	3.849	2.162	-0.564	0.372	2.993	0.965
800T200-33[1]	0.0346	0.415	1.41	3.749	0.921	3.005	0.135	0.571	2.788	0.424	8.37	465					0.166	1.638	-0.917	0.589	3.194	0.918
800T200-43	0.0451	0.541	1.84	4.887	1.197	3.006	0.175	0.569	4.043	0.676	13.35	1030					0.367	2.124	-0.913	0.587	3.193	0.918
800T200-54	0.0566	0.679	2.31	6.152	1.501	3.011	0.218	0.567	5.505	1.009	19.93	2039	5.149	0.871	26.09	2039	0.725	2.664	-0.908	0.584	3.196	0.919
800T200-68	0.0713	0.854	2.91	7.786	1.888	3.019	0.272	0.564	7.306	1.490	29.45	4087	7.051	1.310	39.22	4087	1.448	3.357	-0.902	0.580	3.201	0.921
800T200-97	0.1017	1.218	4.15	11.212	2.683	3.034	0.379	0.558	11.176	2.491	49.22	8843	10.833	2.347	70.27	10885	4.200	4.792	-0.889	0.571	3.210	0.923
1000T125-43[1]	0.0451	0.563	1.92	6.630	1.305	3.431	0.047	0.290	5.886	0.819	16.19	822					0.382	0.973	-0.379	0.259	3.464	0.988
1000T125-54	0.0566	0.707	2.41	8.333	1.634	3.434	0.059	0.288	7.960	1.216	24.03	1628	7.479	1.055	31.59	1628	0.755	1.212	-0.376	0.256	3.466	0.988
1000T125-68	0.0713	0.890	3.03	10.522	2.053	3.438	0.073	0.286	10.452	1.781	35.19	3261	10.155	1.575	47.15	3261	1.508	1.515	-0.372	0.253	3.470	0.989
1000T125-97	0.1017	1.269	4.32	15.077	2.912	3.447	0.100	0.280	15.077	2.907	57.44	8843	15.077	2.753	82.42	9507	4.375	2.123	-0.363	0.247	3.477	0.989
1000T150-43[1]	0.0451	0.586	1.99	7.207	1.419	3.507	0.080	0.370	6.195	0.837	16.54	822					0.397	1.612	-0.513	0.345	3.564	0.979
1000T150-54	0.0566	0.735	2.50	9.061	1.777	3.511	0.100	0.368	8.430	1.249	24.69	1628	7.880	1.079	32.29	1628	0.785	2.013	-0.509	0.342	3.567	0.980
1000T150-68	0.0713	0.926	3.15	11.445	2.233	3.516	0.124	0.366	11.342	1.846	36.48	3261	10.774	1.621	48.53	3261	1.569	2.522	-0.505	0.339	3.571	0.980
1000T150-97	0.1017	1.320	4.49	16.413	3.170	3.526	0.171	0.360	16.413	3.165	62.54	8843	16.413	2.902	86.90	9507	4.550	3.557	-0.495	0.332	3.579	0.981
1000T200-43[1]	0.0451	0.631	2.15	8.361	1.646	3.640	0.183	0.539	6.722	0.861	17.01	822					0.428	3.540	-0.813	0.534	3.769	0.953
1000T200-54	0.0566	0.792	2.69	10.516	2.062	3.645	0.228	0.537	9.231	1.295	25.60	1628	8.560	1.111	33.26	1628	0.845	4.434	-0.809	0.531	3.772	0.954
1000T200-68	0.0713	0.997	3.39	13.292	2.594	3.651	0.284	0.534	12.551	1.936	38.26	3261	11.820	1.684	50.42	3261	1.690	5.576	-0.803	0.527	3.776	0.955
1000T200-97	0.1017	1.422	4.84	19.087	3.686	3.664	0.397	0.528	19.031	3.427	67.72	8843	18.583	3.081	92.25	9507	4.901	7.924	-0.791	0.519	3.786	0.956
1200T125-54[1]	0.0566	0.820	2.79	13.335	2.186	4.033	0.060	0.271	12.296	1.491	29.47	1354	11.460	1.286	38.51	1354	0.876	1.820	-0.333	0.230	4.055	0.993
1200T125-68	0.0713	1.033	3.51	16.826	2.747	4.036	0.074	0.268	16.246	2.206	43.60	2713	15.686	1.934	57.90	2713	1.750	2.270	-0.329	0.227	4.059	0.993
1200T125-97	0.1017	1.472	5.01	24.078	3.897	4.044	0.102	0.263	24.078	3.690	72.92	7902	23.751	3.442	103.06	7902	5.076	3.171	-0.322	0.222	4.065	0.994
1200T150-54[1]	0.0566	0.848	2.89	14.378	2.357	4.117	0.103	0.348	12.962	1.530	30.23	1354	12.020	1.313	39.31	1354	0.906	3.033	-0.454	0.310	4.156	0.988
1200T150-68	0.0713	1.068	3.64	18.148	2.963	4.121	0.127	0.345	17.568	2.281	45.08	2713	16.566	1.987	59.48	2713	1.810	3.795	-0.450	0.307	4.160	0.988
1200T150-97	0.1017	1.523	5.18	25.987	4.206	4.130	0.176	0.340	25.987	3.996	78.97	7902	25.719	3.616	108.27	7902	5.252	5.335	-0.441	0.301	4.168	0.989
1200T200-54[1]	0.0566	0.905	3.08	16.464	2.699	4.265	0.236	0.510	14.078	1.582	31.26	1354	12.962	1.350	40.41	1354	0.966	6.714	-0.730	0.487	4.357	0.972
1200T200-68	0.0713	1.140	3.88	20.791	3.395	4.271	0.294	0.508	19.277	2.383	47.09	2713	18.026	2.058	61.62	2713	1.931	8.431	-0.725	0.483	4.362	0.972
1200T200-97	0.1017	1.625	5.53	29.805	4.824	4.283	0.410	0.502	29.805	4.298	84.93	7902	28.959	3.819	114.35	7902	5.602	11.945	-0.714	0.476	4.371	0.973

[1] Web-height to thickness ratio exceeds 200. Web Stiffeners are required at all support points and concentrated loads.
[2] Allowable moment includes cold-work of forming.