HEADED ANCHOR LENGTH	
SLAB DEPTH	STUD LENGTH
< 6"	2"
6" - 7"	3"
≥8"	4"

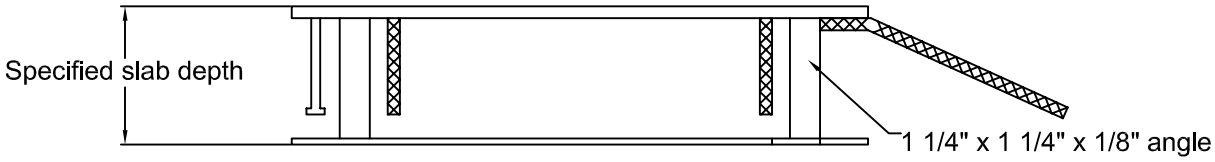

C 24" Bollard Base - End View
1-1/2" = 1'-0"

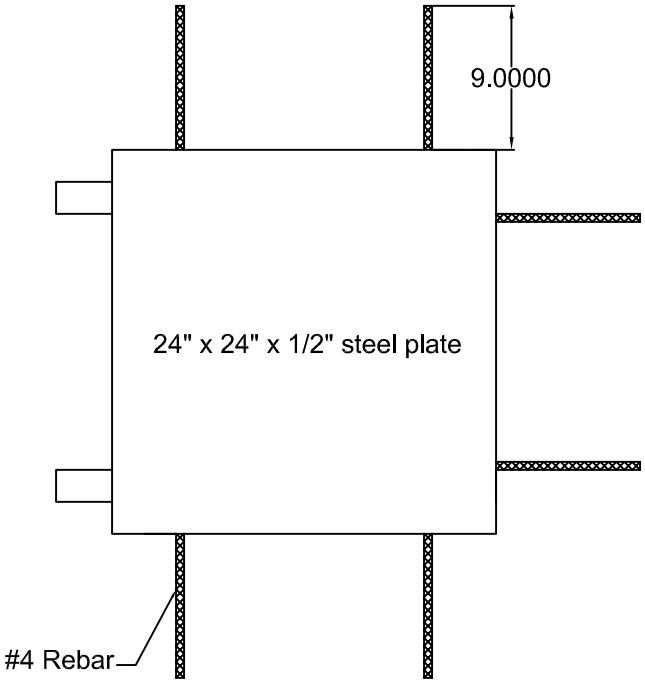

A 24" Bollard Base - Plan View
1" =1'-0"

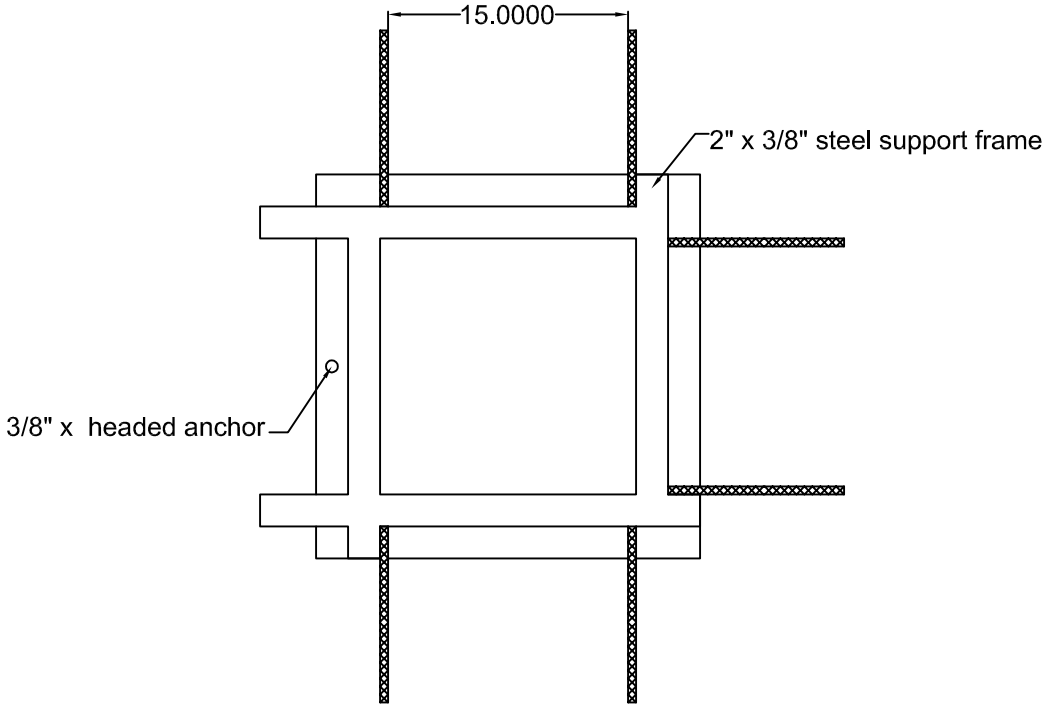

B 24" Bollard Base - Bottom View
1" = 1'-0"

SHEET#

24BB-1

PNA Square Bollard Base - 24" 3-View

DATE	SCALE	JOB #	DRAWN BY	APPROVED
August 2007	NTS		MSS	

©PNA Construction Technologies, Inc. All rights reserved. Diamond Dowel®, Armor-Edge®, Load Plate Basket® and PD3 Basket® are registered trademarks and HydraCure™ and Square™ Dowel Clip are trademarks of PNA Construction Technologies, Inc. Products shown may be covered by one or more of U.S. patents #6,775,952, #6,354,760, #5618125; Great Britain patent #1034340; Mexico patent #22942; New Zealand patent #504785; India patent #203607 and other pending patents.

© 2007 PNA Construction Technologies

PNA CONSTRUCTION TECHNOLOGIES
www.pna-inc.com
Nine Dunwoody Park, Suite 111
Atlanta, GA 30338
(800) 542-0214
fax (770) 455-6803