Fastening Systems Technical Guide

C-F-2023TECHSUP | (800) 999-5099 | strongtie.com

SIMPSON Strong-Tie

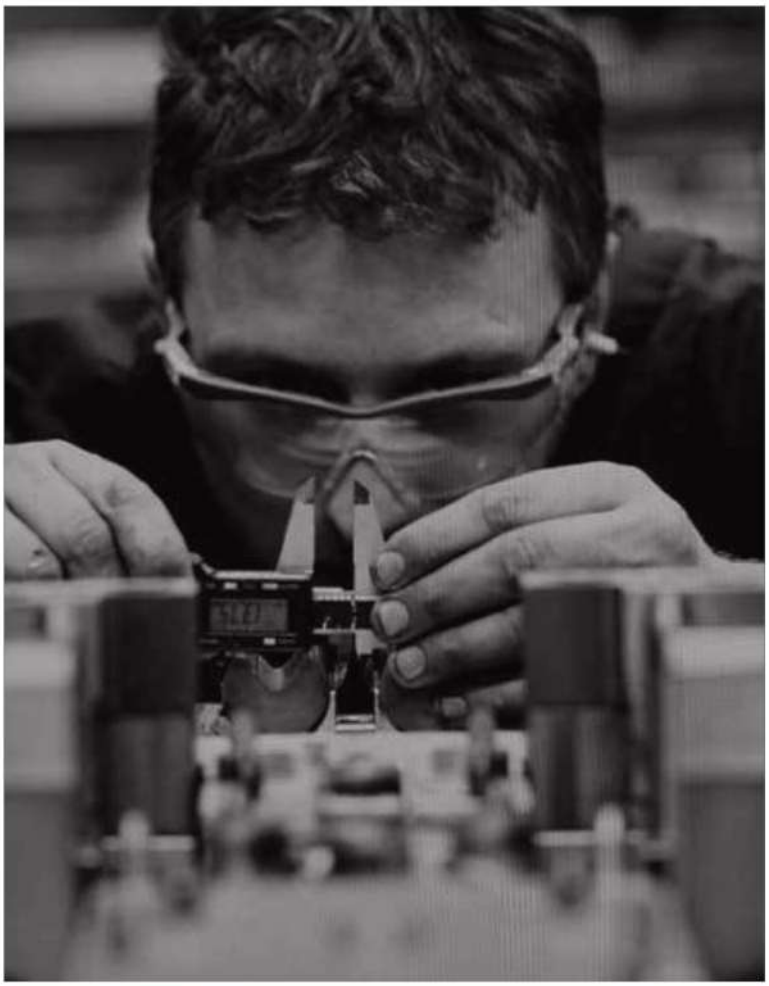

MTS Insight

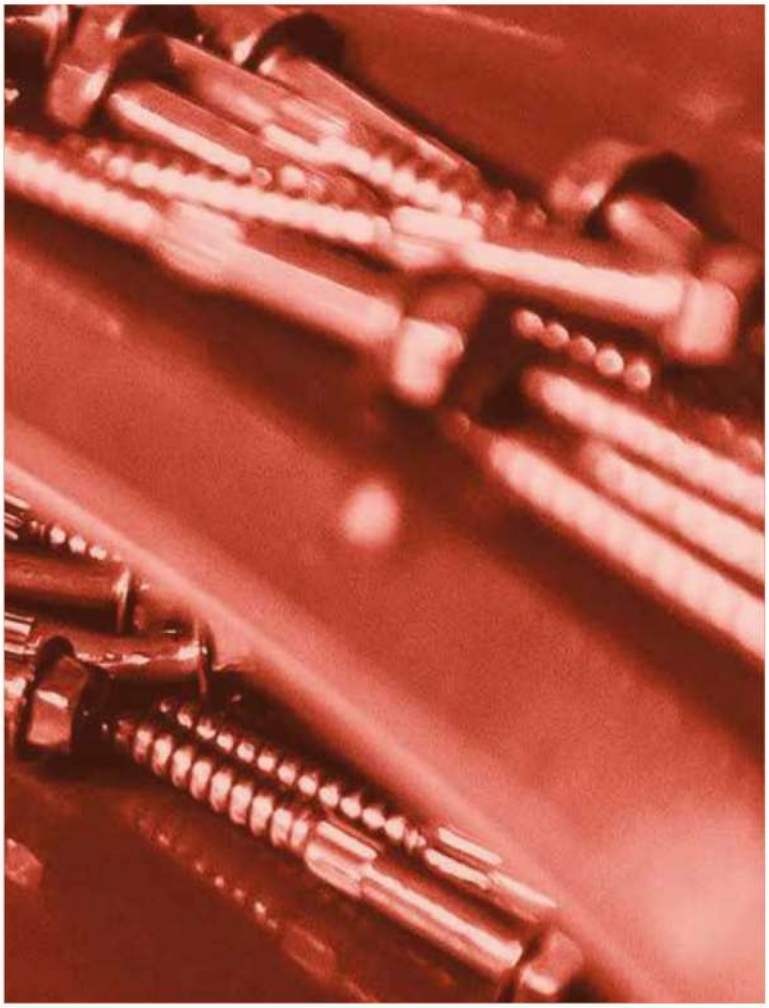

Around here, R&D stands for rigorous and demanding.

Like the engineers who use our products, Simpson Strong-Tie is always looking for smarter ways to design and build safer, stronger structures.

That's why we're dedicated to ongoing structural systems research and technology. Rigorous product testing and refinement go into every fastening solution we offer — for every application. Cross-laminated timber. Wood to steel. Decks, docks and boardwalks. Connector fastening and more.

Whatever your project, Simpson Strong-Tie delivers the most advanced fastening systems — proven and code-listed — to help you get the job done.

Simpson Strong-Tie | strongtie.com

SIMPSON Strong-Tie

Table of Contents

General Information

Important Information — Warnings and Warranties . . . 8
General Notes . . . 9
Understanding the Corrosion Issue . . . 10
Corrosion Conditions . . . 11
Guidelines for Selecting Materials and Coatings . . . 12
Fastener Overview . . . 15
Nail Types . . . 16
Fastener Overview/Screw Head Pull-Through . . . 20
Connector Fastening . . . 21
General Load Tables . . . 22
Fasteners for Use with Alternate Lumber Species . . . 23
General Material Safety Data Note . . . 24
Fastener Finder . . . 25

Wood and Engineered-Wood Fastening

Structural and General Fastening

Mechanical Properties of Strong-Drive® and Deck-Drive™ Screws . . . 28
Wafer-Head Construction Screw . . . 33
Finish Trim Screw . . . 34
Deck-Drive™ DSV WOOD and CSV CONSTRUCTION Screws . . . 35
Strong-Drive® SDWS TIMBER Screw (Exterior Grade) . . . 37
Strong-Drive® SDWS FRAMING Screw . . . 41
Deck-Drive™ DSV WOOD Screw . . . 45
Strong-Drive® SDWV SOLE-TO-RIM Screw . . . 47
Strong-Drive® DWP WOOD SS Screw . . . 49
Strong-Drive® SDWS TIMBER SS Screw . . . 51
Strong-Drive® SDWS TIMBER Screw (Interior Grade) . . . 53
Strong-Drive® SDWH TIMBER-HEX Screw . . . 58
Strong-Drive® SDWH TIMBER-HEX HDG Screw . . . 62
Strong-Drive® SDWH TIMBER-HEX SS Screw . . . 64
Strong-Drive® SD CONNECTOR Screw . . . 66
Strong-Drive® SD CONNECTOR SS Screw . . . 68
Strong-Drive® SDS HEAVY-DUTY CONNECTOR Screw . . . 70

Ledger Structural Fastening Applications

Strong-Drive® SDWS TIMBER Screw (Exterior Grade) . . . 72
Strong-Drive® SDWH TIMBER-HEX Screw . . . 75
Strong-Drive® SDS HEAVY-DUTY CONNECTOR Screw . . . 78
Strong-Drive® SDWS TIMBER Screw . . . 79

Exterior Foam-to-Wood Fastening

Strong-Drive SDWS TIMBER Screw . . . 80

Rafter/Truss/Plate Fastening

Strong-Drive SDWC TRUSS Screw . . . 82
Quik Stik™ Rafter and Truss Fastening System . . . 98

Non-Load-Bearing Wall to Truss/Joint Fastening

Strong-Drive® SDPW **DEFLECTOR** Screw . . . 103

Sole/Top Plate-to-Rim Fastening

Strong-Drive® SDWC TRUSS Screw . . . 106
Strong-Drive® SDWV SOLE-TO-RIM Screw . . . 107
Strong-Drive® SDWS TIMBER Screw . . . 108
Strong-Drive® SDWH TIMBER-HEX Screw . . . 109
Strong-Drive® SDWS TIMBER Screw and SDWH TIMBER-HEX Screw . . . 110
Strong-Drive® SDS HEAVY-DUTY CONNECTOR Screw . . . 112

Floor-to-Floor Fastening

Strong-Drive® SDWF FLOOR-TO-FLOOR Screw . . . 113
Strong-Drive® SDWS TIMBER Screw and SDWH TIMBER-HEX HDG Screw . . . 119

Subfloor and Sheathing Fastening

Strong-Drive® WSV SUBFLOOR Screw . . . 122

Multi-Ply Fastening

Strong-Drive® SDW TRUSS-PLY and EWP-PLY Screws . . . 125
Strong-Drive® SDWS TIMBER Screw . . . 131
Strong-Drive® SDW TRUSS-PLY and SDWS TIMBER Screws . . . 132
Strong-Drive® WSV SUBFLOOR Screw . . . 136

Mass Timber/CLT Fastening

Strong-Drive® SDHR Combo-Head Screw . . . 138
Strong-Drive® SDCF TIMBER-CF Screw . . . 140
Strong-Drive® SDCF TIMBER-CF and SDCP TIMBER CP Screws . . . 144
Structural Screw Applications . . . 145

Deck and Dock Applications

Fastening for Decks

Alternate Fasteners for Connection Details . . . 150
Deck-Drive™ DWP WOOD SS Screw . . . 153
Deck-Drive™ DSV WOOD Screw . . . 154
Deck-Drive™ DCU COMPOSITE Screw . . . 156

Deck Construction — Ledgers

Strong-Drive® SDWS TIMBER Screw . . . 157
Strong-Drive® SDWS TIMBER SS Screw . . . 158
Strong-Drive® SDWH TIMBER-HEX Screw . . . 159
Strong-Drive® SDWH TIMBER-HEX and SDWS TIMBER Screw . . . 160
Strong-Drive® SDWH TIMBER-HEX HDG Screw . . . 162
Strong-Drive® SDWH TIMBER-HEX SS Screw . . . 164
Strong-Drive® SDS HEAVY-DUTY CONNECTOR Screw . . . 166
Strong-Drive® SDS, SDWS and SDWH Applications . . . 167

Deck Construction — Guard Posts

Strong-Drive® SDWS TIMBER Screw . . . 170
Strong-Drive® SDWS FRAMING Screw . . . 174

Deck Construction — Wood Balusters

Fasteners for Wood Baluster Installations . . . 176

Deck Construction — Beam-to-Post

Strong-Drive® SDWH TIMBER-HEX HDG Screw . . . 178

Dock Applications

Strong-Drive® SDWH TIMBER-HEX HDG Screw . . . 179

Metal-to-Wood and Connector Fastening

Connector Fastening

Fastener Types for Connectors . . . 200

Connector/Steel-to-Wood Fastening

Strong-Drive® SDS HEAVY-DUTY CONNECTOR Screw . . . 202
Strong-Drive® SD CONNECTOR and SD CONNECTOR SS Screw . . . 203
Strong-Drive® SCN SMOOTH-SHANK CONNECTOR Nail . . . 206
Strong-Drive® SCNR RING-SHANK CONNECTOR Nail . . . 207
OUTDOOR ACCENTS® Structural Wood Screw . . . 208
OUTDOOR ACCENTS® Connector Screw . . . 209

Wood and Sheathing to Steel Fastening

Wood-to-Steel Fastening

Strong-Drive® TB WOOD-TO-STEEL Screw . . . 212
Strong-Drive® TF WOOD-TO-STEEL Screw . . . 213

Sheathing-to-Steel Fastening

Strong-Drive® PPHD SHEATHING-TO-CFS Screw . . . 214
Strong-Drive® CBSDQ SHEATHING-TO-CFS Screw . . . 215

Cold-Formed Steel (CFS) Systems

CFS Systems

Strong-Drive® PPHD/CBSDQ/FHSD/WSFLRV Screws . . . 218
Strong-Drive® DWF/DWFSD Screws . . . 221
Strong-Drive® PHSD/FPHSD Screws . . . 222

General Metal-to-Metal Fastening

CFS Connections

PC Screws . . . 226
Strong-Drive® PHSD FRAMING-TO-CFS Screw . . . 227
Strong-Drive® FPHSD FRAMING-TO-CFS Screw . . . 227
Strong-Drive® XE EXTERIOR STRUCTURAL METAL Screw . . . 228
Strong-Drive® SELF-DRILLING X METAL Screw . . . 229
Self-Drilling E Metal Screw . . . 231

Steel Deck

Steel-Deck Fastening . . . 232
Steel-Deck Diaphragm Calculator . . . 233
Strong-Drive® XL LARGE-HEAD and XM MEDIUM-HEAD METAL Screws . . . 234

C-F-2023TECHSUP © 2023 Simpson Strong-Tie Company Inc.

Alphabetical Index

A

Alternate Fasteners for Connection Details 150

C

Connector Fastening. 21
Corrosion Conditions 11

D

Deck-Drive™ DCU COMPOSITE Screw. 156
Deck-Drive™ DSV WOOD and CSV CONSTRUCTION Screws 35
Deck-Drive™ DSV WOOD Screw. 45
Deck-Drive™ DSV WOOD Screw. 154
Deck-Drive™ DWP WOOD SS Screw 153

F

Fastener Finder 25
Fastener Overview. 15
Fastener Overview/Screw Head Pull-Through 20
Fasteners for Use with Alternate Lumber Species. 23
Fasteners for Wood Baluster Installations 176
Fastener Types for Connectors 200
Finish Trim Screw 34

G

General Load Tables 22
General Material Safety Data Note 24
General Notes. 9
Guidelines for Selecting Materials and Coatings 12

I

Important Information — Warnings and Warranties. 8

M

Mechanical Properties of Strong-Drive® and Deck-Drive™ Screws . . 28

N

Nail Types 16

O

OUTDOOR ACCENTS® Connector Screw 209
OUTDOOR ACCENTS® Structural Wood Screw. 208

P

PC Screws 226

Q

Quik Stik™ Rafter and Truss Fastening System 98

S

Self-Drilling E Metal Screw 231
Steel-Deck Diaphragm Calculator 233
Steel-Deck Fastening 232
Strong-Drive® CBSDQ SHEATHING-TO-CFS Screw 215
Strong-Drive® DWF/DWFSD Screws. 221
Strong-Drive® DWP WOOD SS Screw 49
Strong-Drive® FPHSD FRAMING-TO-CFS Screw 227
Strong-Drive® PHSD/FPHSD Screws 222
Strong-Drive® PHSD FRAMING-TO-CFS Screw 227
Strong-Drive® PPHD/CBSDQ/FHSD/WSFLRV Screws. 218
Strong-Drive® PPHD SHEATHING-TO-CFS Screw 214
Strong-Drive® SCNR RING-SHANK CONNECTOR Nail 207
Strong-Drive® SCN SMOOTH-SHANK CONNECTOR Nail 206
Strong-Drive® SDCF TIMBER-CF and SDCP TIMBER CP Screws . 144
Strong-Drive® SDCF TIMBER-CF Screw. 140
Strong-Drive® SD CONNECTOR and SD CONNECTOR SS Screw. 203
Strong-Drive® SD CONNECTOR Screw 66
Strong-Drive® SD CONNECTOR SS Screw 68
Strong-Drive® SDHR Combo-Head Screw 138
Strong-Drive® SDPW DEFLECTOR Screw 103
Strong-Drive® SDS HEAVY-DUTY CONNECTOR Screw. 70
Strong-Drive® SDS HEAVY-DUTY CONNECTOR Screw. 78
Strong-Drive® SDS HEAVY-DUTY CONNECTOR Screw. 112
Strong-Drive® SDS HEAVY-DUTY CONNECTOR Screw. 166
Strong-Drive® SDS HEAVY-DUTY CONNECTOR Screw. 202
Strong-Drive® SDS, SDWS and SDWH Applications. 167
Strong-Drive® SDWC TRUSS Screw. 106
Strong-Drive® SDWF FLOOR-TO-FLOOR Screw 113
Strong-Drive® SDWH TIMBER-HEX and SDWS TIMBER Screw. . . 160
Strong-Drive® SDWH TIMBER-HEX HDG Screw 62
Strong-Drive® SDWH TIMBER-HEX HDG Screw 162
Strong-Drive® SDWH TIMBER-HEX HDG Screw 178
Strong-Drive® SDWH TIMBER-HEX HDG Screw 179
Strong-Drive® SDWH TIMBER-HEX Screw. 58
Strong-Drive® SDWH TIMBER-HEX Screw. 75
Strong-Drive® SDWH TIMBER-HEX Screw. 109
Strong-Drive® SDWH TIMBER-HEX Screw. 159
Strong-Drive® SDWH TIMBER-HEX SS Screw 64
Strong-Drive® SDWH TIMBER-HEX SS Screw 164
Strong-Drive® SDWS FRAMING Screw. 41
Strong-Drive® SDWS FRAMING Screw 174
Strong-Drive® SDWS TIMBER Screw 79
Strong-Drive® SDWS TIMBER Screw 108
Strong-Drive® SDWS TIMBER Screw 131
Strong-Drive® SDWS TIMBER Screw 157
Strong-Drive® SDWS TIMBER Screw 170
Strong-Drive® SDWS TIMBER Screw and
SDWH TIMBER-HEX HDG Screw. 119
Strong-Drive® SDWS TIMBER Screw and
SDWH TIMBER-HEX Screw 110
Strong-Drive® SDWS TIMBER Screw (Exterior Grade) 37
Strong-Drive® SDWS TIMBER Screw (Exterior Grade) 72
Strong-Drive® SDWS TIMBER Screw (Interior Grade) 53
Strong-Drive® SDWS TIMBER SS Screw 51
Strong-Drive® SDWS TIMBER SS Screw 158
Strong-Drive® SDW TRUSS-PLY and EWP-PLY Screws. 125
Strong-Drive® SDW TRUSS-PLY and SDWS TIMBER Screws 132
Strong-Drive® SDWV SOLE-TO-RIM Screw 47
Strong-Drive® SDWV SOLE-TO-RIM Screw 107
Strong-Drive® SELF-DRILLING X METAL Screw. 229
Strong-Drive® TB WOOD-TO-STEEL Screw. 212
Strong-Drive® TF WOOD-TO-STEEL Screw 213
Strong-Drive® WSV SUBFLOOR Screw 122
Strong-Drive® WSV SUBFLOOR Screw 136
Strong-Drive® XE EXTERIOR STRUCTURAL METAL Screw 228
Strong-Drive® XL LARGE-HEAD and
XM MEDIUM-HEAD METAL Screws 234
Strong-Drive SDWC TRUSS Screw 82
Strong-Drive SDWS TIMBER Screw 80
Structural Screw Applications 145

U

Understanding the Corrosion Issue. 10

W

Wafer-Head Construction Screw. 33

C-F-2023TECHSUP © 2023 Simpson Strong-Tie Company Inc.

SIMPSON Strong-Tie

Company Information

For more than 65 years, Simpson Strong-Tie has focused on creating structural products that help people build safer and stronger homes and buildings. A leader in structural systems research and technology, Simpson Strong-Tie is one of the largest suppliers of structural building products in the world. The Simpson Strong-Tie commitment to product development, engineering, testing and training is evident in the consistent quality and delivery of its products and services.

For more information, visit the company's website at **strongtie.com**.

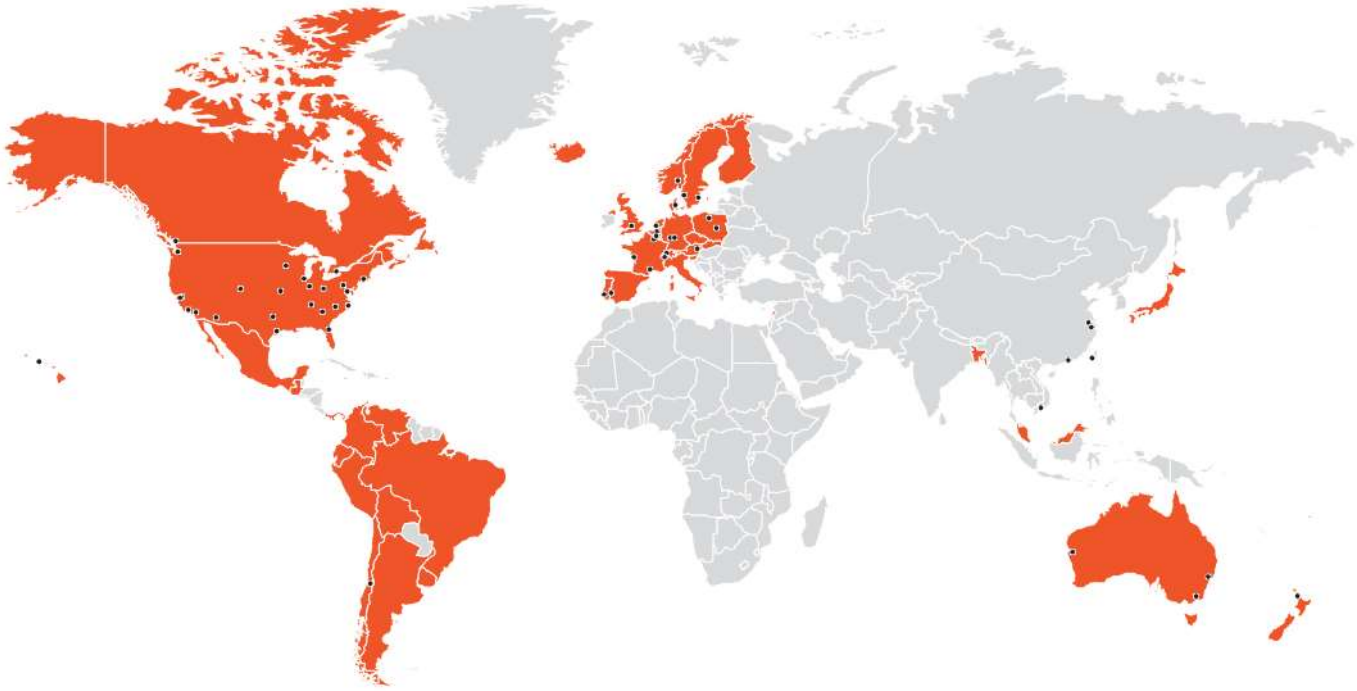

● Factories, offices and/or warehouses are located in Australia, Austria, Belgium Canada, Chile, China, Czech Republic, Denmark, France, Germany, Italy, Netherlands, New Zealand, Norway, Poland, Portugal, Sweden, Switzerland, Taiwan, UK, USA and Viet Nam

■ Distribution in Australia, Canada, Chile, parts of South America, Western Europe, parts of Eastern Europe, Middle East, Japan and other Asian countries, Mexico, New Zealand, UK and USA

Additional Resources:

- C-F-2023
  Fastening Systems Catalog
- S-M-CMG22
  Composite Decking Color Matching Guide
- C-C-2021
  Wood Construction Connectors catalog
- C-C-MODULAR
  Connectors and Fasteners for Modular Building catalog
- C-C-MASSTIMBER
  Connectors & Fasteners for Mass Timber Construction catalog
- C-A-2021
  Anchoring, Fastening, Restoration and Strengthening Systems for Concrete and Masonry catalog

(800) 999-5099 | strongtie.com

All rights reserved. This catalog may not be reproduced in whole or in part without the prior written approval of Simpson Strong-Tie Company Inc.

C-F-2023TECHSUP © 2023 Simpson Strong-Tie Company Inc.

Company Information

The Simpson Strong-Tie Company Inc. No-Equal Pledge® Includes:

- Quality products value-engineered for the lowest installed cost at the highest-rated performance levels
- The most thoroughly tested and evaluated products in the industry
- Strategically located manufacturing and warehouse facilities
- National code agency listings
- The largest number of patented connectors in the industry
- Global locations with an international sales team
- In-house R&D and tool and die professionals
- In-house product testing and quality control engineers

Support for industry groups, including: **AISI, AITC, ASTM, ASCE, AWC, AWPA, ACI, AISC, CSI, CFSEI, ICFA, NBMDA, NLBMDA, SBCA, SDI, SETMA, SFA, SFIA, STAFDA, SREA, NFBA, TPI, WDSC, WIJMA, WTCA** and local engineering groups.

The Simpson Strong-Tie Quality Policy

We help people build safer structures economically. We do this by designing, engineering and manufacturing No Equal® structural connectors and other related products that meet or exceed our customers' needs and expectations. Everyone is responsible for product quality and is committed to ensuring the effectiveness of the Quality Management System.

Mike Olosky
Chief Executive Officer

Getting Fast Technical Support

When calling for engineering technical support, having the following information at hand will help us to serve you promptly and efficiently.

- Which Simpson Strong-Tie® catalog are you using? *(See the front cover for the catalog number.)*
- Which Simpson Strong-Tie product are you using?
- What is the type and thickness of the materials you are fastening?
- What is your load requirement?
- If using a Quik Drive® attachment:
  - What attachment are you using?
  - What is the RPM range of your screwdriver motor or model number?

You should consult a qualified design professional familiar with all applicable building codes each time you use a Simpson Strong-Tie product.

bsi ISO 9001 Quality Management Systems CERTIFIED

FM 767499

General Information 8–25
Wood and Engineered Wood Fastening 26–147
Deck and Dock Applications 148–197
Metal-to-Wood and Connector Fastening 198–209
Wood and Sheathing to Steel Fastening 210–215
Cold-Formed Steel (CFS) Systems 216–223
General Metal-to-Metal Fastening 224–235

C-F-2023TECHSUP © 2023 Simpson Strong-Tie Company Inc.

Warning

Simpson Strong-Tie fasteners and fastening products are designed and tested for certain applications and environments. To obtain optimal performance from Simpson Strong-Tie products, the products must be properly installed and used in accordance with the installation instructions and design limits provided by Simpson Strong-Tie Company Inc.

To ensure proper installation and use, designers and installers must carefully read the following General Notes, catalog pages for specific product installation instructions and notes.

Proper product installation requires careful attention to all notes and instructions. Installers, designers, engineers and consumers should consult the Simpson Strong-Tie Company Inc. website at **strongtie.com** to obtain additional design and installation information, including:

- Information on workshops Simpson Strong-Tie conducts at various training centers throughout the country
- Code Reports
- Technical fliers and bulletins
- Corrosion information
- Answers to frequently asked questions and technical topics

Failure to follow fully all of the notes and instructions provided by Simpson Strong-Tie Company Inc. may result in improper installation of products. Improperly installed products may not perform to the specifications set forth in this catalog.

Simpson Strong-Tie Company Inc. does not guarantee the performance or safety of products that are modified, improperly installed or not used in accordance with the design and load limits set forth in this catalog.

Terms and Conditions of Sale

Product Use
Products in this catalog are designed and manufactured for the specific purposes shown, and should not be used with other connectors not approved by a qualified licensed/certified building design professional, a licensed professional engineer or licensed architect ("designer"). You should review our website and consult a qualified designer familiar with all applicable building codes each time you use a Simpson Strong-Tie product.

Indemnity
Any designer or other person who modifies any products, changes any installation procedures or designs any non-catalog products for fabrication by Simpson Strong-Tie Company Inc. shall, regardless of specific instructions to the user, indemnify, defend, and hold harmless Simpson Strong-Tie Company Inc. for any and all claimed loss or damage occasioned in whole or in part by such products.

Non-Catalog and Modified Products
Modifications to products or changes in installation procedures should only be made by a qualified professional designer. The performance of such modified products or altered installation procedures is the sole responsibility of the designer. Any person modifying Simpson Strong-Tie products must provide the installer with specific instructions on the modified products' specifications, installation and use.

Consult Simpson Strong-Tie Company Inc. for applications for which there is no catalog product, or for connectors for use in hostile environments, with excessive wood shrinkage, or with abnormal loading or erection requirements.

Non-catalog products must be designed by a qualified designer and will be fabricated by Simpson Strong-Tie in accordance with customer specifications.

Any modified, special order or non-catalog products, or any products that are not installed strictly in accordance with Simpson Strong-Tie installation procedures, are provided "AS IS" and without any representation or warranty of any kind.

Limited Warranty

For the Limited Warranty that applies to Simpson Strong-Tie products, please consult **strongtie.com/limited-warranties**. See p. 236 for the Limited Warranty in effect when this catalog was first published. To obtain a copy of the current Limited Warranty, contact us at **limited_warranty@strongtie.com**, (800) 999-5099 or Simpson Strong-Tie Company Inc., 5956 West Las Positas Boulevard, Pleasanton, CA 94588.

The Limited Warranty contains important disclaimers, limitations and exclusions, and applies only if the products have been properly specified, installed, maintained, and used in accordance with the design limits and the structural, technical, and environmental specifications in the Simpson Strong-Tie Documentation. All future purchases of Simpson Strong-Tie products are subject to the terms of the Limited Warranty in effect as of the purchase date.

Although products are designed for a wide variety of uses, Simpson Strong-Tie assumes no liability for confirming that any product is appropriate for an intended use, and each intended use of a product must be reviewed and approved by qualified professionals. Each product is designed for the load capacities and uses listed in the Simpson Strong-Tie Documentation, subject to the limitations and other information set forth therein. Due to the particular characteristics of potential impact events such as earthquakes and high velocity winds, the specific design and location of the structure, the building materials used, the quality of construction, or the condition of the soils or substrates involved, damage may nonetheless result to a structure and its contents even if the loads resulting from the impact event do not exceed Simpson Strong-Tie's specifications and the products are properly installed in accordance with applicable building codes, laws, rules and regulations. Simpson products will perform in accordance with the specifications set forth in the applicable Simpson Strong-Tie catalog. Additional performance limitations for specific products may be listed on the applicable catalog pages.

C-F-2023TECHSUP © 2023 Simpson Strong-Tie Company Inc.

General Notes

These notes are provided to ensure proper selection and installation of Simpson Strong-Tie Company Inc. products and must be followed carefully.

a. Simpson Strong-Tie Company Inc. reserves the right to change specifications, designs and models without notice or liability for such changes.

b. Do not exceed published loads, doing so could jeopardize the connection.

c. A fastener that splits the wood will not take the design load. Evaluate splits to determine if the connection will perform as required. Dry wood may split easily and should be evaluated as required. If wood tends to split consider pre-boring holes with diameters specified in the 2018 Edition National Design Specification (NDS) sections 12.1.5 for wood screws and 12.1.6 for nails.

d. Fasteners may break if driven into hard materials or if countersunk below the surface of the substrate fastened.

e. Do not overdrive fasteners. Overdriven fasteners may have a reduction in shear and pull-through capacities.

f. Use products only in accordance with all instructions.

g. All specified fasteners must be installed according to the instructions in this catalog.

h. There are many choices of fasteners, tools and other products. It is often difficult to determine which type of product is best suited for your application. In some cases, there may be more than one type of product that will work well. The information in this catalog is intended to guide the designer toward the product best suited for the specific application, use and environment. The choice of which product to use should be made by a qualified designer.

i. All connected members and related elements shall be designed by the designer.

j. Select fasteners of a type, size, length, thread, head, coating, material, point and other characteristics suitable for your application, use and environment. Incorrect fastener selection may cause the connection to fail.

k. If using a fastener from this catalog with any other Simpson Strong-Tie product, consult the appropriate Simpson Strong-Tie catalog or **strongtie.com** for detailed information concerning the other product.

l. Only use fasteners for their intended purpose as described in this publication. Connection failures can result from inappropriate substitution.

m. Test drive fasteners to assure fasteners install correctly.

n. The term "designer" used throughout this catalog is intended to mean a licensed/certified building design professional, a licensed professional engineer or licensed architect.

o. Follow material manufacturer's installation instructions and fastener recommendations.

p. Unless otherwise noted, nail "penny size" does not imply specific diameters or load capacities. Design standards must be used in conjunction with fastener material, diameter and length to determine acceptable uses.

q. Use Quik Drive® tools only with authentic Quik Drive fasteners. Other fasteners will void the warranty and may cause the tool to malfunction and become damaged.

r. If a Quik Drive product is compatible with a specified tool, do not use the product with any other tool.

s. Power-driven fasteners may deflect and injure the operator or others. Follow the tool manufacturer's operating instructions and use appropriate safety equipment.

t. Choose the proper tool to suit the fastener and applications.

u. Use proper safety equipment and follow all safety instructions.

v. Always wear protective eyewear.

w. With the use of any power or power fastener, follow manufacturer's safety instructions.

x. Dissimilar metal combinations should be carefully assessed and avoided if possible.

y. All carbon steel based fasteners have the potential to corrode and rust.

z. Some hardened fasteners may have premature failure if exposed to moisture. These fasteners are recommended to be used in interior dry conditions.

aa. Select a fastener only after reading the corrosion information on pp. 10–14 of this catalog.

ab. Be aware of special conditions that may increase corrosion risk and select product accordingly.

ac. Simpson Strong-Tie screws for applications in wood and engineered wood are designed to be installed without predrilling. However, some installation conditions may require predrilling to prevent splitting, torsional failure of the fastener, or to facilitate installation. See note c for more information.

ad. Screws made from austenitic stainless steel are generally softer and have less torsional strength than screws made from carbon steel. Simpson Strong-Tie does not assume liability for breakage or damage due to screw breakage during or after installation. Pre-drilling may be necessary in some cases. For best results, drive at 2,500 rpm or less. See note c for more information.

ae. Allowable withdrawal and shear values for screws used in wood and engineering wood applications are based on testing conducted by Simpson Strong-Tie in their ISO 17025 and IAS accredited laboratories.

af. This catalog includes all information available as of the effective date of publication. Please consult **strongtie.com** for current information.

C-F-2023TECHSUP © 2023 Simpson Strong-Tie Company Inc.

Deck Construction and Fastening Tips

a. Before beginning construction, make sure boards are dry and acclimated to jobsite conditions.

b. Select the proper fastener based on the importance of the connection, exposure, and the materials that are being fastened. Consult pp. 45–46 and pp. 48–50 of our *Deck Connection and Fastening Guide* (F-DECKCODE) or **strongtie.com** for guidelines on choosing the correct fastener.

c. Consider using 300 Series stainless-steel fasteners when elevated corrosion conditions may exist, such as presence of de-icing salts or close proximity to swimming pools, hot tubs, sprinklers, ponds, foliage and other moisture sources.

d. Inadequate gap spacing between boards can put additional load on the fasteners and lead to broken screws or nail pops. Spacing for wood decks depends on wood species and moisture content.

e. For composite decking, consult manufacturer fastening requirements and installation instructions related to spacing.

f. If the deck is attached to a wall or floor assembly of wood-frame construction, approved corrosion-resistant flashing should be applied to prevent water entry or penetration into the building.

g. Use caution to avoid overdriving fasteners during installation. Overdriving can cause fastener breakage and create a counterbore where water can pool, facilitating corrosion and decay.

h. Allow for proper water drainage. A deck should slope away from the structure a minimum of ⅛" to ¼" per every 12" to reduce the possibility of standing water.

i. For composite decking to be installed diagonally, reduce the on-center joist spacing following recommendations of the deck board manufacturer. For 5/4 wood decking to be installed diagonally, the spacing for supporting framing should not exceed 16" on center.

j. Adequate ventilation is necessary to minimize cupping, warping and other weathering-related defects. Construct the deck a minimum of 18" off the ground to allow proper air circulation. If this is not possible, install a plastic film moisture barrier under the deck.

k. Proper maintenance is essential. Staining and sealing, along with periodic inspection of fasteners and hardware, will potentially add years to the life of the deck.

For more information on deck construction and products from Simpson Strong-Tie, please see our *Deck Connection and Fastening Guide* (F-DECKCODE) and the most recent technical bulletin, *Fastening Systems Technical Guide* (C-F-TECHSUP) or visit **strongtie.com/deckcenter**.

Please refer to the American Wood Council's Prescriptive Residential Wood Deck Construction Guide (DCA 6) for important information on best practices and code compliant design.

Trademark Attribution

Bosch®, Bostitch®, DeWalt®, Duo-Fast®, DuraLife™, E-coat®, Enhance®, Envision®, Evergrain®, Fiberon®, Grip-Rite®, Hilti®, Hitachi®, Horizon®, Makita®, Max®, Milwaukee®, MoistureShield®, N2000®, New Castle Steel™, Paslode®, Porter Cable®, Powernail®, Primatech®, ProTect Advantage®, Ridgid®, Select®, Senco®, Spotnails®, TimberTech AZEK®, Trex® and Vantage Collection® are registered trademarks of their respective companies.

Corrosion Information

Understanding the Corrosion Issue

Metal connectors, fasteners and anchors can corrode and lose carrying capacity when installed in corrosive environments or when installed in contact with corrosive materials. The many variables present in a building environment make it impossible to predict accurately whether, or when, corrosion will begin to reach a critical level. This relative uncertainty makes it crucial that specifiers and users be knowledgeable about the potential risks and select a product suitable for the intended use. When there is any uncertainty about the possible corrosion risks of any installation, a qualified professional should be consulted. Because of the risks posed by corrosion, periodic inspections should be performed by a qualified engineer or qualified inspector and maintenance performed accordingly.

It's common to see some corrosion in outdoor applications. Even stainless steel can corrode. The presence of some corrosion does not mean that load capacity has been affected or that failure is imminent. If significant corrosion is apparent or suspected, then the wood, fasteners, anchors, and connectors should be inspected by a qualified engineer or qualified inspector. Replacement of affected components may be appropriate.

Because of the many variables involved, Simpson Strong-Tie cannot provide estimates of the service life of connectors, anchors, and fasteners. We suggest that all users and specifiers obtain recommendations on corrosion from the suppliers of the materials that will be used with Simpson Strong-Tie products, in particular, treated wood or concrete. We have attempted to provide basic knowledge on the subject here, and have additional information in our technical bulletins on the topic (**strongtie.com/info**). The Simpson Strong-Tie website should always be consulted for the latest information.

C-F-2023TECHSUP © 2023 Simpson Strong-Tie Company Inc.

Corrosion Conditions

Corrosion can result from many combinations of environmental conditions, materials, construction design, and other factors, and no single guideline addresses all corrosion possibilities. Nevertheless, important corrosion information can be obtained from the American Wood Protection Association (AWPA), the International Building Code (IBC), International Residential Code (IRC), and local building codes. The following discussion provides general guidelines and approaches for the selection of Simpson Strong-Tie products for various construction conditions, but is not intended to supersede the guidelines of the AWPA, IBC, IRC, or local building codes.

Corrosion issues for Simpson Strong-Tie products generally fall into five categories:

1. Environmental and Construction Factors

Many environments and materials can cause corrosion, including ocean salt air, condensation, duration of wetness, fire retardants, fumes, fertilizers, chlorides, sulfates, preservative-treated wood, de-icing salts, dissimilar metals, soils, and more. Designers must take all of these factors into account when deciding which Simpson Strong-Tie products to use with which corrosion-resistant coatings or materials.

The design, quality of construction, and misinstallation can directly affect the corrosion resistance of products. A product intended and installed for use in a dry-service environment may corrode if the structure design or building materials allow moisture intrusion, or expose the product to corrosive conditions, such as moisture or chemicals contained in the construction materials, soils, or atmospheres.

2. Chemically Treated Lumber

Some wood-preservative or fire-retardant chemicals or chemical retention levels create increased risk of corrosion and are corrosive to steel connectors and fasteners. For example, testing by Simpson Strong-Tie has shown that ACQ-Type D is more corrosive than Copper Azole, Micronized Copper Azole, or CCA-C. At the same time, other tests have shown that inorganic boron treatment chemicals, specifically SBX-DOT, are less corrosive than CCA-C.

Because different chemical treatments of wood have different corrosion effects, it's important to understand the relationship between the wood treatment chemicals and the coatings and base metals of Simpson Strong-Tie products.

The preservative-treated wood supplier should provide all of the pertinent information about the treated wood product. The information should include the AWPA Use Category Designation, wood species group, wood treatment chemical, and chemical retention. See building code requirements and appropriate evaluation reports for corrosion effects of wood treatment chemicals and for fastener corrosion resistance recommendations.

With Fire-Retardant-Treated (FRT) Wood, the 2018 IBC Section 2304.10.5.4 and 2018 IRC Section R317.3.4 refer to the manufacturer's recommendations, while the 2021 IBC and 2021 IRC require fasteners to be in compliance with 2304.10.6.3-.4 and R317.3.3-.4, respectively. In the absence of recommendations from the FRT manufacturer, the building codes require fasteners to be hot-dip galvanized, stainless steel, silicon bronze or copper. Simpson Strong-Tie further requires that the fastener is compatible with the metal connector hardware. Fastener shear and withdrawal allowable loads may be reduced in FRT lumber. Refer to the FRT manufacturer's evaluation report for potential reduction factors.

3. Dissimilar Metals and Galvanic Corrosion

Galvanic corrosion occurs when two electrochemically dissimilar metals contact each other in the presence of an electrolyte (such as water) that acts as a conductive path for metal ions to move from the more anodic to the more cathodic metal. Good detailing practice, including the following, can help reduce the possibility of galvanic corrosion of fasteners and connectors:

- Use fasteners or anchors and connectors with similar electrochemical properties
- Use insulating materials to separate dissimilar metals
- Ensure that the fastener or anchor is the cathode when dissimilar connector metals are present
- Prevent exposure to and pooling of electrolytes

Galvanic Series of Metals

Corroded End (Anode)
Magnesium, Magnesium alloys, Zinc
Aluminum 1100, Cadmium, Aluminum 2024-T4, Iron and Steel
Lead, Tin, Nickel (active), Inconel Ni-Cr alloy (active), Hastelloy alloy C (active)
Brasses, Copper, Cu-Ni alloys, Monel
Nickel (passive)
304 stainless steel (passive), 316 stainless steel (passive), Hasteloy alloy C (passive)
Silver, Titanium, Graphite, Gold, Platinum
Protected End (Cathode)

If you are uncertain about the galvanic corrosion potential of any installation, always consult with a corrosion expert. See the product pages for particular parts for more information regarding what coating systems are recommended or required for use with the parts in question.

4. Hydrogen-Assisted Stress Corrosion Cracking

Some hardened fasteners may experience premature failure from hydrogen-assisted stress-corrosion cracking if exposed to moisture. These fasteners are recommended for use only in dry-service conditions.

5. Indoor Swimming Pools

Indoor swimming pool environments are extremely corrosive to steel products. Also, some stainless steel is highly susceptible to stress corrosion cracking (SCC) under sustained loads in this environment and SCC can result in sudden failures. Instead of stainless steel, it is advised to use a duplex coated, post-hot-dip galvanized or ZMAX®-coated low-carbon steel for any load bearing components used in swimming pool environments. Regular maintenance is strongly advised. See **strongtie.com/corrosion** for additional information.

C-F-2023TECHSUP © 2023 Simpson Strong-Tie Company Inc.

Guidelines for Selecting Materials and Coatings

In the discussion and charts of this section, Simpson Strong-Tie presents a three-step system to determine which product coatings and base metals to use in a range of corrosion conditions. These are general guidelines that may not consider all relevant application criteria. Refer to product-specific information for additional guidance.

Simpson Strong-Tie evaluated the AWPA Use Categories (See AWPA U1-21) and ICC-ES AC257 Exposure Conditions and developed a set of corrosion resistance recommendations. These recommendations address the coating systems and materials used by Simpson Strong-Tie for fastener, connector, and anchor products. Although the AWPA Use Categories and ICC-ES AC257 Exposure Conditions specifically address treated-wood applications and some common corrosion agents, Simpson Strong-Tie believes that its recommendations may be applied more generally to other application conditions, insofar as the service environments discussed are similar. You should consult with a corrosion engineer concerning the application where advisable.

Step 1 — Evaluate the Corrosion Conditions

- **Dry Service:** Generally INTERIOR applications including wall and ceiling cavities, and in raised floor applications in enclosed buildings that have been designed to prevent condensation and exposure to other sources of moisture. Prolonged periods of wetness during construction should also be considered, as this may constitute a Wet Service or Elevated Service condition. Dry service is typical of AWPA UC1 and UC2 for wood treatment and AC257 Exposure Condition 1. Keep in mind that a dry-service environment may contain airborne salts. AC257 Exposure Condition 2 reflects the presence of airborne salt in a dry-service environment and corrosion hazard to exposed metal surfaces. It does not include effects of treatment chemicals. This condition is generally considered in Elevated and Uncertain assessments.
- **Wet Service:** Generally EXTERIOR construction in conditions other than elevated service. These include Exterior Protected and Exposed and General Use Ground Contact as described by AWPA UC4A. The AWPA U1 standard classifies exterior above-ground treatments as Use Categories UC3 (A and B) depending on moisture run-off; and for exterior ground-contact levels of protection, it has Use Categories UC4 (A-C). ICC-ES AC257 considers the exterior exposure to be limited by the presence of treatment chemicals, and corrosion accelerators. In general, the AC257 Exposure Condition 1 includes AWPA Use Categories UC1 (interior/dry) and UC2 (interior/damp), while Exposure Condition 3 is a surrogate to UC3A, 3B, and 4A (exterior, above-ground and ground-contact, general use). The ICC-ES AC257 Exposure Conditions 2 and 4 are exposures that are salt environments.
- **Elevated Service:** Includes fumes, fertilizers, soil, some preservative-treated wood (AWPA UC4B and UC4C), industrial-zone atmospheres, acid rain, salt air, and other corrosive elements.
- **Uncertain:** Unknown exposure, materials, or treatment chemicals.
- **Ocean/Water Front Service:** Marine environments that include airborne chlorides, salt air, and some salt splash. Environments with de-icing salts are included.

Step 2 — Determine Your Corrosion Resistance Classification

Corrosion Resistance Classifications

Environment	Material to Be Fastened						
	Untreated Wood or Other Material	Preservative-Treated Wood					FRT Wood
		SBX-DOT Zinc Borate	Chemical Retention ≤ AWPA, UC4A	Chemical Retention > AWPA, UC4A	ACZA	Other or Uncertain	
Dry Service	Low	Low	Low	High	Medium	High	Medium[7]
Wet Service	Medium	N/A	Medium	High	High	High	High
Elevated Service	High	N/A	Severe	Severe	High	Severe	N/A
Uncertain	High	High	High	Severe	High	Severe	Severe
Ocean/Water Front	Severe	N/A	Severe	Severe	Severe	Severe	N/A

Additional Considerations

1. Always consider the importance of the connection as well as the cost of maintenance and replacement.
2. If the information about treatment chemicals in an application is incomplete, or if there is any uncertainty as to the service environment of any application, Simpson Strong-Tie recommends the use of a Type 300 Series stainless steel. Simpson Strong-Tie has evaluated the corrosion effects of various formulations of wood treatment chemicals ACZA, ACQ, CCA, MCA, CA, and salt as corrosion accelerators. Simpson Strong-Tie has not evaluated all formulations and retentions of the named wood treatment chemicals other than to use coatings and materials in the severe category. Manufacturers may independently provide test results or other product information. Simpson Strong-Tie expresses no opinion regarding such information.
3. Type 316/305/304 stainless-steel products are recommended where preservative-treated wood used in ground contact has a chemical retention level greater than those for AWPA UC4A; CA-C, 0.15 pcf (pounds per cubic foot); CA-B, 0.21 pcf; micronized CA-C, 0.14 pcf; micronized CA-B, 0.15 pcf; ACQ-Type D (or C), 0.40 pcf. When wood treated with micronized CA-C and micronized CA-B with treatment retentions up to UC4B is in dry service, hot-dip galvanized fasteners and connectors may be suitable.
4. Mechanical galvanizations C3 and N2000 should not be used in conditions that would be more corrosive than AWPA UC3A (exterior, above ground, rapid water run off).
5. Some chemically treated wood may have chemical retentions greater than specification, particularly near the surface, making it potentially more corrosive than chemically treated wood with lower retentions. If this condition is suspected, use Type 316/305/304 stainless-steel, silicon bronze, or copper fasteners.
6. Some woods, such as cedars, redwood, and oak, contain water-soluble tannins and are susceptible to staining when in contact with metal connectors and fasteners. Applying a quality finish to all surfaces of the wood prior to installation can help reduce staining.
7. Anchors, fasteners and connectors in contact with FRT lumber shall be hot-dip galvanized or stainless steel, unless recommended otherwise by the FRT manufacturer. Many FRT manufacturers permit low-corrosion-resistant connector and fastener coatings for dry-service conditions.
8. Simpson Strong-Tie does not recommend painting stainless-steel anchors, fasteners or connectors. Imperfections or damage to the paint can facilitate collection of dirt and water that can degrade or block the passive formation of the protective chromium oxide film. When this happens, crevice corrosion can initiate and eventually become visible as a brown stain or red rust. Painting usually does not improve the corrosion resistance of stainless steel.

C-F-2023TECHSUP © 2023 Simpson Strong-Tie Company Inc.

Corrosion Resistance Classifications

Simpson Strong-Tie fasteners feature a wide range of materials and coatings designed to meet specific performance criteria. It is important to select a material and/or coating that is suitable for the intended application and environment based upon factors such as corrosion resistance and mechanical properties of the material. See p. 12 for more information on selecting fasteners based upon corrosion resistance.

Simpson Strong-Tie Company Inc. welcomes the opportunity to provide assistance in fastener selection. Please call (800) 999-5099 in the event that technical support is needed.

Low Level of Corrosion Resistance

Clear Zinc
Electroplated clear zinc is applied in accordance with ASTM F1941. In the ASTM B117 salt spray test, clear zinc provides 12 to 24 hours of corrosion protection before the first appearance of red rust depending on coating thickness.

Electrocoating (E-Coat™)
Electrocoat utilizes electrical current to deposit the coating material onto the fastener. After application, the coating is oven cured. Electrocoat is intended for dry service, low-corrosion applications and is suitable for use with FRT in medium-corrosion, dry-service applications.

Gray Phosphate
Gray phosphate provides a minimum level of corrosion resistance and is intended for dry, low-corrosion applications.

Black Phosphate
Black phosphate provides a minimum level of corrosion resistance and is intended for dry, low-corrosion applications.

Yellow Zinc
Electroplated zinc applied in accordance with ASTM F1941. In the ASTM B117 salt spray test, yellow zinc provides at least 24 hours of corrosion protection before the first appearance of red rust.

Class 1 Zinc Electroplate
Electroplated zinc applied in accordance with ASTM A641, Class 1. This is an electroplated zinc coating that provides a low level of corrosion resistance. The Class 1 coating has no specified red rust performance criteria in the B117 salt spray test.

Type 410 Stainless Steel
Type 410 stainless steel is a low-carbon martensitic grade of stainless steel that can be hardened and is inherently magnetic. This material provides corrosion resistance in mild atmospheres and many mild chemical environments.

Coated Zinc
This coating system consists of an electroplated zinc base layer with an E-Coat top coat. It provides corrosion resistance that is adequate for low corrosion environments. In ASTM B117 salt spray testing at 500 hours of exposure, fasteners with this coating have an average red rust of less than 5%.

Medium Level of Corrosion Resistance

Quik Guard® Coating
Quik Guard coatings are proprietary coating systems that consist of an electroplated zinc base layer and organic top coats. The corrosion resistance is equivalent to hot-dip galvanization (ASTM A153, Class D) in some exposures and in most non-marine environments, and described by ICC-ES, AC257 Exposures 1 and 3.

Double-Barrier Coating
The Simpson Strong-Tie double-barrier coating is a proprietary coating that provides a level of corrosion resistance that is equivalent to hot-dip galvanization (ASTM A153, Class D) in most non-marine environments and as described by ICC-ES, AC257 Exposures 1 and 3.

Hot-Dip Galvanized, ASTM A153, Class D
The Class D hot-dip galvanization is a coating that meets the requirements of ASTM A153, Class D, which is a minimum average of 1.0 oz/ft^2 [305 g/m^2] of zinc applied by a hot-dip process. Hot-dip galvanized fasteners are compliant with the 2018 and 2021 IBC and IRC.

Mechanically Galvanized, ASTM B695, Class 55
This is a mechanically applied zinc coating that meets the requirements of ASTM B695, Class 55, which is a minimum average thickness of 55 microns with a supplementary overcoat. Screws with a Class 55 coating meet the requirements for use in preservative-treated and fire-retardant-treated wood as stated in the 2018 and 2021 IRC.

N2000® Mechanically Galvanized
This is a mechanically applied proprietary zinc coating with a supplementary overcoat. In the ASTM B117 salt spray test at 1000 hours of exposure, fasteners with the N2000 coating exhibit average red rust less than 15%.

C-3 Mechanically Galvanized
A mechanically applied coating that is zinc with a minimum of 20% tin in accordance with Australian Standard AS3566.2. In the ASTM B117 salt spray test at 1,000 hours of exposure, fasteners with the C3 coating exhibit average red rust of less than 2%.

C-F-2023TECHSUP © 2023 Simpson Strong-Tie Company Inc.

Corrosion Resistance Classifications

High Level of Corrosion Resistance

Types 304 and 305 Stainless Steel

Types 304 and 305 stainless steels are nickel-chromium austenitic grades of stainless steel. Types 304 and 305 stainless steels are not hardened by heat treatment and are inherently nonmagnetic.

They provide very good corrosion resistance and are suitable for use in many corrosive environments. Fasteners made from Types 304 and 305 stainless steels are compliant with the 2018 and 2021 IBC and IRC.

Severe Level of Corrosion Resistance

Type 316 Stainless Steel

Type 316 stainless steel is a nickel-chromium austenitic grade of stainless steel with 2-3% Molybdenum. Type 316 stainless steel is not hardened by heat treatment and is inherently nonmagnetic. It provides a level of corrosion protection suitable for severe environments, especially environments with chlorides. Type 316 stainless steel fasteners are compliant with the 2018 and 2021 IBC and IRC.

Hot-Dip Galvanized, ASTM A153, Class C

Class C hot-dip galvanization is a coating that meets the requirements of ASTM A153, Class C, which is a minimum average of 1.25 oz./ft.^{2} [381 g/m^2] of zinc applied by a hot-dip process. Hot-dip galvanized fasteners are compliant with the 2018 and 2021 IBC and IRC.

Passivation of Stainless-Steel Fasteners

Stainless steels are designed to naturally self-passivate by forming a chromium oxide layer. Corrosion resistance of some stainless-steel fasteners is enhanced by a post-fabrication passivation process. The passivation process uses an acid bath to strip free iron from the surface and an oxidizer to force conversion of the surface chromium to the oxide form.

General Note About Salt Spray Testing

Salt spray testing in accordance with ASTM B117 is not intended to represent real-world corrosion performance of fastener coatings. It should only be used for comparative evaluation between like products. Many variables may affect the outcome of the salt spray test such as base material, fastener features, coating and the material where it is installed.

C-F-2023TECHSUP © 2023 Simpson Strong-Tie Company Inc.

Nail Sizes

A common method used to represent nail sizes is the penny size, which is a length designation. The size is written with a number and the abbreviation "d" for "denarius" which is Latin for "penny." While referring to penny size and type designations such as "box" or "common" is a typical method for calling out nails, it is more accurate and reduces potential confusion if the nail is called out by diameter and length.

Note: Box, common and sinker nails may have the same length designation, but they have different diameters. See the American Wood Council, NDS 2018, Appendix L for diameters and lengths for structural nails of each type.

Construction Nails

Nail Type	Dimensions (inches and mm)[2,3]														
	Pennyweight	6d		7d		8d[1]		10d[1]		12d		16d[1]		20d	
	Feature	in.	mm	in.	mm	in.	mm	in.	mm	in.	mm	in.	mm	in.	mm
Common	Length	2	51	2¼	57	2½	63	3	76	3¼	82	3½	89	4	101
	Diameter	0.113	2.8	0.113	2.8	0.131	3.3	0.148	3.7	0.148	3.7	0.162	4.1	0.192	4.8
	Head	0.266	6.6	0.266	6.7	0.281	7.1	0.312	7.9	0.312	7.9	0.344	8.7	0.406	10.3
Box	Length	2	51	2¼	57	2½	63	3	76	3¼	82	3½	89	4	101
	Diameter	0.099	2.5	0.99	25.1	0.113	2.8	0.128	3.2	0.128	3.2	0.135	3.4	0.148	3.7
	Head	0.266	6.7	0.266	6.7	0.297	7.5	0.312	7.9	0.312	7.9	0.344	8.7	0.375	9.5
Sinker	Length	1⅞	47	2⅛	53	2⅜	60	2⅞	73	3⅛	79	3¼	82	3¾	95
	Diameter	0.092	2.3	0.099	2.5	0.113	2.8	0.120	3.0	0.135	3.4	0.148	3.7	0.177	4.4
	Head	0.234	5.9	0.250	6.3	0.266	6.7	0.281	7.1	0.312	7.9	0.344	8.7	0.375	9.5
Nail Type	**Feature**	—	—	—	—	**in.**	**mm**	**in.**	**mm**	**in.**	**mm**	**in.**	**mm**	—	—
Metal Hardware Nails[4]	Length	—	—	—	—	1½	38	1½	38	2½	63	2½	63	—	—
	Diameter	—	—	—	—	0.131	3.3	0.148	3.7	0.148	3.7	0.162	4.1	—	—
	Head	—	—	—	—	0.285	7.2	0.285	7.2	0.285	7.2	0.285	7.2	—	—

See footnotes below.

Construction Nails (cont.)

Nail Type	Dimensions (inches and mm)								
	Pennyweight	30d		40d		50d		60d	
	Feature	in.	mm	in.	mm	in.	mm	in.	mm
Common	Length	4½	114	5	127	5½	139.7	6	152.4
	Diameter	0.207	5.2	0.225	5.7	0.244	6.1	0.263	6.6
	Head	0.438	11.1	0.469	11.9	0.5	12.7	0.531	13.4
Box	Length	4½	114	5	127	—	—	—	—
	Diameter	0.148	3.7	0.162	4.1	—	—	—	—
	Head	0.375	9.5	0.406	10.3	—	—	—	—
Sinker	Length	4¼	107	4¾	120.6	—	—	5¾	—
	Diameter	0.192	4.8	0.207	5.2	—	—	0.244	—
	Head	0.406	10.3	0.438	11.1	—	—	0.5	—
Nail Type	**Feature**	—	—	—	—	**in.**	**mm**	—	—
Metal Hardware Nails[6]	Length	—	—	—	—	2½	63	—	—
	Diameter	—	—	—	—	0.25	6.3	—	—
	Head	—	—	—	—	0.5	12.7	—	—

1. Collated Strong-Drive® SCN Smooth-Shank and SCNR Ring-Shank connector nails have a 0.281"-diameter head for 8d, 10d and 16d sizes.
2. Dimensions for box, common and sinker nails per AWC/NDS, Table L4.
3. Diameter is shank diameter and Head is head diameter.
4. Dimensions per ASTM F1667.
5. Tolerances are specified in ASTM F1667.
6. Per Simpson Strong-Tie specifications.

Steel Wire Gauge/Diameter

Gauge	in.	mm
3	0.259	6.57
4	0.238	6.05
6	0.203	5.16
8	0.162	4.12
9	0.148	3.76
10	0.131	3.33
11	0.120	3.05
12	0.113	2.85
13	0.092	2.34
14	0.083	2.11
15	0.072	1.83
16	0.065	1.65
18	0.049	1.25
23	0.026	0.66

1. Table based on Birmingham or Stub's Iron Wire Gauge.

C-F-2023TECHSUP © 2023 Simpson Strong-Tie Company Inc.

Fastener Overview, Nails

Nail Types

Box: Bright, coated, plain-shank nail or regular stock steel with flat round head and medium diamond point. Shank diameter is smaller than common nails of the same penny weight.

Brads: A common term used for nails less than 1¼" in length with a head slightly larger than the shank. These nails can be easily concealed by countersinking below the work surface.

Casing: A wire nail with a head that is only slightly larger head than a finish nail, often used for flooring.

Common: Bright plain-shank nail of regular stock steel with flat round head and medium diamond point. Shank diameter is larger than box nails of the same penny size.

Connector: A wire nail with a concentric, full, round head and diamond point. The shank can be either deformed with annular rings or smooth.

Finishing: A wire nail with a head that is only slightly larger than the shank and medium diamond point. These nails can be easily concealed by countersinking below the work surface.

Post-Frame Ring Shank: A wire nail with a concentric, full, round head and 2.25 to 3 inches of shank length that is deformed with annular rings. The annular rings have over-shank diameter of 0.005 to 0.010 inch and the pitch is 20 rpi.

Roofing: A nail used for attaching paper or shingles to roof battens or sheathing; usually with a large flat head.

Roof Sheathing Ring Shank: A wire nail with a concentric, full, round head and at least 1.5 inches of shank length deformed with annular rings. The annular rings have over-shank diameter of 0.005 to 0.012 inch and the pitch is 13 to 20 rpi.

Siding: A wire nail with a shank that is typically 0.099" or less in diameter and a smaller head than other nails of the same size to help conceal the fastener after installation.

Sinker: A 16d sinker is a 0.148" x 3¼" coated framing nail.

Nail Shank Types

Smooth Shank: There are no deformations on the shank, making nails with a smooth shank the easiest to drive. Smooth shank nails offer the least pullout resistance when compared with spiral and ring shanks.

Spiral Shank: A spiral "thread" on the shank causes the nail to spin during installation, creating a thread-like interlock with the wood, which increases withdrawal capacity. Spiral-shank nails are designed to drive easier into harder woods and dense materials while still providing increased withdrawal resistance.

Annular Ring Shank: Annular threads or "rings" are formed on the shank to increase withdrawal capacity. The "rings" create an interlock between the shank of the nail and the wood, providing superior holding power. Generally considered the nail type with the best withdrawal resistance.

Smooth Shank

Screw Shank

Annular Ring Shank

Nail Head Types

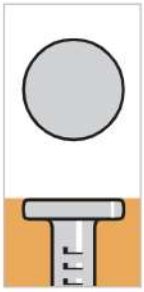

Flat Head

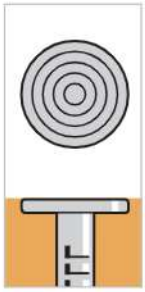

Flat Head with Concentric Ring Texture

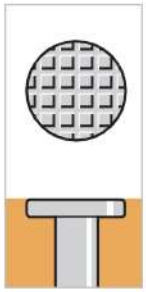

Flat Head with Checkered Texture

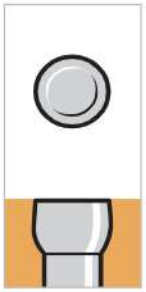

Finish Head

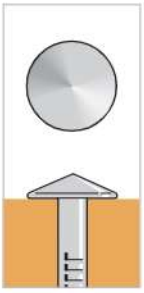

Pyramid Head

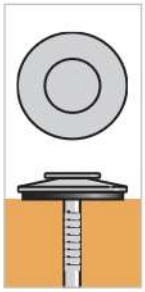

Flat Head with Bonded Washer

Flat Head with EPDM Washer

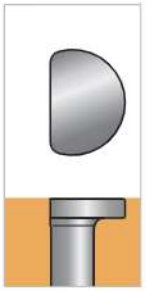

Clipped D-Head

C-F-2023TECHSUP © 2023 Simpson Strong-Tie Company Inc.

Fastener Overview, Screw Features

Head Styles

Flat Head

Flat Head with Nibs

Ribbed Flat Head

Bugle Head

Trim Head

Trim Head with Nibs

Cap Head

Ribbed Wafer Head

Modified Truss Head

Pan Head

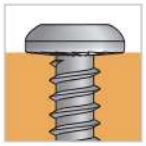
Flat-Pan Head

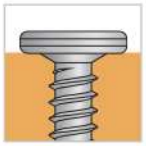
Pancake Head

Wafer Head

Combo Head (hex head with 6-lobe recess)

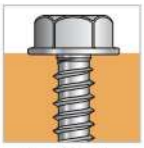
Hex-Washer Head

Ultra-Low Profile Pancake Head

Washer Head

Rimmed Flat Head with Nibs

Box-Shape Cutter Head

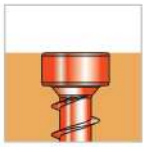
Cap-Style/ Cylinder Head

Compact Head

Washer Head with Box Nib

Thread Styles

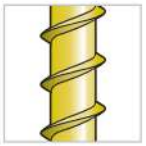
Coarse Threads

Twin Threads

Metal Tapping Threads

Box Threads

High-Low Threads

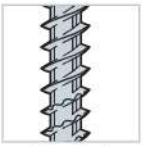
Serrated Threads

Reverse Threads

Knurls

Point Styles

Paddle Point
Application: Hardwood

SawTooth®
Application: Wood

Sharp Point with Nib
Application: Wood, composite

Sharp Point
Application: Wood and thin metal

Type-17 Point
Application: Wood, composite and thin metal

Drill Point
Application: Metal
(see p. 18 for more information)

Drill Point with Wings
Application: Wood to metal

Pilot Point
Application: Wood to metal

Heavy-Duty Pilot Point
Application: Wood/sheathing to metal

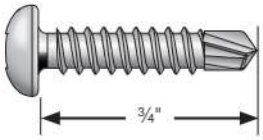

Measure pan, pancake, truss, washer, wafer head, combo head and hex-head screws from under head to point

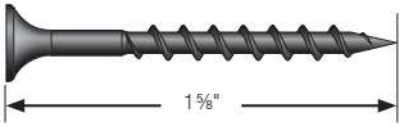

Measure all other screws from top of head to point

C-F-2023TECHSUP © 2023 Simpson Strong-Tie Company Inc.

How Self-Drilling Screws Work

Application

As their name implies, self-drilling screws operate on the same principles as drill bits and other cutting tools. For any cutting tool, performance is governed by cutting speed, feed rate, depth of cut and the work material itself. Therefore, installation performance of self-drilling screws can be linked to the basic cutting tool parameters. Suggested optimal parameter values are listed by nominal screw size in the table below.

Point Geometry is the designed shape of the screw's drill point.

RPM is the speed at which the driver motor runs while the screw is installed. This is often adjustable using a variable pull trigger or different driver motor.

Applied Force is a measure of the user applied force as the screw is installed. More force is not necessarily better.

Work Material Hardness can be viewed as a material's resistance to drilling or cutting. In most instances, the harder the work material, the more difficult it is to cut.

Optimal Cutting Conditions by Screw Size

Screw Size	Major Diameter (in.)	RPM*	Applied Force* (lb.)	Work Material Hardness*
#6	0.138	2,200	80	20 Rockwell "C"-scale
#8	0.164	1,900	93	
#10	0.190	1,600	104	
#12	0.216	1,400	116	
#14	0.250	1,200	131	
#16	0.313	1,000	157	

*Suggested combined maximum values. Individual values may be increased if other, associated variables are decreased proportionally. Stated speeds may require a variable-speed screwdriver motor and a partial trigger-pull.

Special Considerations

Drill-Point Material is generally plain carbon steel which is less stable at high temperatures than equivalent high-speed steel (HSS) drill-bits. To reduce wear on the drill point, fasten using a drill motor rather than an impact driver or hammer drill.

High Temperature Stability affects how quickly the drill point fails due to the heat generated by the drilling operation. Refer to the troubleshooting guide at the end of this section for some visual examples.

Drilling Temperature is directly proportional to motor RPM, applied force, and work material hardness. As each value increases, so does the heat generated by the drilling operation.

Reducing Applied Force can increase durability and allow the drill point to penetrate thicker materials (i.e., remove more material before failing due to heat buildup).

Reducing Motor RPM can improve performance in harder materials by allowing the user to push harder during the drilling process and extending the life of the drill point.

Design Features

When selecting a self-drilling screw, consider the material thicknesses and types of materials to be joined. Following are some key design features to look for when selecting suitable fasteners.

Drill Flutes allow drilled material to exit the hole. Completely embedded flutes can no longer remove these chips, which contain approximately 80% of the heat created by the drilling process. A buildup of this material can cause the point to over-heat and fail.

Point Length determines the material thickness which the screw can reliably penetrate. The unthreaded portion of the point, (pilot section) must be able to completely drill through the material before the threads engage. If the threads engage before drilling is complete, the fastener can bind and break.

Point Wings are used on some screws that fasten thicker materials, such as wood, to metal. The wings enlarge the hole in the fastened material, allowing the threads to pass through without contacting the fastened material. This added clearance prevents separation of the fastened material from the base metal (known as "jacking"). The wings will break away on contact with the metal before the threads engage in the metal.

Basic Self-Drilling Screw Anatomy

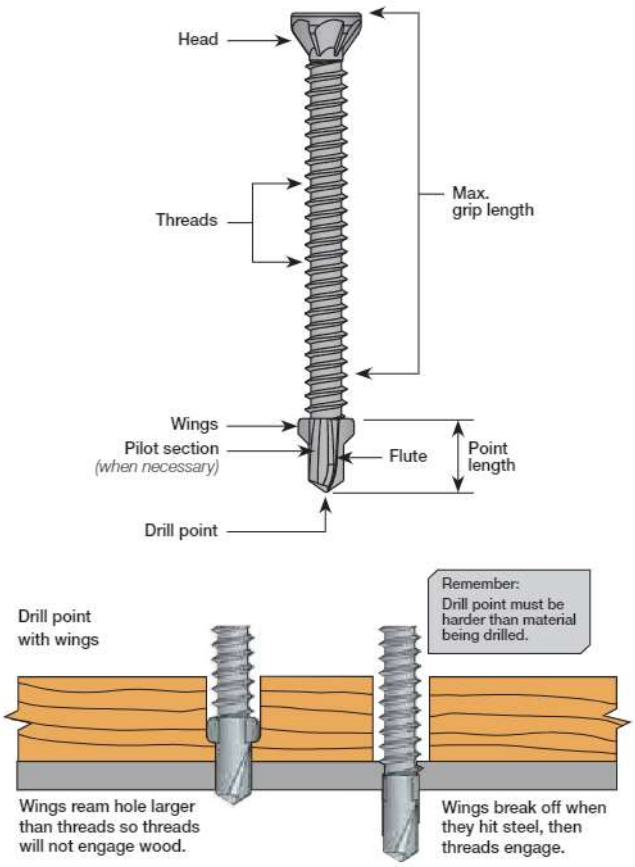

C-F-2023TECHSUP © 2023 Simpson Strong-Tie Company Inc.

How Self-Drilling Screws Work

Work Material Thickness by Screw

Screw Point Type	Screw Size	Suitable Material Thickness[1] (in.)
#2	#6	0.035 – 0.100
	#8	0.035 – 0.100
	#10	0.035 – 0.100
#3, #5	#8	0.100 – 0.140
	#10	0.110 – 0.175
	#12	0.110 – 0.210
#3	#14	0.110 – 0.220
#4	#12	0.175 – 0.250
	#14	0.175 – 0.250
#5	#14	0.250 – 0.500

1. Total thickness of all steel, including any spacing between layers.

Cold-Formed Steel Thicknesses for Framing Applications

Gauge[1]	Mil[2]	Design Thickness		Minimum Thickness	
		(in.)	(mm)	(in.)	(mm)
25	18	0.0188	0.48	0.0179	0.45
22	27	0.0283	0.72	0.0269	0.68
20 (Drywall)	30	0.0312	0.79	0.0296	0.75
20 (Structural)	33	0.0346	0.88	0.0329	0.83
18	43	0.0451	1.15	0.0428	1.09
16	54	0.0566	1.44	0.0538	1.37
14	68	0.0713	1.81	0.0677	1.72
12	97	0.1017	2.58	0.0966	2.45

1. For reference only.
2. One "mil" is 1/1,000 (0.001) of an inch. Mil thickness measures the uncoated base material.

Self-Drilling Screw Troubleshooting Guide

Failure Mode	Likely Cause(s)	Suggested Action
Split at point (web)	Excessive force (feed) applied while drilling	Reduce application force
Outer corners worn or melted	Drill RPM (cutting speed) too high	Use slower motor or partial trigger pull
Cutting edges chipping or breaking	Excessive force (feed) applied while drilling	Reduce application force
Point melted or diameter significantly reduced	• Work material too hard • Insufficient chip clearance • Excessive force (feed) applied while drilling	• Confirm work material specs • Choose screw with longer pilot section • Reduce application force
Screw spins without drilling a hole	• Drill motor set on reverse • Work material too hard • Drill point blunted by handling	• Check motor direction • Confirm work material specs • Inspect unused drill points for possible damage (from handling)

C-F-2023TECHSUP © 2023 Simpson Strong-Tie Company Inc.

Fastener Overview/Screw Head Pull-Through

The calculation of allowable pull-through resistance is described in AWC NDS-2018, Section 12.2.5, and the calculation follows equations 12.2-6a and 12.2-6b depending on the relationship of fastener head diameter to side member thickness. The NDS functions assume that the fastener head is concentric to the shank, is full-round in plane shape, and is flat on the wood-bearing surface.

Simpson Strong-Tie evaluated the pull-through resistance of Strong-Drive® screws with washer heads, hex washer heads and flat heads in dimensional lumber. The pull-through testing included head geometry, thickness of side member and wood-specific gravity for screws that are partially threaded. Engineering analysis showed that pull-through of washer heads and hex washer head screws perform at least as good as the NDS calculations. At the same time, the flat-head geometry underperforms the NDS pull-through functions because of the underhead geometry that is continuously angled from the shank to the top surface of the head. See table below for appropriate factors to be applied to the calculated allowable pull-through resistance.

Simpson Strong-Tie Strong-Drive Screw Head Geometries and Adjustment Factors for Pull-Through Calculations Following the NDS

Head Geometry	Strong-Drive Screw Examples	Illustration	Pull-Through Adjustment Factor[1]	
			DF/SP	SPF/HF
Washer head	SDWS Timber Screws (Interior and Exterior Grade)		1.0	1.0
Hex washer head	SDS Heavy-Duty Connector Screws	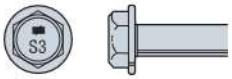	1.0	1.0
Flat head	SDCP Timber-CP Screws		0.8	0.6

1. Apply adjustment factors to NDS 2018 equations 12.2-6a and 12.2-6b, as appropriate.
The calculation of allowable pull-through resistance is described in AWC NDS-2018, Section 12.2.5, and the calculation follows equations 12.2-6a and 12.2-6b depending on the relationship of fastener head diameter to side member thickness. The NDS functions assume that the fastener head is concentric to the shank, is full-round in plane shape, and is flat on the wood-bearing surface.

C-F-2023TECHSUP © 2023 Simpson Strong-Tie Company Inc.

Fastener Types and Sizes Specified for Simpson Strong-Tie Connectors

Many Simpson Strong-Tie connectors have been designed and tested for use with specific types and sizes of fasteners. The specified quantity, type and size of fastener must be installed in the correct holes on the connector to achieve published loads. Other factors such as fastener material and finish are also important. Incorrect fastener selection or installation can compromise connector performance and could lead to failure. For more information about fasteners, see our *Fastening Systems* catalog at **strongtie.com** or access our Fastener Finder software at **strongtie.com/software**.

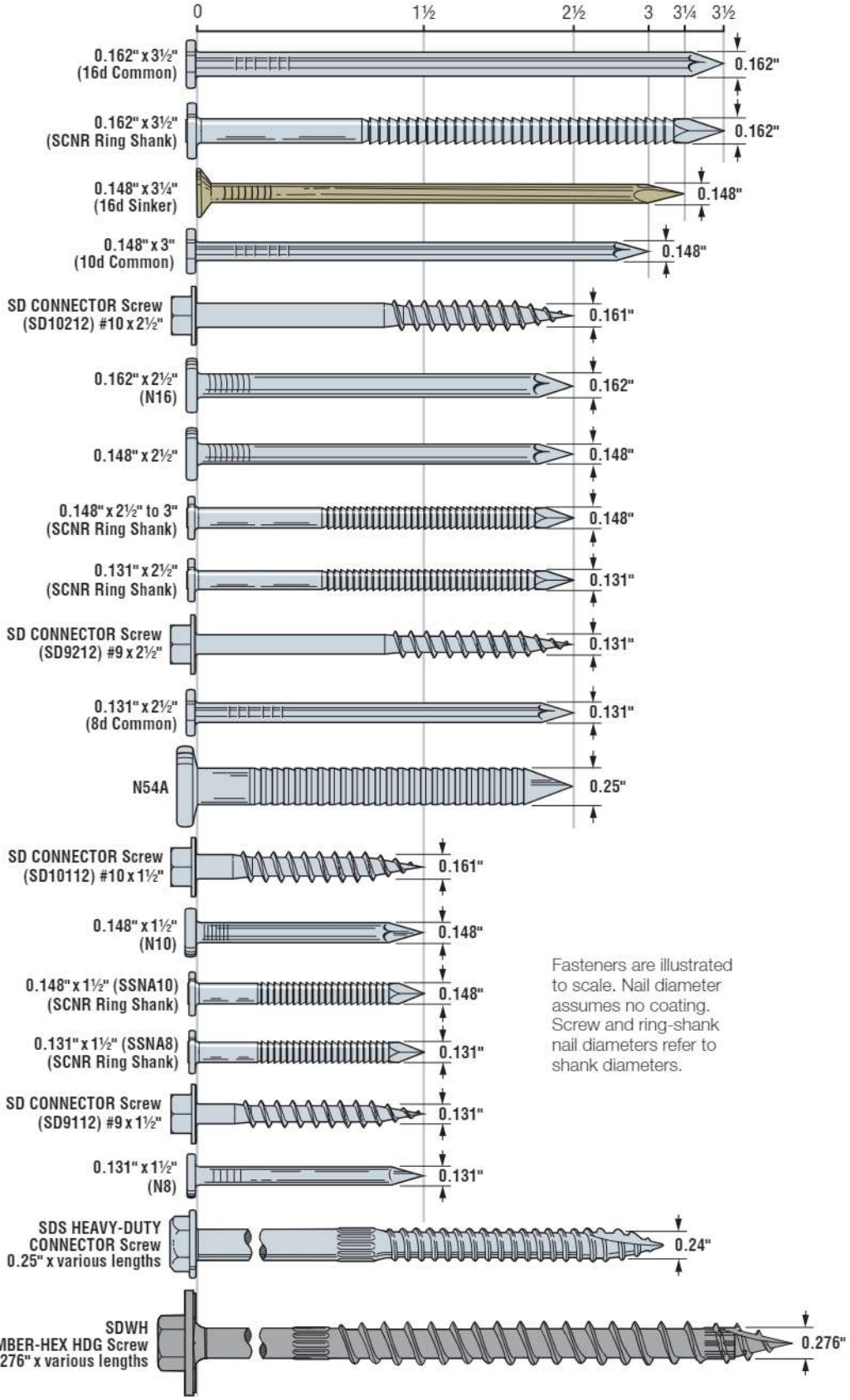

Fasteners are illustrated to scale. Nail diameter assumes no coating. Screw and ring-shank nail diameters refer to shank diameters.

The Simpson Strong-Tie Strong-Drive® Connector screw is the only screw that is approved as an alternate to nails with our connectors.

The allowable loads of stainless-steel connectors match those of carbon-steel connectors when installed with Simpson Strong-Tie stainless-steel, SCNR ring-shank nails. For more information, refer to engineering letter L-F-SSNAILS at **strongtie.com.**

C-F-2023TECHSUP © 2023 Simpson Strong-Tie Company Inc.

General Load Tables

Screw Strength

Model No.	Size x Length	Nominal Strength (lb.)		Load Resistance Factor Design (LRFD) (lb.)		Allowable Stress Design (ASD) (lb.)	
		Shear	Tension	Shear	Tension	Shear	Tension
		P_{ss}	P_{ts}	ϕP_{ss}	ϕP_{ts}	P_{ss}/Ω	P_{ts}/Ω
Steel to Steel							
FPHSD34S1016	#10 x ¾"	1,710	2,215	855	1,110	570	740
FPHSD34S1214	#12 x ¾"	2,535	3,380	1,265	1,690	845	1,125
PHSD34S0818	#8 x ¾"	1,495	1,810	750	905	500	605
E1B1414	#14 x 1"	3,130	5,395	1,565	2,700	1,045	1,800
XEQ34B1016	#10 x ¾"	1,390	2,350	695	1,175	465	785
Steel Decking							
XU34S1016	#10 x ¾"	1,735	2,895	870	1,450	580	965
X1S1016	#10 x 1"	1,625	2,930	810	1,465	540	975
X1S1214	#12 x 1"	2,525	3,750	1,265	1,875	840	1,250
XMQ114S1224	#12 x 1¼"	3,110	4,985	1,555	2,495	1,035	1,660
XLQ114T1224	#12 x 1¼"	3,110	4,985	1,555	2,495	1,035	1,660
Metal-Roofing Clip to Steel							
PCSD1S1016	#10 x 1"	1,705	2,380	850	1,190	570	795
PCSD1S1214	#12 x 1"	1,760	3,180	880	1,590	585	1,060
SSPCSD1S1016	#10 x 1"	1,892	3,045	985	1,588	631	1,015
Metal-Roofing Clip to Wood							
PC1BS1012	#10-12 x 1"	1,415	2,080	710	1,040	470	695
PC1BS1211	#12-11 x 1"	1,715	3,080	860	1,540	570	1,025
Drywall							
DWF114PS	#6 x 1¼"	1,255	1,575	630	790	420	525
DWF158PS	#6 x 1⅝"	1,255	1,575	630	790	420	525
DWFSD158PS	#6 x 1⅝"	1,260	1,720	630	860	420	575
DWFSDQ114PS	#6 x 1¼"	1,260	1,720	630	860	420	575
DWFSD178PS	#6 x 1⅞"	1,260	1,720	630	860	420	575
DWFSD238PS	#8 x 2⅜"	1,260	1,720	630	860	420	575
Wood to Steel							
FHSD114S0818	#8 x 1¼"	1,221	1,884	637	983	407	628
SSFHSD112S1016	#10 x 1½"	2,275	3,435	1,140	1,720	760	1,145
PPHD11516S0817	#8 x 1 15/16"	1,265	2,075	630	1,035	420	690
PPHD134S1016	#10 x 1¾"	1,265	2,675	630	1,335	420	890
PPHD3S1016	#10 x 3"	1,265	2,675	630	1,335	420	890
PPHD134S1214	#12 x 1¾"	2,380	3,880	1,190	1,940	795	1,295
CBSDQ158S	#8 x 1⅝"	1,745	2,500	870	1,250	580	835
CBSDQ214S	#10 x 2¼"	2,205	3,295	1,105	1,650	735	1,100
TB1445S	#14 x 1¾"	3,690	4,625	1,845	2,315	1,230	1,540
TB1460S	#14 x 2⅜"	3,690	4,625	1,845	2,315	1,230	1,540
TB1475S	#14 x 3"	3,690	4,625	1,845	2,315	1,230	1,540

1. Table based on testing per AISI Standard Test Method S904-08.
2. Factor of Safety (Ω), and Resistance Factor (ϕ) are determined per AISI S100-12 Section F1.
3. P_{ss} and P_{ts} are nominal shear strength and nominal tension strength values for the screw, respectively, and are also known as the average (ultimate) values of all tests; determined by independent laboratory testing.

C-F-2023TECHSUP © 2023 Simpson Strong-Tie Company Inc.

Fasteners for Use with Alternate Lumber Species

The American Wood Council (AWC) provides structural properties for North American and non-North American visually graded dimension lumber in Chapter 4 of the National Design Specification (NDS) Supplement, 2018 Edition. With few exceptions, Simpson Strong-Tie has evaluated its wood construction connectors and fasteners for use with North American Douglas Fir–Larch (DF), Southern Pine (SP), Spruce-Pine-Fir (SPF), and Hem-Fir (HF) and their corresponding structural properties, which can vary substantially from alternate species listed in the NDS Supplement.

When evaluating capacities of Simpson Strong-Tie fasteners for use with one of the alternate wood species listed in Chapter 4 of the NDS Supplement, a designer or Engineer of Record applies the adjustment factor determined in accordance with Table 1 to the corresponding product's allowable loads published by Simpson Strong-Tie.

Table 1. Adjustment Factor for Fasteners Installed with Alternate Lumber Species

Allowable Load Type	Specific Gravity, G, of Alternate Lumber Species			
	$0.42 < G < 0.50$	$G \geq 0.50$	$0.31 \leq G < 0.42$	$G = 0.42$
	Use Published Loads for DF and/or SP		Use Published Loads for SPF and/or HF	
Lateral Load	0.86	1.00	0.81	1.00
Withdrawal Load			0.66	

Where G = Specific gravity for the alternate lumber species used, per NDS Supplement Chapter 4.
Note: Adjustment factors shall not be greater than 1.00.

Wood Species Combinations in the Specific Gravity Range 0.35 to 0.41

Wood Species	Specific Gravity[1]
Alaska Spruce	0.41
Aspen	0.39
Balsam Fir	0.36
Coast Sitka Spruce	0.39
Cottonwood	0.41
Eastern Hemlock	0.41
Eastern Hemlock-Balsam Fir	0.36
Eastern Hemlock-Tamarack	0.41
Eastern Softwoods	0.36
Eastern Spruce	0.41
Eastern White Pine	0.36
Engelmann Spruce-Lodgepole Pine	0.38
Northern Species	0.35
Redwood, open grain	0.37
Spruce-Pine-Fir (South)	0.36
Western Cedars	0.36
Western Cedars (North)	0.35
Western White Pine	0.40
Western Woods	0.36

1. Specific gravity as assigned in NDS-18 Table 12.3.3A.

C-F-2023TECHSUP © 2023 Simpson Strong-Tie Company Inc.

Safety Data Sheets (SDS)

For Fasteners

Simpson Strong-Tie Company Inc. manufactures and sells fasteners, metal connectors and mechanical concrete anchors. Fastener products include and are not limited to nails, screws, staples, deck clips and deck plugs. Metal connectors include and are not limited to hangers, holdowns, clips, ties, straps and truss plates. Mechanical concrete anchor products include and are not limited to drop-ins, screws, drive pins and various mechanical anchors. For the purpose of hazard communication, fastener products, connector products and mechanical concrete anchor products are "Articles" as defined in 29 CFR 1910.1200(c), "Article means a manufactured item other than a fluid or particle: (i) which is formed to a specific shape or design during manufacture; (ii) which has end-use function(s) dependent in whole or in part upon its shape or design during end use; and (iii) which under normal conditions of use does not release more than very small quantities, e.g., minute or trace amounts of a hazardous chemical (as determined under paragraph (d) of this section), and does not pose a physical hazard or health risk to employees." As Articles, fastener products, connector products and mechanical concrete anchor products are exempt from Material Safety Data Sheet (MSDS/SDS) requirements under the Hazard Communication Standard (29 CFR 1910.1200(b)(6)(v)). For this reason, Simpson Strong-Tie does not have available MSDS/SDS sheets for its fastener products, connector products and mechanical concrete anchor products.

Fastener Finder

Find the Right Fastener for Your Job — Fastener Finder App

Explore our extensive array of screws, nails and specialty fasteners to find the exact product you need in seconds. Search by multiple criteria, such as application, type and model number.

Features:

- Thumbnails, for more information about product options
- Easily share links to a specific set of results
- Mobile-friendly design
- New selection of penny size options to choose from

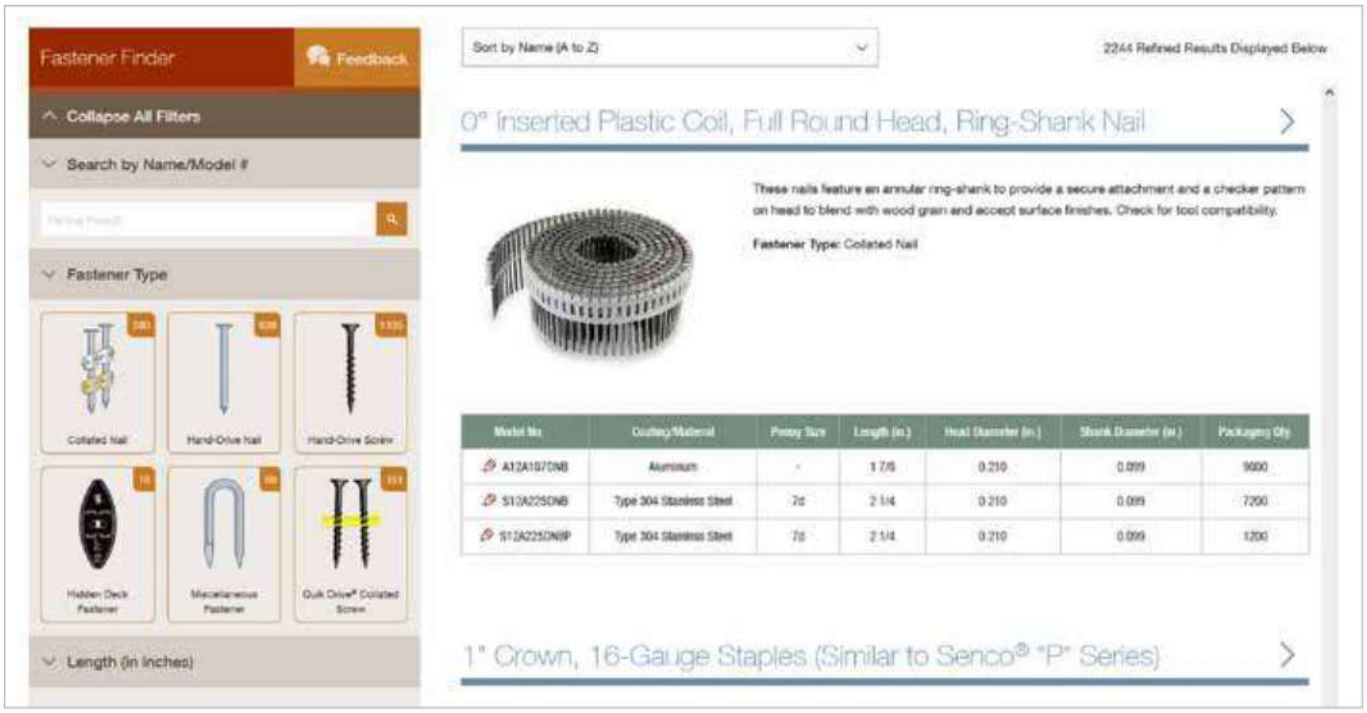

C-F-2023TECHSUP © 2023 Simpson Strong-Tie Company Inc.

Select the Right Fastener for Your Job — Fastener Designer App

The Fastener Designer web-based application is a quick, easy-to-use tool for providing Simpson Strong-Tie structural screw alternatives to specified standard NDS fasteners in withdrawal, lateral load parallel-to-grain, lateral load perpendicular-to-grain, ledger and multi-ply connections. The Fastener Designer web-based application provides detailed load calculations for both the NDS fasteners and recommended Simpson Strong-Tie structural screws. See **strongtie.com/webapps/fastenerdesigner** for more information.

Select fasteners based on:

- Withdrawal loading
- Lateral loads, parallel or perpendicular to grain
- Multi-ply connections
- Corrosion resistance
- Ledger connections

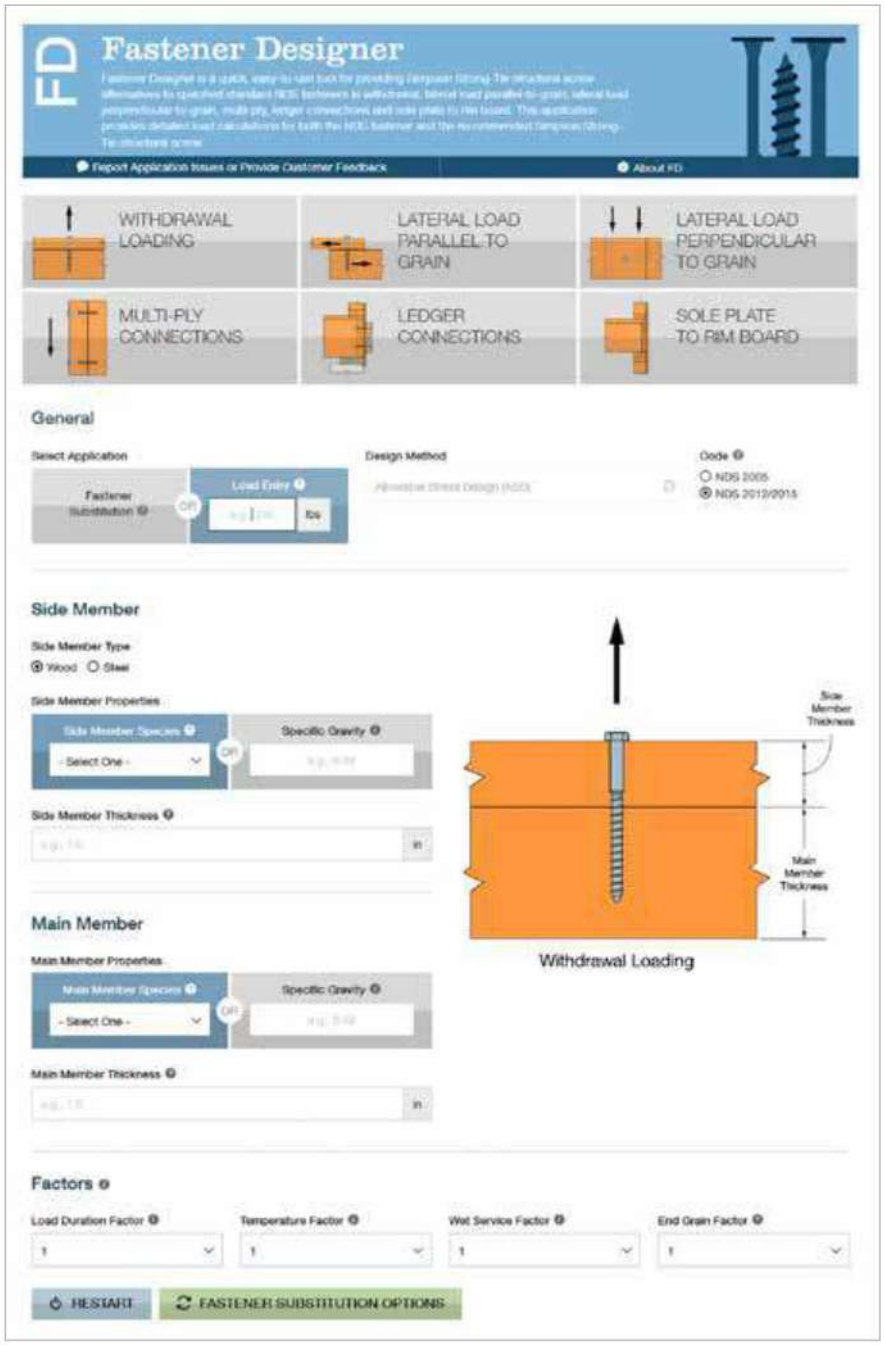

Fastener Designer App — Withdrawal Loading Input Screen

C-F-2023TECHSUP © 2023 Simpson Strong-Tie Company Inc.

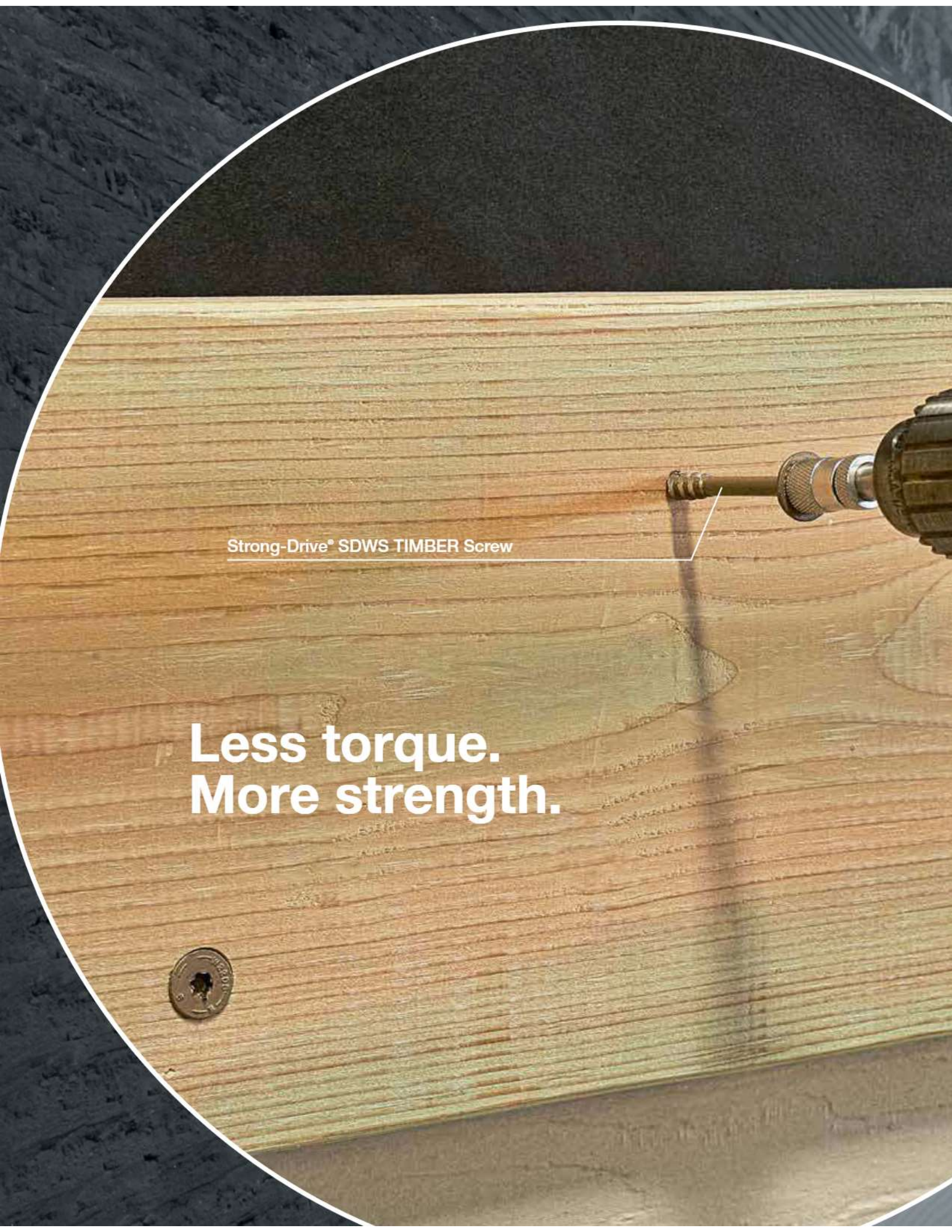
Strong-Drive® SDWS TIMBER Screw
Less torque.
More strength.

SIMPSON Strong-Tie

Wood and Engineered Wood Fastening

Structural and General Fastening
Mechanical Properties of Strong-Drive® and Deck-Drive™ Screws . 28
Wafer-Head Construction Screw 33
Finish Trim Screw 34
Deck-Drive™ DSV WOOD and CSV CONSTRUCTION Screws 35
Strong-Drive® SDWS TIMBER Screw (Exterior Grade) 37
Strong-Drive® SDWS FRAMING Screw 41
Deck-Drive™ DSV WOOD Screw 45
Strong-Drive® SDWV SOLE-TO-RIM Screw 47
Strong-Drive® DWP WOOD SS Screw 49
Strong-Drive® SDWS TIMBER SS Screw 51
Strong-Drive® SDWS TIMBER Screw (Interior Grade) 53
Strong-Drive® SDWH TIMBER-HEX Screw 58
Strong-Drive® SDWH TIMBER-HEX HDG Screw 62
Strong-Drive® SDWH TIMBER-HEX SS Screw 64
Strong-Drive® SD CONNECTOR Screw 66
Strong-Drive® SD CONNECTOR SS Screw 68
Strong-Drive® SDS HEAVY-DUTY CONNECTOR Screw 70

Ledger Structural Fastening Applications
Strong-Drive® SDWS TIMBER Screw (Exterior Grade) 72
Strong-Drive® SDWH TIMBER-HEX Screw 75
Strong-Drive® SDS HEAVY-DUTY CONNECTOR Screw 78
Strong-Drive® SDWS TIMBER Screw 79

Exterior Foam-to-Wood Fastening
Strong-Drive SDWS TIMBER Screw 80

Rafter/Truss/Plate Fastening
Strong-Drive SDWC TRUSS Screw 82
Quik Stik™ Rafter and Truss Fastening System 98

Non-Load-Bearing Wall to Truss/Joint Fastening
Strong-Drive® SDPW DEFLECTOR Screw 103

Sole/Top Plate-to-Rim Fastening
Strong-Drive® SDWC TRUSS Screw 106
Strong-Drive® SDWV SOLE-TO-RIM Screw 107
Strong-Drive® SDWS TIMBER Screw 108
Strong-Drive® SDWH TIMBER-HEX Screw 109
Strong-Drive® SDWS TIMBER Screw and
SDWH TIMBER-HEX Screw 110
Strong-Drive® SDS HEAVY-DUTY CONNECTOR Screw 112

Floor-to-Floor Fastening
Strong-Drive® SDWF FLOOR-TO-FLOOR Screw 113

Subfloor and Sheathing Fastening
Strong-Drive® WSV SUBFLOOR Screw 122

Multi-Ply Fastening
Strong-Drive® SDW TRUSS-PLY and EWP-PLY Screws 125
Strong-Drive® SDWS TIMBER Screw 132
Strong-Drive® SDW TRUSS-PLY and SDWS TIMBER Screws . . . 133
Strong-Drive® WSV SUBFLOOR Screw 136

Mass Timber/CLT Fastening
Strong-Drive® SDHR Combo-Head Screw 138
Strong-Drive® SDCF TIMBER-CF Screw 140
Strong-Drive® SDCF TIMBER-CF and SDCP TIMBER CP Screws 144
Structural Screw Applications 145

Dimensions and Mechanical Properties of Strong-Drive® and Deck-Drive™ Screws for Wood and Engineered Wood

Model No.	Dimensions[a]						Strengths		
	Length	Thread Length	D	D_r	D_s	D_h	Bend Yield, F_{yb} (ksi)	Tension (lb.)	Shear (lb.)
DSV212/CSZV212	2.5	1.5	0.183	0.126	0.135	0.333	170	—	—
DSV3/CSV3	3	1.5							
DSV312	3.5	2							
DSV4	4	2.5							
T12300WP	3	2.2	0.224[b]	0.152	0.167	0.440	80[c]	605	—
T12350WP	3.5	2.5							
T12400WP	4	2.8							
T12450WP	4.5	3.2							
T12500WP	5	3.5							
T12600WP	6	4							
T14300WP	3	2.1	0.25[b]	0.173	0.187	0.460	80[c]	775	—
T14350WP	3.5	2.3							
T14400WP	4	2.8							
T14500WP	5	3.5							
T14600WP	6	4.2							
ER-262									
SDWC15450	4.5	4.25	0.235	0.152	—	0.327	195	1,160	815
SDWC15600	6	5.75							
ER-192									
SDW22300	2.94	1.438	0.315	0.203	0.221	0.750	180	1,550	1,125
SDW22338	3.34	1.563							
SDW22438	4.375	1.438							
SDW22458	4.585	1.438							
SDW22500	5.04	1.563							
SDW22600	5.94	1.438							
SDW22638	6.315	1.438							
SDW22634	6.74	1.563							
SDWS22300DB	3	1.5	0.315	0.203	0.221	0.750	160	1,505	910
SDWS22312DBB	3.5	2							
SDWS22400DB	4	2.375							
SDWS22500DB	5	3							
SDWS22512DBB	5.5	3							

See footnotes on p. 32.

C-F-2023TECHSUP © 2023 Simpson Strong-Tie Company Inc.

Dimensions and Mechanical Properties of Strong-Drive® and Deck-Drive™ Screws for Wood and Engineered Wood (cont.)

Model No.	Dimensions[a]						Strengths		
	Length	Thread Length	D	D_r	D_s	D_h	Bend Yield, F_{yb} (ksi)	Tension (lb.)	Shear (lb.)
ER-192 (cont.)									
SDWS22600DB	6	3	0.315	0.203	0.221	0.75	175	1,575	1,055
SDWS22800DB	8	3							
SDWS221000DB	10	3							
SDWH19300DB	3	1.5	0.275	0.182	0.199	0.64	165	1,210	770
SDWH19400DB	4	2.375							
SDWH19600DB	6	2.77					175	1,245	780
SDWH19800DB	8	2.77							
SDWH191000DB	10	2.77							
SDWS22400	4	2.375	0.315	0.203	0.221	0.75	160	1,505	910
SDWS22500	5	3							
SDWS22512	5.5	3							
SDWS22600	6	3	0.315	0.203	0.221	0.75	175	1,575	1,055
SDWS22800	8	3							
SDWS22900	9	3							
SDWS221000	10	3							
SDWS221100	11	3							
SDWS221200	12	3							
SDWS221500	15	3							
SDWS19600	6	3	0.275	0.182	0.199	0.640	175	1,245	780
SDWS19712	7.5	3							
SDWH27400G	4	3	0.398	0.245	0.276	0.910	146	2,050	1,465
SDWH27600G	6	3							
SDWH27800G	8	3							
SDWH271000G	10	3							
SDWH271200G	12	3							
SDWS14350	3.5	2	0.204	0.124	0.142	0.550	200	690	475
SDWS14500	5	2							
SDWS16212	2.4	1.125	0.216	0.145	0.159	0.435	175	920	570
SDWS16300	2.9	1.625							
SDWS16312	3.5	2.0							
SDWS16400	4.0	2.5							
SDWS25200DBB	2	1.25	0.256	0.188	0.239	0.750	200	1,665	1,055

See footnotes on p. 32.

C-F-2023TECHSUP © 2023 Simpson Strong-Tie Company Inc.

Dimensions and Mechanical Properties of Strong-Drive® and Deck-Drive™ Screws for Wood and Engineered Wood (cont.)

Model No.	Dimensions[a]						Strengths		
	Length	Thread Length	D	D_r	D_s	D_h	Bend Yield, F_{yb} (ksi)	Tension (lb.)	Shear (lb.)
ESR-3046									
SDHR27400	3.94	2.17	0.394	0.242	0.28	0.587	190	2,500	1,680
SDHR27614	6.3	4.33							
SDHR31400	3.94	2.17	0.472	0.264	0.319	0.665	200	3,075	2,150
SDHR31614	6.3	4.33							
SDCP22318	3.15	1.97	0.309	0.208	0.228	0.577	185	2,045	1,335
SDCP22434	4.72	3.15	0.309	0.208	0.228	0.577	185	2,045	1,335
SDCP22512	5.51								
SDCP22614	6.3								
SDCP22700	7.09								
SDCP22858	8.66								
SDCP22912	9.45								
SDCP221100	11.02								
SDCP221134	11.81								
SDCP27400	3.94	1.97	0.394	0.246	0.276	0.701	195	2,885	1,860
SDCP27614	6.3	3.15							
SDCP27778	7.87								
SDCP27912	9.45								
SDCP271100	11.02								
SDCP271212	12.6								
SDCP271400	14.17								
SDCF22434	4.72	4.29	0.315	0.205	—	0.591	180	2,000	1,400
SDCF22512	5.51	5.08							
SDCF22614	6.3	5.87							
SDCF22700	7.09	6.65							
SDCF22858	8.66	8.23							
SDCF221014	10.24	9.8							
SDCF221134	11.81	11.38							
SDCF221334	13.78	13.35							

See footnotes on p. 32.

C-F-2023TECHSUP © 2023 Simpson Strong-Tie Company Inc.

Dimensions and Mechanical Properties of Strong-Drive® and Deck-Drive™ Screws for Wood and Engineered Wood (cont.)

Model No.	Dimensions[a]						Strengths		
	Length	Thread Length	D	D_r	D_s	D_h	Bend Yield, F_{yb} (ksi)	Tension (lb.)	Shear (lb.)
ESR-3046 (cont.)									
SDCF27400	3.94	3.66	0.394	0.24	—	0.728	200	3,200	2,300
SDCF27614	6.3	6.02							
SDCF27778	7.87	7.6							
SDCF27912	9.45	9.17							
SDCF271100	11.02	10.75							
SDCF271958	19.69	19.41							
SDCF272358	23.62	23.35							
SDCFC271958	19.69	18.38	0.394	0.245	—	0.528	200	3,200	2,300
SDCFC272358	23.62	22.32							
SDCFC273112	31.5	30.19							
SDCFC273938	39.37	38.07							
SD9112	1.5	1	0.177	0.113	0.132	0.378	188	510	425
SD9212	2.5	1							
SD9112SS	1.5	1	0.169	0.121	0.139	0.378	155[c]	530	440
SD9212SS	2.5	1							
SD10112/SD10112DBB	1.5	1	0.2	0.126	0.161	0.378	188	555	445
SD10212	2.5	1							
SDWF2716	16	5	0.323	0.245	0.274	0.75	—	2,685	—
SDWF2720	20								
SDWF2724	24								
SDWF2726	26								
SDWF2730	30								

See footnotes on p. 32.

C-F-2023TECHSUP © 2023 Simpson Strong-Tie Company Inc.

Dimensions and Mechanical Properties of Strong-Drive® and Deck-Drive™ Screws for Wood and Engineered Wood (cont.)

Model No.	Dimensions[a]						Strengths		
	Length	Thread Length	D	D_r	D_s	D_h	Bend Yield, F_{yb} (ksi)	Tension (lb.)	Shear (lb.)
ESR-2236									
SDS25112	1.5	1	0.256	0.188	0.239	0.503	172	1,430	800
SDS25134	1.75	1.25							
SDS25200	2	1.25							
SDS25212	2.5	1.5							
SDS25300	3	2							
SDS25312	3.5	2.25							
SDS25412	4.5	2.75							
SDS25500	5	2.75							
SDS25600	6	3.25							
SDS25800	8	3.25							
SDS25112SS	1.5	1	0.256	0.188	0.239	0.503	164[c]	1,430	800
SDS25200SS	2	1.25							
SDS25212SS	2.5	1.5							
SDS25300SS	3	2							
SDS25312SS	3.5	2.25							
ESR-1472									
WSV134	1.75	1.2	0.182	0.121	0.132	0.333	200	710	460
WSV200	2	1.45							
WSVF200	2	1.45							
WSV212	2.5	1.95							
WSVF212	2.5	1.95							
WSV300	3	2.17							
WSVF300	3	2.17							

a: Notation

D	Major diameter
D_r	Minor (root) diameter
D_s	Diameter of shank
D_h	Diameter of head
F_{yb}	Specified bending yield strength based on minor diameter and testing per ASTM F1575
Tension and Shear	Tested per AISI S904, calculation is average divided by safety factor of 3.0
b: square thread	Major diameter is diagonal across corners
c: F_{yb}	Types 305 and 316

d: These values reflect information at the time of publication. For the most current dimensions and properties, see the published evaluation reports.

The dimensions and properties shown in this table are intended for circumstances where a high degree of precision is needed, such as engineering calculations.
In other published materials for product identification, commercial dimensions are used for clarity of communication.

C-F-2023TECHSUP © 2023 Simpson Strong-Tie Company Inc.

Wafer-Head Construction Screw

Cabinet Assembly and Installation; Multipurpose Wood-to-Wood

The Wafer-Head Construction screw is a versatile, multi-purpose fastening solution for a variety of interior or exterior applications, such as cabinet installation and wood-to-wood applications where high pull-through capacity is required. With its low torque threads and fast-start point, the Wafer-Head Construction screw drives effortlessly and is ideally suited to drive into today's wood or engineered wood materials. Available in convenient quantities, Wafer-Head Construction screws are offered in select sizes for fastening a variety of projects.

US Patent 9,523,383

For more information, see p. 83, C-F-2023 *Fastening Systems* catalog

Wafer-Head Construction Screw

Size x Length (in.)	Model No.	Thread Length (in.)	Reference Allowable Withdrawal Value, W (lb./in.)		Reference Allowable Pull-Through Value (lb.) Side Member Thickness ≥ ¾ in.	
			DFL/SP	SPF/HF	DFL/SP	SPF/HF
#8 x 1¼	CBT08114	0.80	108	62	194	147
#8 x 1½	CBT08112	1.50				
#8 x 2	CBT08200	1.25				
#8 x 2½	CBT08212	1.25				
#8 x 3	CBT08300	1.50				

1. Tabulated allowable values are shown at the wood load duration factor of $C_D = 1.0$. Loads may be increased for load duration up to $C_D = 1.6$.
2. Tabulated reference allowable withdrawal values, W, are in pounds per inch of the thread penetration into the side grain of the main member.
3. Tabulated reference allowable pull-though values are the allowable load for the fastener head pull-through for a minimum ¾" thick side member.
4. Use the lower of the withdrawal or pull-through values to determine axial design value.
5. Screws must be installed normal to the side grain of the wood main member with the screw axis at a 90° angle to the wood fibers.

C-F-2023TECHSUP © 2023 Simpson Strong-Tie Company Inc.

Finish Trim Screw

Multipurpose Screw for Trim, Cladding, Fascia and Other Wood-to-Wood Fastening

The Finish Trim screw is a versatile, multipurpose fastening solution for a variety of interior and exterior applications, such as the installation of trim, cladding and fascia. With its low-torque threads and fast-start point, the Finish Trim screw drives effortlessly and is ideally suited to be countersunk into sawn lumber or engineered wood materials. Its mini trim head provides minimal screw head visibility. Available in convenient quantities, Finish Trim screws are offered in select sizes for fastening a variety of projects.

Codes/Standards: N/A

US Patent 9,523,383

For more information, see p. 84, C-F-2023 *Fastening Systems* catalog

For use in elevated or ocean/water front, it is recommended to use Type 316 stainless steel screws that are available. The values in the table below are applicable for both Quik Guard® coating (tan or white) and stainless steel screws.

Finish Trim Screw

Size x Length (in.)	Model No.	Thread Length (in.)	Reference Allowable Withdrawal Value, W (lb./in.)		Reference Allowable Pull-Through Value, (lb.) Side Member Thickness ≥ ¾ in.	
			DFL/SP	SPF/HF	DFL/SP	SPF/HF
#7 x 1¼	FT07114	0.75	115	87	63	25
#7 x 1½	FT07112	1.00				
#7 x 2	FT07200	1.25				
#7 x 2½	FT07212	1.50				
#7 x 3	FT07300	1.50				
#9 x 4	FT09400	2.00	185	137	78	45
#9 x 5	FT09500	2.00				

1. Tabulated allowable values are shown at the wood load duration factor of C_D = 1.0. Loads may be increased for load duration up to C_D = 1.6.
2. Tabulated reference allowable withdrawal values, W, are in pounds per inch of the thread penetration into the side grain of the main member.
3. Tabulated reference allowable pull-though values are the allowable load for the fastener head pull-through for a minimum ¾" thick side member.
4. Use the lower of the withdrawal or pull-through values to determine axial design value.
5. Screws must be installed normal to the side grain of the wood main member with the screw axis at a 90° angle to the wood fibers.

C-F-2023TECHSUP © 2023 Simpson Strong-Tie Company Inc.

Deck-Drive™
DSV WOOD and CSV CONSTRUCTION Screws

Multipurpose deck and other wood-to-wood or applications

Simpson Strong-Tie #10 Deck-Drive DSV wood screws are designed for preservative-treated decking applications and can also be used for general framing and construction with wood and engineered wood products. Quik Guard® coating on the DSV screws provides corrosion resistance for exterior and certain preservative-treated wood applications. The CSV construction screws have the same features and properties as the DSV screws and are intended to be used only in dry service, low-corrosion applications. The CSV screws have an electroplated yellow-zinc coating that provides corrosion resistance for interior applications. The DSV and CSV screws have a 6-lobe drive with flat head and do not require predrilling for softer woods. The screws have been tested and evaluated in accordance with ICC-ES Acceptance Criteria AC233 (*Acceptance Criteria for Dowel-type Threaded Fasteners Used in Wood*), and are load rated for shear, pull-through and withdrawal resistance. The tables below provide load information for the DSV and CSV screws.

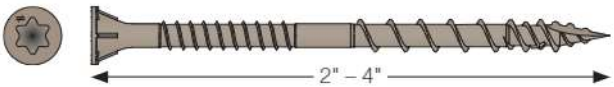

Deck-Drive DSV Wood Screws

Strong-Drive® CSV Construction Screws

Allowable Shear Loads

Size x Length (in.)	Model No.	Thread Length (in.)	DFL/SP Reference Allowable Shear Load (lb.)				SPF/HF Reference Allowable Shear Load (lb.)			
			Side Member Thickness (in.)				Side Member Thickness (in.)			
			1.5	2.0	2.5	3.0	1.5	2.0	2.5	3.0
#10 x 2½	DSV212 / CSV212	1.50	106	—	—	—	83	—	—	—
#10 x 3	DSV3 / CSV3	1.50	173	99	—	—	131	80	—	—
#10 x 3½	DSV312	2.00	173	173	99	—	131	131	80	—
#10 x 4	DSV4	2.50	173	173	173	99	131	131	131	80

1. Allowable loads are based on full penetration into the main member. Full penetration is the screw length minus the side member thickness.
2. Allowable loads are shown at the wood load duration factor of $C_D = 1.0$. Loads may be increased for load duration per the building code up to a $C_D = 1.6$. Tabulated values must be multiplied by all applicable adjustment factors per the NDS. For DSV in-service moisture content greater than 19%, use $C_M = 0.62$.
3. Loads are based on installation into the side grain of the wood with the screw axis perpendicular to the face of the member.
4. Loads are based on tests of connections made with same species as main and side members. For connections with mixed species, use the loads for the species with the lower specific gravity.
5. Engineered wood must have a minimum modulus of elasticity grade of 0.80E, and have a minimum equivalent specific gravity at least 0.50 to use the DFL/SP values, or 0.42 to use the SPF/HF values.

C-F-2023TECHSUP © 2023 Simpson Strong-Tie Company Inc.

Deck-Drive™
DSV WOOD and CSV CONSTRUCTION Screws (cont.)

Allowable Withdrawal and Pull-Through Loads

Size x Length (in.)	Model No.	Thread Length (in.)	Reference Allowable Withdrawal, W (lb./in.)		Reference Allowable Withdrawal, W_{max} (lb./in.)		Reference Pull-Through (lb.)	
			DFL/SP	SPF/HF	DFL/SP	SPF/HF	DFL/SP	SPF/HF
#10 x 2	DSV2	1.25	121	94	150	115	174	154
#10 x 2½	DSV212 / CSV212	1.50			180	140		
#10 x 3	DSV3 / CV3	1.50			180	140		
#10 x 3½	DSV312	2.00			240	190		
#10 x 4	DSV4	2.50			300	235		

1. The tabulated Reference Allowable Withdrawal design value, W, is in pounds per inch of the thread penetration into the side grain of the main member.
2. The tabulated Reference Maximum Withdrawal design value, W_{max}, is in pounds where the entire thread length is embedded into the side grain of the main member.
3. Reference withdrawal design values, W and W_{max}, are shown at C_D = 1.0. Loads may be increased for load duration per the building code up to C_D = 1.6. Tabulated values must be multiplied by all applicable adjustment factors from the NDS. For DSV in-service moisture content greater than 19%, use C_M = 0.70.
4. Embedded thread length is that portion of the end threads in the main member, including the screw tip.
5. Reference Pull-Through values are based on pull-through of a 1½"-thick side member.
6. Engineered wood must have a minimum modulus of elasticity grade of 1.55E and a minimum equivalent specific of at least 0.50 to use the DFL/SP values, or 0.42 to use the SPF/HF values.

Connection Geometry

Condition			Minimum Distance or Spacing (in.)	Reduction Factor
Edge Distance	Perpendicular to grain loading		¾	0.91
	Parallel to grain loading		½	1.00
End Distance	Perpendicular to grain loading		4	0.91
	Parallel to grain loading		4	1.00
Spacing Between Fasteners in a Row	Perpendicular to grain loading		2	0.75
	Parallel to grain loading		2	1.00
Spacing Between Row	Perpendicular to grain loading	Non-staggered row	1	0.75
		Staggered rows	1	1.00
	Parallel to grain loading	Non-staggered row	1	0.88
		Staggered rows	1	1.00

1. Edge distances, end distances, and spacing of the screws must be sufficient to prevent splitting of the wood, or as required by this table, or when applicable as recommended by the structural composite lumber manufacturer, whichever is the most restrictive.
2. Allowable shear loads shall be multiplied by the applicable tabulated reduction factors when used in the corresponding geometry.

C-F-2023TECHSUP © 2023 Simpson Strong-Tie Company Inc.

Strong-Drive®
SDWS **TIMBER** Screw (Exterior Grade)

Structural Wood-to-Wood Connections Including Ledgers, Indoor/Outdoor Projects

Designed to provide an easy-to-install, high-strength alternative to through-bolting and traditional lag screws. The Strong-Drive SDWS Timber screws are ideal for the contractor and do-it-yourselfer alike.

Double-barrier coating provides corrosion resistance equivalent to hot-dip galvanization, making it suitable for certain exterior and preservative-treated wood applications, as described in the evaluation report.

Codes/Standards: IAPMO UES ER-192, State of Florida FL13975

US Patent 9,523,383

For more information, see p. 59, C-F-2023 *Fastening Systems* catalog

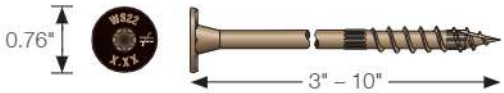

SDWS Timber Screw — Allowable Shear Loads — Douglas Fir–Larch and Southern Pine Lumber

Length (in.)	Model No.	Thread Length (in.)	Reference DFL/SP Allowable Shear Loads (lb.)								
			Wood Side Member Thickness (in.)								
			1.5	2	2.5	3	3.5	4	4.5	6	8
3	SDWS22300DB	1½	255	—	—	—	—	—	—	—	—
4	SDWS22400DB	2⅜	405	405	305	—	—	—	—	—	—
5	SDWS22500DB	3	405	405	360	360	325	—	—	—	—
6	SDWS22600DB	3	405	405	405	405	365	365	355	—	—
8	SDWS22800DB	3	405	405	405	405	395	395	395	395	—
10	SDWS221000DB	3	405	405	405	405	395	395	395	395	395

See footnotes below.

SDWS Timber Screw — Allowable Shear Loads — Spruce-Pine-Fir and Hem-Fir Lumber

Length (in.)	Model No.	Thread Length (in.)	Reference SPF/HF Allowable Shear Loads (lb.)								
			Wood Side Member Thickness (in.)								
			1.5	2	2.5	3	3.5	4	4.5	6	8
3	SDWS22300DB	1½	190	—	—	—	—	—	—	—	—
4	SDWS22400DB	2⅜	385	285	215	—	—	—	—	—	—
5	SDWS22500DB	3	405	290	290	290	195	—	—	—	—
6	SDWS22600DB	3	405	365	365	365	310	310	210	—	—
8	SDWS22800DB	3	405	365	365	365	310	310	280	280	—
10	SDWS221000DB	3	405	365	365	365	310	310	280	280	280

1. All applications are based on full penetration into the main member. Full penetration is the screw length minus the side member thickness.
2. Allowable loads are shown at the wood load duration factor of $C_D = 1.0$. Loads may be increased for load duration per the building code up to a $C_D = 1.6$. Tabulated values must be multiplied by all applicable adjustment factors per the NDS.
3. For minimum fastener spacing requirements for both side and main members, see the Spacing Requirements Figure and Table on the next page.
4. For in-service moisture content greater than 19%, use $C_M = 0.7$.
5. Loads are based on installation into the side grain of the wood with the screw axis perpendicular to the face of the member.

C-F-2023TECHSUP © 2023 Simpson Strong-Tie Company Inc.

Strong-Drive®
SDWS **TIMBER** Screw (Exterior Grade) (cont.)

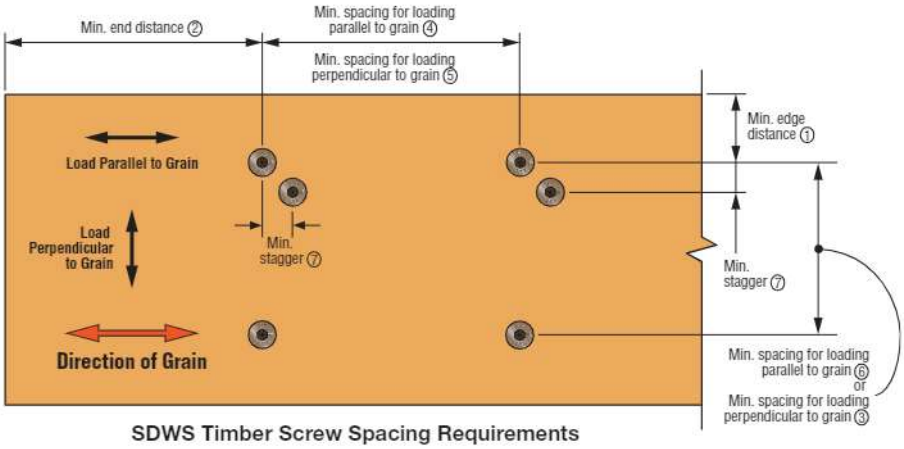

SDWS Timber Screw Spacing Requirements

SDWS Timber Screw Spacing Requirements

Condition	Direction of Load to Grain	ID	Minimum Distance or Spacing (in.)
Edge Distance	Perpendicular	①	1 7/16
	Parallel	①	1 7/16
End Distance	Perpendicular	②	6
	Parallel	②	6
Spacing Between Fasteners in a Row	Perpendicular	③	4
	Parallel	④	8
Spacing Between Rows of Fasteners	Perpendicular	⑤	4
	Parallel	⑥	4
Spacing Between Staggered Rows	Perpendicular or Parallel	⑦	5/8

1. For axial loading only, use the following minimum dimensions: end distance = 3¼", edge distance = 1⅜", spacing parallel to grain = 2¼", spacing perpendicular to grain = 1⅜".

SDWS Timber Screw — Reference Allowable Withdrawal Loads — Douglas Fir–Larch, Southern Pine, Spruce-Pine-Fir and Hem-Fir Lumber

Model No.	Length (in.)	Thread Length (in.)	Reference Allowable Withdrawal Loads, W (lb./in.)		Max. Reference Allowable Withdrawal Loads, W_{max} (lb.)	
			DFL and SP Main Member	HF and SPF Main Member	DFL and SP Main Member	HF and SPF Main Member
SDWS22300DB	3	1½	164	151	245	225
SDWS22400DB	4	2⅜	179	160	425	380
SDWS22500DB	5	3	214	187	590	495
SDWS22600DB	6	3	214	187	590	495
SDWS22800DB	8	3	214	187	590	495
SDWS221000DB	10	3	214	187	590	495

1. The tabulated reference withdrawal design value, W, is in pounds per inch of the thread penetration into the side grain of the main member.
2. The tabulated reference withdrawal design value, W_{max}, is in pounds where the entire thread length must penetrate into the side grain of the main member.
3. The tabulated reference withdrawal design values, W and W_{max}, are shown at a C_D = 1.6. For end-grain withdrawal, C_{eg} = 0.65. Tabulated values must be multiplied by all applicable adjustment factors from the NDS as referenced in the IBC or IRC.
4. Embedded thread length is that portion held in the main member including the screw tip.
5. Values are based on the lesser of withdrawal from the main member or pull-through of a 1½" side member.
6. For in-service moisture content greater than 19%, use C_M = 0.7.

C-F-2023TECHSUP © 2023 Simpson Strong-Tie Company Inc.

Strong-Drive®
SDWS **TIMBER** Screw (Exterior Grade) with Gypsum Board Interlayer(s)

The Strong-Drive SDWS Timber screw may be installed with one or two layers of ⅝" gypsum board. This layer of gypsum is to be located between the side member and main member for a standard connection. See the tables below for the required screw lengths and allowable loads for these applications. Loads are derived from assembly testing based on ICC-ES AC233.

SDWS Timber Screw — Douglas Fir–Larch and Southern Pine Lumber Allowable Single Shear Loads with One Layer of ⅝" Gypsum Board

Length (in.)	Model No.	Thread Length (in.)	Reference DFL/SP Allowable Shear Loads (lb.)								
			Wood Side Member Thickness (in.)								
			1.5	2.0	2.5	3.0	3.5	4.0	4.5	6.0	8.0
4	SDWS22400DB	2.375	265	—	—	—	—	—	—	—	—
5	SDWS22500DB	3	265	265	235	—	—	—	—	—	—
6	SDWS22600DB	3	265	265	265	265	235	—	—	—	—
8	SDWS22800DB	3	265	265	265	265	255	255	255	—	—
10	SDWS221000DB	3	265	265	265	265	255	255	255	255	—

See footnotes on next page.

SDWS Timber Screw — Douglas Fir–Larch and Southern Pine Lumber Allowable Single Shear Loads with Two Layers of ⅝" Gypsum Board

Length (in.)	Model No.	Thread Length (in.)	Reference DFL/SP Allowable Shear Loads (lb.)								
			Wood Side Member Thickness (in.)								
			1.5	2.0	2.5	3.0	3.5	4.0	4.5	6.0	8.0
4	SDWS22400DB	2.375	—	—	—	—	—	—	—	—	—
5	SDWS22500DB	3	265	265	—	—	—	—	—	—	—
6	SDWS22600DB	3	265	265	265	265	—	—	—	—	—
8	SDWS22800DB	3	265	265	265	265	255	255	255	—	—
10	SDWS221000DB	3	265	265	265	265	255	255	255	255	—

See footnotes on next page.

C-F-2023TECHSUP © 2023 Simpson Strong-Tie Company Inc.

Strong-Drive®
SDWS **TIMBER** Screw (Exterior Grade) with Gypsum Board Interlayer(s) (cont.)

SDWS Timber Screw — Spruce-Pine-Fir and Hem-Fir Lumber Allowable Single Shear Loads with One Layer of ⅝" Gypsum Board

Length (in.)	Model No.	Thread Length (in.)	Reference SPF/HF Allowable Shear Loads (lb.)								
			Wood Side Member Thickness (in.)								
			1.5	2.0	2.5	3.0	3.5	4.0	4.5	6.0	8.0
4	SDWS22400DB	2.375	250	—	—	—	—	—	—	—	—
5	SDWS22500DB	3	260	190	190	—	—	—	—	—	—
6	SDWS22600DB	3	260	235	235	235	200	—	—	—	—
8	SDWS22800DB	3	260	235	235	235	200	200	180	—	—
10	SDWS221000DB	3	260	235	235	235	200	200	180	180	—

See footnotes below.

SDWS Timber Screw — Spruce-Pine-Fir and Hem-Fir Lumber Allowable Single Shear Loads with Two Layers of ⅝" Gypsum Board

Length (in.)	Model No.	Thread Length (in.)	Reference SPF/HF Allowable Shear Loads (lb.)								
			Wood Side Member Thickness (in.)								
			1.5	2.0	2.5	3.0	3.5	4.0	4.5	6.0	8.0
4	SDWS22400DB	2.375	—	—	—	—	—	—	—	—	—
5	SDWS22500DB	3	260	190	—	—	—	—	—	—	—
6	SDWS22600DB	3	260	235	235	235	—	—	—	—	—
8	SDWS22800DB	3	260	235	235	235	200	200	180	—	—
10	SDWS221000DB	3	260	235	235	235	200	200	180	180	—

1. All applications are based on full penetration which equals fastener length minus side member thickness and gypsum board thickness.
2. Allowable loads are shown at the wood load duration factor of C_D =1.0. Loads may be increased for load duration per the building code up to a C_D =1.6. Tabulated values must be multiplied by all applicable adjustment factors per the NDS.
3. For minimum fastener spacing requirements for both side and main members, see the Spacing Requirements Figure and Table on p. 38.
4. For in-service moisture content greater than 19%, use C_M = 0.7.
5. Gypsum board must be attached as required per the building code.

C-F-2023TECHSUP © 2023 Simpson Strong-Tie Company Inc.

Strong-Drive® SDWS FRAMING Screw

Multipurpose Wood-to-Wood Including Framing, Indoor/Outdoor Projects

The framing connections with the SDWS FRAMING screws are designed for common framing connections, per the 2021 and 2018 IRC and IBC code requirements, and are based on engineering analysis.

Codes/Standards: IAPMO UES ER-192, State of Florida FL13975

US Patent 9,523,383

For more information, see p. 58, C-F-2023 *Fastening Systems* catalog

SDWS Framing Screw — Allowable Shear Loads for Sawn Lumber

Length (in.)	Model No.	Side Member Thickness (in.)	Main Member Penetration (in.)	Reference Allowable Shear Loads (lb.)		
				SP	DFL	SPF/HF
2½	SDWS16212	1½	0.90	131	106	99
3	SDWS16300	1½	1.40	229	150	150
		2	0.90	129	129	89
3½	SDWS16312	1½	2.0	254	254	199
4	SDWS16400	1½	2.5	254	254	199
		2	2.0	262	262	199

1. All applications are based on full penetration into the main member. Full penetration is the screw length minus the side member thickness.
2. Allowable loads are shown at the wood load duration factor of C_D = 1.0. Loads may be increased for load duration per the building code up to a C_D = 1.6. Tabulated values must be multiplied by all applicable adjustment factors per the NDS.
3. For minimum fastener spacing requirements for both side and main members, see the Spacing Requirements Figure and Table on the next page.
4. For in-service moisture content greater than 19%, use C_M = 0.70.
5. Screws must be installed straight into the side grain of the wood main member with the screw axis at a 90° angle to the wood fibers.

SDWS Framing Screw — Allowable Withdrawal Load in Sawn Lumber

Model No.	Length (in.)	Thread Length (in.)	Reference Withdrawal Loads, W (lb./in.)			Max. Reference Withdrawal Loads, W_{max} (lb.)		
			SP	DFL	SPF/HF	SP	DFL	SPF/HF
SDWS16212	2.40	1.125	177	132	103	199	149	116
SDWS16300	2.90	1.625	192	127	122	310	205	200
SDWS16312	3.50	2.000	181	169	127	345	300	200
SDWS16400	4.00	2.500	181	169	127	345	300	200

1. The tabulated reference withdrawal values (W) are in pounds per inch of the thread penetration into the main member.
2. The tabulated reference withdrawal values (W_{max}) are in pounds where the entire thread length must penetrate into the main member.
3. Tabulated reference withdrawal values (W) and (W_{max}) are shown at a C_D = 1.0. Loads may be increased for load duration per the building code up to a C_D = 1.6. Tabulated values must be multiplied by all applicable adjustment factors from the NDS as referenced in the IBC or IRC.
4. Values are based on the lesser of withdrawal from the main member or pull-through of a 1½" side member. For in-service moisture content greater than 19%, use C_M = 0.65.

SDWS Framing Screw — Allowable Shear Loads for Wood Structural Panel Side Member

Model No.	Side Member Thickness (in.)	Min. Main Member Penetration (in.)	Reference Allowable Shear Loads (lb.)		
			SP	DFL	SPF/HF
SDWS16	15/32	1.93	143	143	143
	23/32	1.68	200	187	138

1. Allowable loads are shown at the wood load duration factor of C_D = 1.0. Loads may be increased for load duration per the building code up to a C_D = 1.6. Tabulated loads must be multiplied by all applicable adjustment factors per the NDS.
2. WSP side members for tests were oriented strand board (equivalent specfic gravity = 0.50).
3. All applications are based on full penetration into the main member. Full penetration is the screw length minus the side member thickness.
4. Screws must be installed straight into the side grain of the wood main member with the screw axis at a 90° angle to the wood fibers.

SDWS Framing Screw — Allowable Pull-Through Loads for Wood Structural Panel Side Member

Model No.	Side Member Thickness (in.)	Reference Allowable Pull-Through Loads (lb.)
SDWS16	15/32	84
	23/32	169

1. Allowable loads are shown at the wood load duration factor pf C_D = 1.0. Loads may be increased for load duration per the building code up to a C_D = 1.6. Tabulated loads must be multiplied by all applicable adjustment factors per the NDS.
2. WSP side members for tests were oriented strand board (equivalent specfic gravity = 0.50).
3. For connections with 15/32" and 23/32" thick OSB side members, the lesser of withdrawal loads from the main and pull-through loads from WSP side member shall be used in design.

C-F-2023TECHSUP © 2023 Simpson Strong-Tie Company Inc.

Strong-Drive®
SDWS FRAMING Screw (cont.)

Typical Conventional Framing Connections

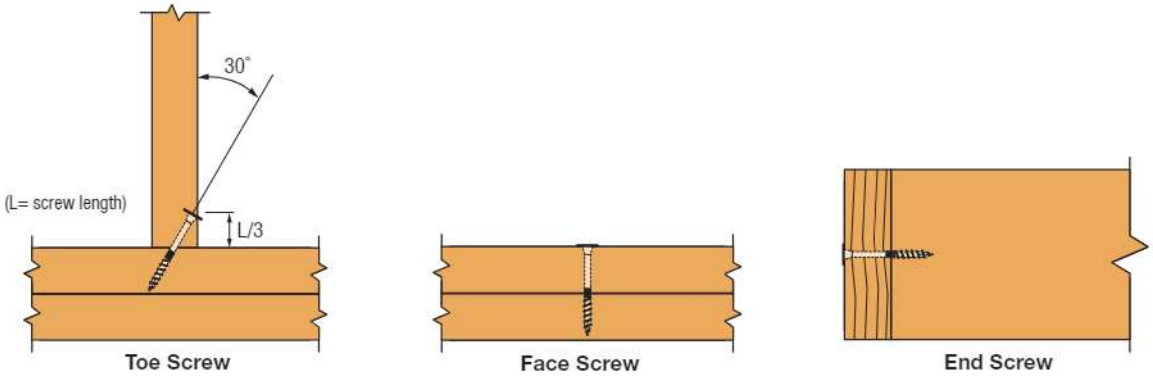

Strong-Drive SDWS Framing Screw Spacing Requirements for Non-Prescriptive Construction

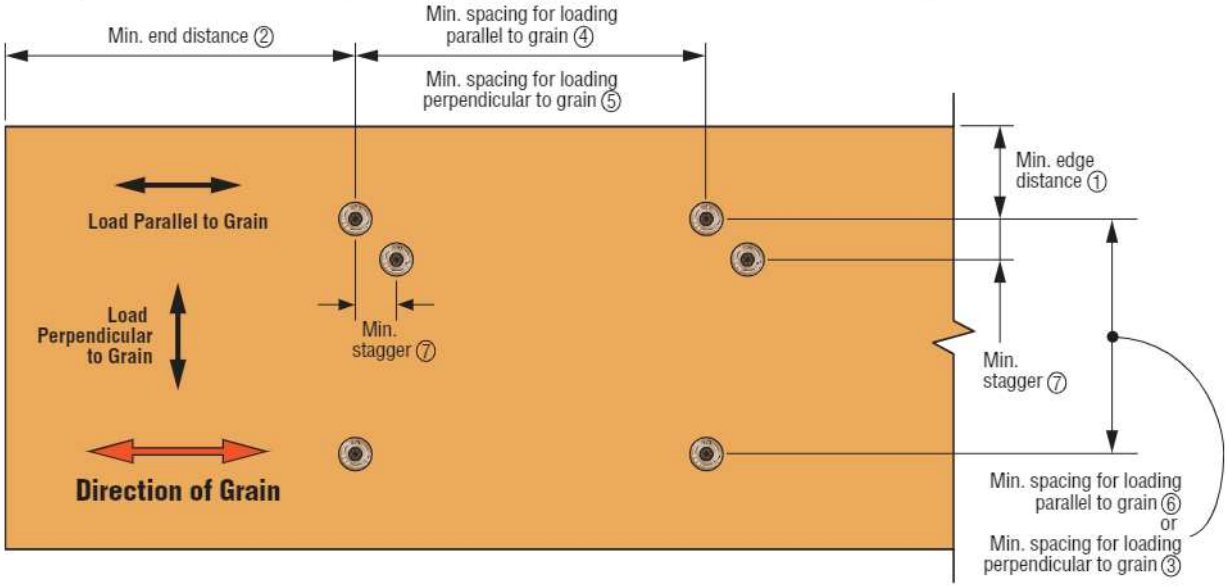

SDWS Framing Screw Spacing Requirements

Condition	Direction of Load to Grain	ID	Minimum Distance or Spacing (in.)	
			SDWS16212	SDWS16300 SDWS16312 SDWS16400
Edge Distance	Perpendicular	①	1	1
	Parallel	①	½	1
End Distance	Perpendicular	②	3½	4
	Parallel	②	2	3
Spacing Between Fasteners in a Row	Perpendicular	③	2	2
	Parallel	④	2	2
Spacing Between Rows of Fasteners	Perpendicular	⑤	1[1]	1[2]
	Parallel	⑥	1[1]	1[2]
Spacing Between Staggered Rows	Perpendicular or Parallel	⑦	7/16	7/16

1. Table loads must be multiplied by adjustment factor of 0.93.
2. Table loads must be multiplied by adjustment factor of 0.91.
3. For axial loading only, use the following minimum dimensions: end distance = 2¼", edge distance = ⅞", spacing parallel to grain = 1⅝", spacing perpendicular to grain = ⅞".

C-F-2023TECHSUP © 2023 Simpson Strong-Tie Company Inc.

Strong-Drive®
SDWS FRAMING Screw (cont.)

Walls

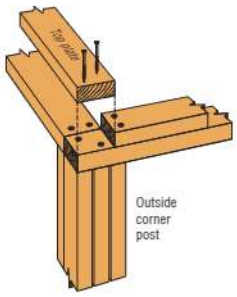

Double Top Plate at Corners

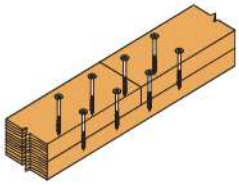

Double Top Plate Laps (Face Screw)

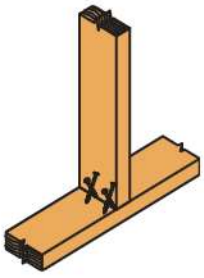

Stud to Sole Plate (Toe Screw)

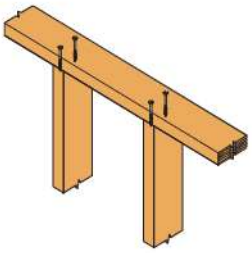

Top or Sole Plate to Stud (End Screw)

Connection Application	Fastening Schedule				
	2021 IRC		2021 IBC		Location
	Table R602.3 (1) Item	Equivalent SDWS Framing Screws	Table 2304.10.2 Item	Equivalent SDWS Framing Screws	
Top or bottom plate to stud	17	(2) SDWS16300	16	(2) SDWS16300	End screw
Stud-to-sole plate	17	(4) SDWS16212	16	(4) SDWS16212	Toe screw
Double top-plate splice	14	(8) SDWS16300	13	(8) SDWS16300	Face screw
Top plates, laps at corners and intersections	18	(2) SDWS16300	17	(2) SDWS16300	Face screw
Stud to stud (not at braced wall panels)	8	SDWS16300 24" o.c.	8	SDWS16300 24" o.c.	Face screw

Ceiling

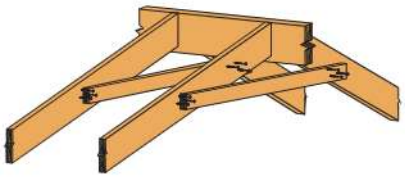

Collar Tie to Rafter (Face Screw)

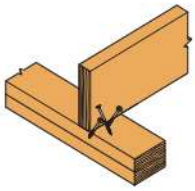

Ceiling Joist to Plate (Toe Screw)

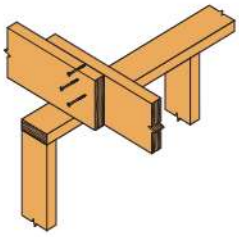

Ceiling Joist, Laps Over Partitions (Face Screw)

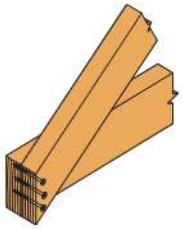

Ceiling Joist to Parallel Rafter (Face Screw)

Connection Application	Fastening Schedule				
	2021 IRC		2021 IBC		Location
	Table R602.3 (1) Item	Equivalent SDWS Framing Screws	Table 2304.10.2 Item	Equivalent SDWS Framing Screws	
Ceiling joist-to-top plate	2	(3) SDWS16212	2	(3) SDWS16212	Toe screw
Ceiling joist not attached to parallel rafter, laps over partitions	3	(3 min.*) SDWS16300	3	(3) SDWS16300	Face screw
Collar tie to rafter	5	(3) SDWS16300	5	(3) SDWS16300	Face screw
Ceiling joist attached to parallel rafter (heel joint)	4	(3 min.*) SDWS16300	4	(3 min.*) SDWS16300	Face screw

*Quantities vary based on project conditions. Refer to the IRC or IBC for additional information. The SDWS16212 is a 1-for-1 replacement for 8d common nails and SDWS16300 is a 1-for-1 replacement for 10d and 16d common nails.

C-F-2023TECHSUP © 2023 Simpson Strong-Tie Company Inc.

Strong-Drive®
SDWS FRAMING Screw (cont.)

Roof

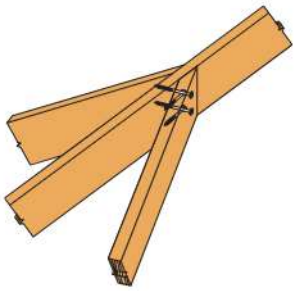

Jack Rafter to Hip
(Toe Screw)

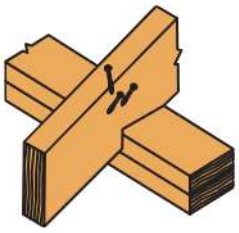

Roof Rafter to Plate
(Toe Screw)

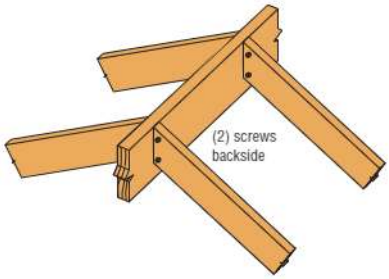

Roof Rafter to 2x Ridge Board
(Toe Screw)

Connection Application	Fastening Schedule				
	2021 IRC		2021 IBC		Location
	Table R602.3 (1) Item	Equivalent SDWS Framing Screws	Table 2304.10.2 Item	Equivalent SDWS Framing Screws	
Rafter or roof truss to plate	6	(3) SDWS16300	6	(3) SDWS16300	Toe screw
Roof rafter to 2x ridge beam	7	(3) SDWS16300	7	(3) SDWS16300	Toe screw
Jack rafter to hip	7	(3) SDWS16300	7	(3) SDWS16300	Toe screw

Floor

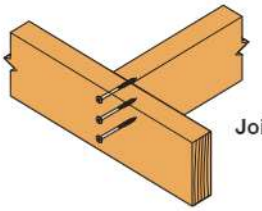

Joist to Rim Board
(End Screw)

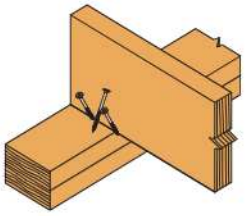

Joist to Sill or Girder
(Toe Screw)

Connection Application	Fastening Schedule				
	2021 IRC		2021 IBC		Location
	Table R602.3 (1) Item	Equivalent SDWS Framing Screws	Table 2304.10.2 Item	Equivalent SDWS Framing Screws	
Band or rim joist to joist	27	(3) SDWS16300	28	(3) SDWS16300	End screw
Joist to sill, top plate or girder	22	(3) SDWS16212	21	(3) SDWS16212	Toe screw

Beam

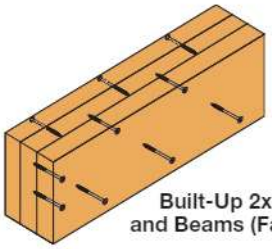

Built-Up 2x Girders
and Beams (Face Screw)

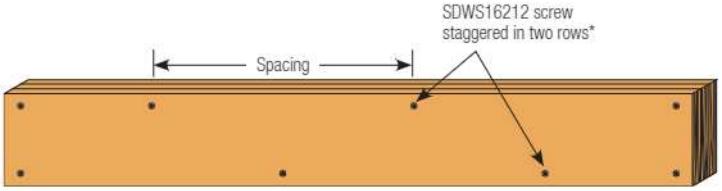

Beam Assembly Detail*

Connection Application	Fastening Schedule				
	2021 IRC		2021 IBC		Location
	Table R602.3 (1) Item	Equivalent SDWS Framing Screws	Table 2304.10.2 Item	Equivalent SDWS Framing Screws	
Built-up 2x girders and beams	28	SDWS16212 24" o.c. staggered and (3) SDWS16212 at ends and splice	26	SDWS16212 24" o.c. staggered and (3) SDWS16212 at ends and splice	Face screw

*Fastening pattern shown applies to each ply of the built-up 2x beam.

C-F-2023TECHSUP © 2023 Simpson Strong-Tie Company Inc.

Deck-Drive™
DSV **WOOD** Screw

Multipurpose deck and other wood-to-wood or applications

Simpson Strong-Tie #10 Deck-Drive DSV wood screws are designed for preservative-treated decking applications and can also be used for general framing and construction with wood and engineered wood products. Quik Guard® coating on the DSV screws provides corrosion resistance for exterior and certain preservative-treated wood applications. The DSV screws have a 6-lobe drive with flat head and do not require predrilling for softer woods. The screws have been tested and evaluated in accordance with ICC-ES Acceptance Criteria AC233 (*Acceptance Criteria for Dowel-type Threaded Fasteners Used in Wood*), and are load rated for shear, pull-through and withdrawal resistance. The tables below provide load information for the DSV screws.

For more information, see p. 76, *C-F-2023 Fastening Systems* catalog.

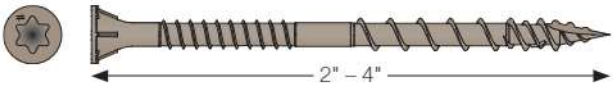

DSV Wood Screw — Allowable Shear Loads

Size x Length (in.)	Model No.	Thread Length (in.)	DFL/SP Reference Allowable Shear Load (lb.) Side Member Thickness (in.)				SPF/HF Reference Allowable Shear Load (lb.) Side Member Thickness (in.)			
			1.5	2.0	2.5	3.0	1.5	2.0	2.5	3.0
#10 x 2½	DSV212	1.50	106	—	—	—	83	—	—	—
#10 x 3	DSV3	1.50	173	99	—	—	131	80	—	—
#10 x 3½	DSV312	2.00	173	173	99	—	131	131	80	—
#10 x 4	DSV4	2.50	173	173	173	99	131	131	131	80

1. Allowable loads are based on full penetration into the main member. Full penetration is the screw length minus the side member thickness.
2. Allowable loads are shown at the wood load duration factor of C_D = 1.0. Loads may be increased for load duration per the building code up to a C_D = 1.6. Tabulated values must be multiplied by all applicable adjustment factors per the NDS. For DSV in-service moisture content greater than 19%, use C_M = 0.62.
3. Loads are based on installation into the side grain of the wood with the screw axis perpendicular to the face of the member.
4. Loads are based on tests of connections made with same species as main and side members. For connections with mixed species, use the loads for the species with the lower specific gravity.
5. Engineered wood must have a minimum modulus of elasticity grade of 0.80E, and have a minimum equivalent specific gravity at least 0.50 to use the DFL/SP values or 0.42 to use the SPF/HF values.

C-F-2023TECHSUP © 2023 Simpson Strong-Tie Company Inc.

Deck-Drive™
DSV **WOOD** Screw (cont.)

DSV Wood Screw — Allowable Withdrawal and Pull-Through Loads

Size x Length (in.)	Model No.	Thread Length (in.)	Reference Allowable Withdrawal, W (lb./in.)		Reference Allowable Withdrawal, W_{max} (lb./in.)		Reference Pull-Through (lb.)	
			DFL/SP	SPF/HF	DFL/SP	SPF/HF	DFL/SP	SPF/HF
#10 x 2	DSV2	1.25	121	94	150	115	174	154
#10 x 2½	DSV212	1.50			180	140		
#10 x 3	DSV3	1.50			180	140		
#10 x 3½	DSV312	2.00			240	190		
#10 x 4	DSV4	2.50			300	235		

1. The tabulated Reference Allowable Withdrawal design value, W, is in pounds per inch of the thread penetration into the side grain of the main member.
2. The tabulated Reference Maximum Withdrawal design value, W_{max}, is in pounds where the entire thread length is embedded into the side grain of the main member.
3. Reference withdrawal design values, W and W_{max}, are shown at C_D = 1.0. Loads may be increased for load duration per the building code up to C_D = 1.6. Tabulated values must be multiplied by all applicable adjustment factors from the NDS. For DSV in-service moisture content greater than 19%, use C_M = 0.70.
4. Embedded thread length is that portion of the end threads in the main member, including the screw tip.
5. Reference Pull-Through values are based on pull-through of a 1½"-thick side member.
6. Engineered wood must have a minimum modulus of elasticity grade of 1.55E, and have a minimum equivalent specific at least 0.50 to use the DFL/SP values or 0.42 to use the SPF/HF values.

DSV Wood Screw — Connection Geometry

Condition			Minimum Distance or Spacing (in.)	Reduction Factor
Edge Distance	Perpendicular to grain loading		¾	0.91
	Parallel to grain loading		½	1.00
End Distance	Perpendicular to grain loading		4	0.91
	Parallel to grain loading		4	1.00
Spacing Between Fasteners in a Row	Perpendicular to grain loading		2	0.75
	Parallel to grain loading		2	1.00
Spacing Between Row	Perpendicular to grain loading	Non-staggered row	1	0.75
		Staggered rows	1	1.00
	Parallel to grain loading	Non-staggered row	1	0.88
		Staggered rows	1	1.00

1. Edge distances, end distances, and spacing of the screws must be sufficient to prevent splitting of the wood, or as required by this table, or when applicable as recommended by the structural composite lumber manufacturer, whichever is the most restrictive.
2. Allowable shear loads shall be multiplied by the applicable tabulated reduction factors when used in the corresponding geometry.
3. For axial loading only, use the following minimum dimensions: end distance = 2", edge distance = ⅞", spacing parallel to grain = 1⅜", spacing perpendicular to grain = ⅞".

C-F-2023TECHSUP © 2023 Simpson Strong-Tie Company Inc.

Strong-Drive®
SDWV SOLE-TO-RIM Screw

Structural Wood-to-Wood Connections Including Sole-to-Rim Attachments

The Simpson Strong-Tie SDWV Sole-to-Rim structural wood screws may be used to attach wood members in lateral and withdrawal connections according to the following tables. The SDWV Sole-to-Rim screw coating is intended for dry service, low-corrosion applications and is suitable for use with FRT in dry-service conditions.

Features:

- Large 0.400"-diameter head for increased holding power
- Fast start point with helical ridge for fast, easy, low-torque installation
- Variable thread design, optimized for 2x nominal dimension lumber

Code/Standards: IAPMO UES ER-192 (including City of LA Supplement), State of Florida FL13975

For more information, see p. 107, C-F-2023 *Fastening Systems* catalog

SDWV Wood Screw — Allowable Shear Loads

Model No.	Length (in.)	Thread Length (in.)	Allowable Shear Loads (lbf)	
			DFL/SP	SPF/HF
SDWV13400	4	1.5	205	195

1. All applications are based on full penetration into the main member. Full penetration is the screw length minus the side member thickness.
2. Allowable loads are shown at the wood load duration factor of C_D = 1.0. Loads may be increased for load duration per the building code up to a C_D = 1.6. Tabulated values must be multiplied by all applicable adjustment factors per the NDS.
3. For minimum fastener spacing requirements, see the Spacing Requirements Figure and Table on next page.
4. For in-service moisture content greater than 19%, use C_M = 0.7.

SDWV Wood Screw — Allowable Withdrawal Design Values

Model No.	Length (in.)	Thread Length (in.)	Reference Withdrawal Design Value, W (lb./in.)		Maximum Reference Withdrawal Design Value, W_{max} (lbf)	
			DFL/SP	SPF/HF	DFL/SP	SPF/HF
SDWV13400	4	1.5	120	107	180	160

1. Loads are based on installation into the side grain of the wood with the screw axis perpendicular to the face of the member.
2. Allowable loads are shown at the wood load duration factor of C_D = 1.0. Loads may be increased for load duration per the building code up to a C_D = 1.6. Tabulated values must be multiplied by all applicable adjustment factors per the NDS.
3. For in-service moisture content greater than 19%, use C_M = 0.6.
4. The tabulated reference withdrawal design value, W, is in pounds per inch of the thread penetration into the side grain of the main member.
5. The tabulated reference withdrawal design value, W_{max}, is in pounds where the entire thread length must penetrate into the side grain of the main member.
6. Embedded thread length is that portion held in the main member including the screw point.
7. Values are based on the lesser of withdrawal from the main member or pull-through of a 1½" side member.

C-F-2023TECHSUP © 2023 Simpson Strong-Tie Company Inc.

Strong-Drive®
SDWV SOLE-TO-RIM Screw (cont.)

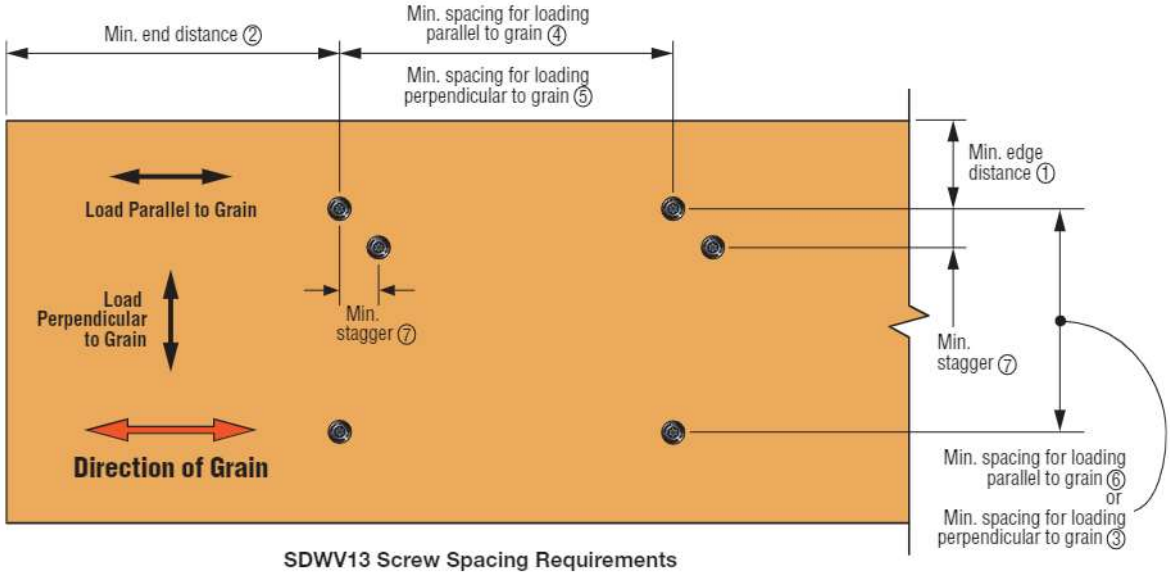

SDWV13 Screw Spacing Requirements

SDWV Sole-to-Rim Screw Spacing Requirements

Condition	Direction of Load to Grain	ID	Minimum Distance or Spacing (in.)
Edge Distance	Perpendicular	①	½
	Parallel	①	½
End Distance	Perpendicular	②	4
	Parallel	②	4
Spacing Between Fasteners in a Row	Perpendicular	③	2
	Parallel	④	2
Spacing Between Rows of Fasteners	Perpendicular	⑤	1
	Parallel	⑥	1
Spacing Between Staggered Rows	Perpendicular or Parallel	⑦	½[1]

1. Table loads must be multiplied by adjustment factor of 0.91.
2. For axial loading only, use the following minimum dimensions: end distance = 2", edge distance = ⅞", spacing parallel to grain = 1⅜", spacing perpendicular to grain = ⅞".

C-F-2023TECHSUP © 2023 Simpson Strong-Tie Company Inc.

Strong-Drive®
DWP **WOOD SS** Screw

High- to Severe-Exposure Wood Decking Applications, Indoor/Outdoor Projects

The #12 and #14 Strong-Drive DWP Wood SS flat-head screws are structural fasteners that have been tested in accordance with ICC-ES Acceptance Criteria AC233 and are load rated for shear, pull-through and withdrawal resistance. They are a great solution for exterior structural connections, such as on docks, boardwalks and decks near water or where they will be exposed to high or severe corrosion.

For more information, see p. 71, C-F-2023 *Fastening Systems* catalog

DWP WOOD SS Screw — Allowable Shear Loads

Size x Length (in.)	Model No.	Thread Length (in.)	Reference DFL/SP Allowable Shear Loads (lb.)							Reference SPF/HF Allowable Shear Loads (lb.)						
			Side Member Thickness (in.)							Side Member Thickness (in.)						
			1.5	2	2.5	3	3.5	4	4.5	1.5	2	2.5	3	3.5	4	4.5
#12 x 2½	T12250WP, S12250WP	2.0	140	—	—	—	—	—	—	105	—	—	—	—	—	—
#12 x 3	T12300WP, S12300WP	2.2	185	—	—	—	—	—	—	135	—	—	—	—	—	—
#12 x 3½	T12350WP, S12350WP	2.5	205	190	—	—	—	—	—	160	160	—	—	—	—	—
#12 x 4	T12400WP, S12400WP	2.8	205	205	205	—	—	—	—	160	160	160	—	—	—	—
#12 x 4½	T12450WP, S12450WP	3.2	205	205	205	205	—	—	—	160	160	160	160	—	—	—
#12 x 5	T12500WP, S12500WP	3.5	205	205	205	205	205	—	—	160	160	160	160	160	—	—
#12 x 6	T12600WP	4.0	205	205	205	205	205	180	180	160	160	160	160	160	150	150
#14 x 3	T14300WP	2.1	220	—	—	—	—	—	—	170	—	—	—	—	—	—
#14 x 3½	T14350WP, S14350WP	2.3	230	220	—	—	—	—	—	180	180	—	—	—	—	—
#14 x 4	T14400WP, S14400WP	2.8	230	220	220	—	—	—	—	180	180	175	—	—	—	—
#14 x 5	T14500WP	3.5	230	220	220	220	220	—	—	180	180	175	175	165	—	—
#14 x 6	T14600WP	4.2	230	220	220	220	210	210	210	180	180	175	175	165	165	165

1. All applications are based on full penetration into the main member. Full penetration is the screw length minus the side member thickness.
2. Allowable loads are shown at the wood load duration factor of C_D = 1.0. Loads may be increased for load duration per the building code up to a C_D = 1.6.
3. Tabulated values must be multiplied by all applicable adjustment factors per the NDS.
4. For in-service moisture content greater than 19%, use C_M = 0.7.
5. The tabulated loads are applicable to Type 305 and Type 316 stainless-steel flat-head screw model numbers.
6. Loads are based on installation into the side grain of the wood with the screw axis perpendicular to the face of the member.
7. Minimum fastener spacing requirements to achieve loads: 6" end distance, 1 7/16" edge distance.
8. The above loads are based on tests of connections with main and side members of the same species.

C-F-2023TECHSUP © 2023 Simpson Strong-Tie Company Inc.

Strong-Drive®
DWP **WOOD SS** Screw (cont.)

DWP WOOD SS Screw — Allowable Withdrawal and Pull-Through Loads

Size x Length (in.)	Model No.	Thread Length (in.)	Head Diameter (in.)	Allowable Screw Tension Loads (lb.)	Reference Withdrawal Loads, W (lb./in.)		Reference Pull-Through Loads for 1½" Side Member, W_H (lb.)	
					DFL/SP	SPF/HF	DFL/SP	SPF/HF
#12 x 2½	T12250WP, S12250WP	2.0	0.44	605	130	100	180	150
#12 x 3	T12300WP, S12300WP	2.2						
#12 x 3½	T12350WP, S12350WP	2.5						
#12 x 4	T12400WP, S12400WP	2.8						
#12 x 4½	T12450WP, S12450WP	3.2						
#12 x 5	T12500WP, S12500WP	3.5						
#12 x 6	T12600WP	4.0						
#14 x 3	T14300WP	2.1	0.46	775	145	100	200	155
#14 x 3½	T14350WP, S14350WP	2.3						
#14 x 4	T14400WP, S14400WP	2.8						
#14 x 5	T14500WP	3.5						
#14 x 6	T14600WP	4.2						

1. The tabulated allowable screw tension value is the tensile strength of the steel screw and may not be multiplied by any adjustment factors.
2. The tabulated reference withdrawal design value, W, is in pounds per inch of the thread penetration into the side grain of the main member.
3. The tabulated reference pull-through design value, P, is the allowable load for the fastener head pull-through for a minimum 1½"-thick side member.
4. Tabulated reference withdrawal and pull-through design values, W and W_H, are shown at a load duration factor, C_D = 1.0 and a wet service factor, C_M = 1.0. Loads may be increased for load duration per the building code up to a C_D = 1.6. Tabulated values must be multiplied by all applicable adjustment factors from the NDS as referenced in the IBC or IRC.
5. Embedded thread length is that portion held in the main member including the screw point.
6. For in-service moisture content greater than 19%, use C_M = 0.7.
7. For #12 screws subject to axial loading only, use the following minimum dimensions: end distance = 2⅜", edge distance = 1", spacing parallel to grain = 1⅝", spacing perpendicular to grain = 1".
8. For #14 screws subject to axial loading only, use the following minimum dimensions: end distance = 2¾", edge distance = 1⅛", spacing parallel to grain = 2", spacing perpendicular to grain = 1⅛".

C-F-2023TECHSUP © 2023 Simpson Strong-Tie Company Inc.

Strong-Drive®
SDWS TIMBER SS Screw

Structural Wood and Engineered Wood Connections Including Docks, Piers, Boardwalks and Ledgers, Applications Requiring High to Severe Corrosion Resistance

Deisgned to provide an easy-to-install, low-torque driving, high-strength, severe-corrosion-resistant alternative to through bolting, traditional lags and spikes. The Strong-Drive SDWS Timber SS screw is a premium solution for heavy-duty structural applications. Type 316 stainless steel provides severe corrosion resistance, making it suitable for exterior and preservative-treated wood applications.

Codes/Standards: IAPMO UES ER-192 (including City of LA Supplement), State of Florida FL13975

US Patent 9,523,383

For more information, see p. 60, C-F-2023 *Fastening Systems* catalog

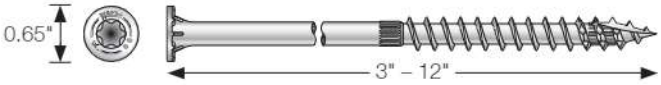

SDWS Timber SS — Allowable Shear Loads — Douglas Fir–Larch, Southern Pine Lumber

Length (in.)	Model No.	Thread Length (in.)	Reference DFL/SP Allowable Shear Loads (lb.) Wood Side Member Thickness (in.)								Reference Withdrawal Design Value, W (lb./in.)	Max. Reference Withdrawal Design Value, W_{max} (lb.)
			1.5	2.5	3	3.5	4.5	6	8	10		
4	SDWS27300SS	2	225	—	—	—	—	—	—	—	222	410
4	SDWS27400SS	3	375	225	—	—	—	—	—	—	204	410
5	SDWS27500SS	3	375	335	310	210	—	—	—	—	204	410
6	SDWS27600SS	3	375	335	335	335	210	—	—	—	204	410
8	SDWS27800SS	3	375	415	485	440	335	275	—	—	204	410
10	SDWS271000SS	3	375	415	485	440	335	275	275	—	204	410
12	SDWS271200SS	3	375	415	485	440	335	275	275	275	204	410

See footnotes below.

SDWS Timber SS — Allowable Shear Loads — Hem-Fir, Spruce-Pine-Fir Lumber

Length (in.)	Model No.	Thread Length (in.)	Reference HF/SPF Allowable Shear Loads (lb.) Wood Side Member Thickness (in.)								Reference Withdrawal Design Value, W (lb./in.)	Max. Reference Withdrawal Design Value, W_{max} (lb.)
			1.5	2.5	3	3.5	4.5	6	8	10		
3	SDWS27300SS	2	210	—	—	—	—	—	—	—	182	365
4	SDWS27400SS	3	325	180	—	—	—	—	—	—	200	385
5	SDWS27500SS	3	325	285	235	175	—	—	—	—	200	385
6	SDWS27600SS	3	325	285	285	285	175	—	—	—	200	385
8	SDWS27800SS	3	325	350	390	465	280	240	—	—	200	385
10	SDWS271000SS	3	325	350	390	465	280	240	240	—	200	385
12	SDWS271200SS	3	325	350	390	465	280	240	240	240	200	385

1. All applications are based on full penetration into the main member. Full penetration is the screw length minus the side member thickness.
2. Allowable loads are shown at the wood load duration factor of C_D = 1.0. Loads may be increased for load duration per the building code up to a C_D = 1.6. Tabulated values must be multiplied by all applicable adjustment factors per the NDS.
3. For minimum fastener spacing requirements for both side and main members, see the Spacing Requirements Figure and Table on p. 52.
4. For in-service moisture content greater than 19%, use C_M = 0.7.
5. Loads are based on installation into the side grain of the wood with the screw axis perpendicular to the face of the member.
6. The tabulated reference withdrawal design value, W, is in pounds per inch of the thread penetration into the side grain of the main member.
7. The tabulated reference withdrawal design value, W_{max}, is in pounds where the entire thread length must penetrate into the side grain of the main member.
8. Embedded thread length is that portion held in the main member, including the screw point.
9. Values are based on the lesser of withdrawal from the main member or pull-through of a 1 ½" side member.

C-F-2023TECHSUP © 2023 Simpson Strong-Tie Company Inc.

Strong-Drive®
SDWS TIMBER SS Screw (cont.)

SDWS Timber SS Screw Spacing Requirements

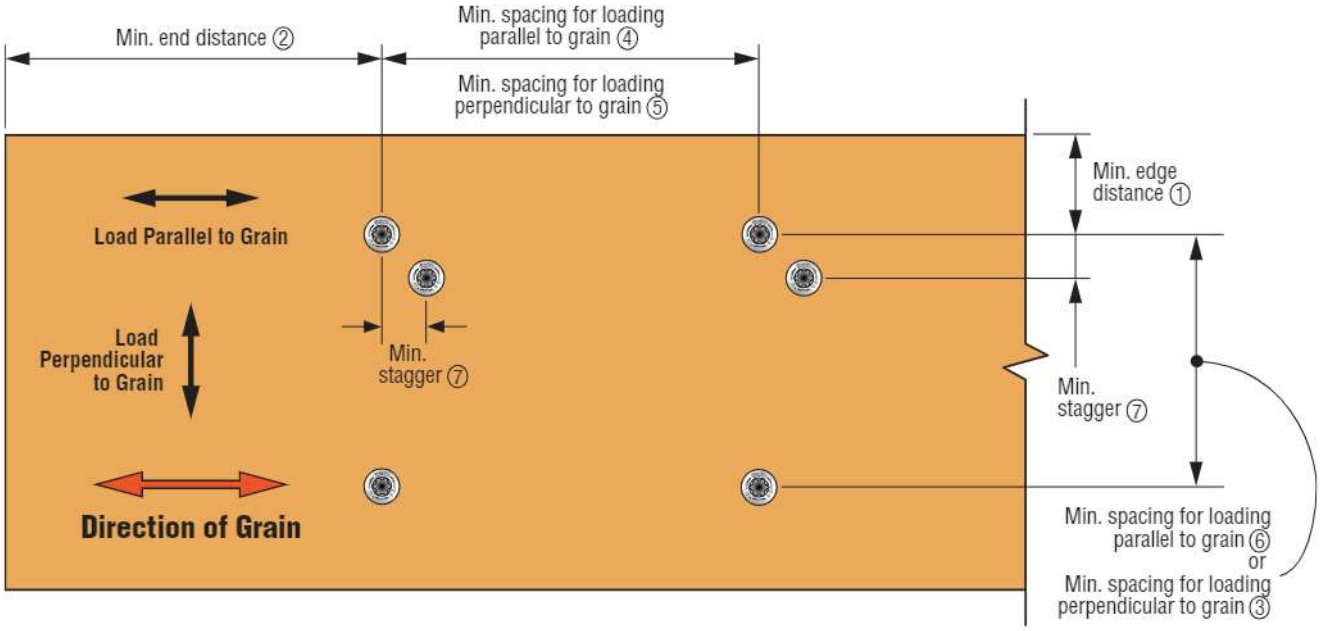

SDWS Timber SS Screw Spacing Requirements

Condition	Direction of Load to Grain	ID	Minimum Distance or Spacing (in.)
Edge Distance	Perpendicular	①	1½
	Parallel	①	1½
End Distance	Perpendicular	②	6
	Parallel	②	6
Spacing Between Fasteners in a Row	Perpendicular	③	4
	Parallel	④	8
Spacing Between Rows of Fasteners	Perpendicular	⑤	4
	Parallel	⑥	4
Spacing Between Staggered Rows	Perpendicular or Parallel	⑦	¾

1. For axial loading only, use the following minimum dimensions: end distance = 4", edge distance = 1⅝", spacing parallel to grain = 2⅞", spacing perpendicular to grain = 2".

C-F-2023TECHSUP © 2023 Simpson Strong-Tie Company Inc.

Strong-Drive®
SDWS **TIMBER** Screw (Interior Grade)

Mass Timber, Log Building Construction and General Interior Applications

Codes/Standards: IAPMO UES ER-192 (including City of LA Supplement), State of Florida FL13975

US Patent: 9,523,383

For more information, see p. 102, C-F-2023 *Fastening Systems* catalog

SDWS TIMBER Screw (Interior Grade) — Allowable Shear Loads — Douglas Fir–Larch and Southern Pine

Length (in.)	Model No.	Thread Length (in.)	Reference DFL/SP Allowable Shear Loads (lb.)														
			Wood Side Member Thickness (in.)														
			1.5	2	2.5	3	3.5	4	4.5	5	5.5	6	7	8	9	10	13
6	SDWS19600	3	370	265	265	265	265	245	245	—	—	—	—	—	—	—	—
7.5	SDWS19712	3	370	265	265	265	265	245	245	245	245	245	—	—	—	—	—
4	SDWS22400	2.375	405	405	305	—	—	—	—	—	—	—	—	—	—	—	—
5	SDWS22500	3	405	405	360	360	325	—	—	—	—	—	—	—	—	—	—
5½	SDWS22512	3	405	405	405	360	360	325	—	—	—	—	—	—	—	—	—
6	SDWS22600	3	405	405	405	405	365	365	355	—	—	—	—	—	—	—	—
8	SDWS22800	3	405	405	405	405	395	395	395	395	395	395	—	—	—	—	—
9	SDWS22900	3	405	405	405	405	395	395	395	395	395	395	395	—	—	—	—
10	SDWS221000	3	405	405	405	405	395	395	395	395	395	395	395	395	—	—	—
11	SDWS221100	3	405	405	405	405	395	395	395	395	395	395	395	395	395	—	—
12	SDWS221200	3	405	405	405	405	395	395	395	395	395	395	395	395	395	395	—
15	SDWS221500	3	405	405	405	405	395	395	395	395	395	395	395	395	395	395	395

See footnotes below.

SDWS TIMBER Screw (Interior Grade) — Allowable Shear Loads — Spruce-Pine-Fir and Hem-Fir

Length (in.)	Model No.	Thread Length (in.)	Reference SPF/HF Allowable Shear Loads (lb.)														
			Wood Side Member Thickness (in.)														
			1.5	2	2.5	3	3.5	4	4.5	5	5.5	6	7	8	9	10	13
6	SDWS19600	3	350	265	265	265	265	215	180	—	—	—	—	—	—	—	—
7.5	SDWS19712	3	350	265	265	265	265	215	215	215	215	180	—	—	—	—	—
4	SDWS22400	2.375	385	285	215	—	—	—	—	—	—	—	—	—	—	—	—
5	SDWS22500	3	400	290	290	290	195	—	—	—	—	—	—	—	—	—	—
5½	SDWS22512	3	400	290	290	290	290	195	—	—	—	—	—	—	—	—	—
6	SDWS22600	3	400	365	365	365	310	310	210	—	—	—	—	—	—	—	—
8	SDWS22800	3	400	365	365	365	310	310	280	280	280	280	—	—	—	—	—
9	SDWS22900	3	400	365	365	365	310	310	280	280	280	280	280	—	—	—	—
10	SDWS221000	3	400	365	365	365	310	310	280	280	280	280	280	280	—	—	—
11	SDWS221100	3	400	365	365	365	310	310	280	280	280	280	280	280	280	—	—
12	SDWS221200	3	400	365	365	365	310	310	280	280	280	280	280	280	280	280	—
15	SDWS221500	3	400	365	365	365	310	310	280	280	280	280	280	280	280	280	280

1. Design values are based on full fastener embedment and the adjacent members are in contact with each other.
2. Allowable loads are shown at the wood load duration factor of C_D = 1.0. Loads may be increased for load duration up to a C_D = 1.6.
3. Tabulated values must be multiplied by all applicable adjustment factors per the NDS.
4. For minimum fastener spacing requirements for both side and main members, see the Spacing Requirements Figure and Table on p. 54.
5. Loads are for in-service moisture content less than or equal to 19% (C_M = 1.0).
6. Loads are based on installation into the side grain of the wood member with the screw axis perpendicular to the face of the wood member.

C-F-2023TECHSUP © 2023 Simpson Strong-Tie Company Inc.

Strong-Drive®
SDWS **TIMBER** Screw (Interior Grade) (cont.)

SDWS Timber Screw (Interior Grade) Spacing Requirements

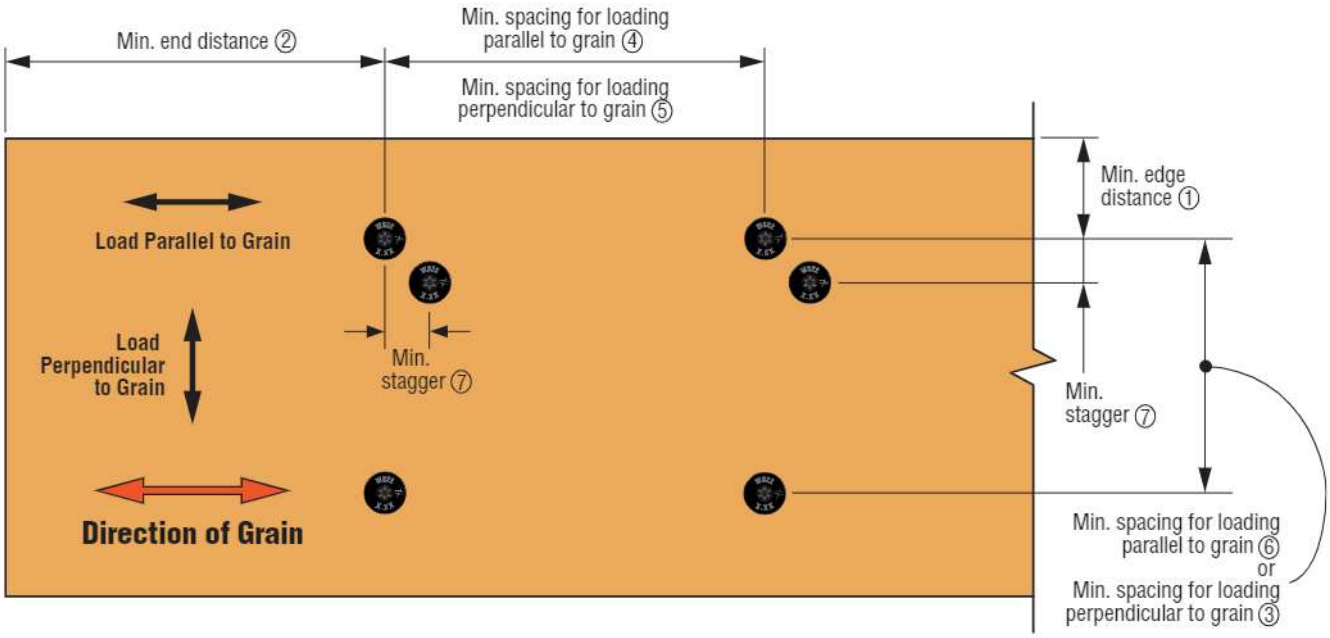

SDWS Timber Screw (Interior Grade) Spacing Requirements

Condition	Direction of Load to Grain	ID	Minimum Distance or Spacing (in.)
Edge Distance	Perpendicular	①	1 7/16
	Parallel	①	1 7/16
End Distance	Perpendicular	②	6
	Parallel	②	6
Spacing Between Fasteners in a Row	Perpendicular	③	4
	Parallel	④	8
Spacing Between Rows of Fasteners	Perpendicular	⑤	4
	Parallel	⑥	4
Spacing Between Staggered Rows	Perpendicular or Parallel	⑦	5/8

1. For SDWS19 screws subject to axial loading only, use the following minimum dimensions: end distance = 2¾", edge distance = 1⅛", spacing parallel to grain = 2", spacing perpendicular to grain = 1⅛".
2. For SDWS22 screws subject to axial loading only, use the following minimum dimensions: end distance = 3¼", edge distance = 1⅜", spacing parallel to grain = 2¼", spacing perpendicular to grain = 1⅜".

C-F-2023TECHSUP © 2023 Simpson Strong-Tie Company Inc.

Strong-Drive®
SDWS TIMBER Screw (Interior Grade) (cont.)

SDWS TIMBER Screw (Interior Grade) — Allowable Withdrawal Loads Douglas Fir–Larch, Southern Pine, Spruce-Pine-Fir and Hem-Fir Lumber

Length (in.)	Model No.	Length (in.)	Thread Length (in.)	Reference Withdrawal Design Value, W (lb./in.)		Max. Reference Withdrawal Design Value, W_{max} (lb.)	
				DFL/SP Main Member	SPF/HF Main Member	DFL/SP Main Member	SPF/HF Main Member
6	SDWS19600	6	3	197	164	545	395
7.5	SDWS19712	7.5	3	197	164	545	395
4	SDWS22400	4	2.375	179	160	425	380
5	SDWS22500	5	3	214	187	590	495
5½	SDWS22512	5.5	3	214	187	590	495
6	SDWS22600	6	3	214	187	590	495
8	SDWS22800	8	3	214	187	590	495
9	SDWS22900	9	3	214	187	590	495
10	SDWS221000	10	3	214	187	590	495
11	SDWS221100	11	3	214	187	590	495
12	SDWS221200	12	3	214	187	590	495
15	SDWS221500	15	3	214	187	590	495

1. The tabulated reference withdrawal design value, W, is in pounds per inch of the thread penetration into the side grain of the main member.
2. The tabulated reference withdrawal design value, W_{max}, is in pounds where the entire thread must penetrate into the side grain of the main member.
3. Tabulated reference withdrawal design values (C_D = 1.0), W and W_{max}, must be multiplied by all applicable adjustment factors from the NDS as referenced in the IBC or IRC.
4. Embedded thread length is that portion held in the main member, including the screw point.
5. Values are based on the lesser of withdrawal from the main member or pull-through of a 1.5" side member.
6. Loads are for in-service moisture content less than or equal to 19% (C_M = 1.0).

Allowable Loads for Strong-Drive SDWS TIMBER Screw (Interior Grade) with Expanded Specific Gravity Options

Allowable load tables on the following pages provide shear and withdrawal capacities for wood species with an assigned specific gravity of 0.35 to 0.41. Wood species with a specific gravity within this range are provided below.

Wood Species Combinations in the Specific Gravity Range 0.35 to 0.41

Wood Species	Specific Gravity[1]
Alaska Spruce	0.41
Aspen	0.39
Balsam Fir	0.36
Coast Sitka Spruce	0.39
Cottonwood	0.41
Eastern Hemlock	0.41
Eastern Hemlock-Balsam Fir	0.36
Eastern Hemlock-Tamarack	0.41
Eastern Softwoods	0.36
Eastern Spruce	0.41
Eastern White Pine	0.36
Engelmann Spruce-Lodgepole Pine	0.38
Northern Species	0.35
Redwood, open grain	0.37
Spruce-Pine-Fir (South)	0.36
Western Cedars	0.36
Western Cedars (North)	0.35
Western White Pine	0.40
Western Woods	0.36

1. Specific gravity as assigned in NDS-18 Table 12.3.3A.

C-F-2023TECHSUP © 2023 Simpson Strong-Tie Company Inc.

Strong-Drive®
SDWS **TIMBER** Screw (Interior Grade) (cont.)

SDWS TIMBER Screw (Interior Grade) — Allowable Lateral Loads in the Specific Gravity Range 0.35 to 0.41

Length (in.)	Model No.	Thread Length (in.)	Reference Allowable Lateral Design Value (lb.)													
			Wood Side Member Thickness (in.)													
			1.5	2	2.5	3	3.5	4	5	5.5	6	7	8	9	10	13
6	SDWS19600	3	330	230	230	230	230	230	—	—	—	—	—	—	—	—
7.5	SDWS19712	3	330	230	230	230	230	230	230	230	—	—	—	—	—	—
4	SDWS22400	2.375	350	240	—	—	—	—	—	—	—	—	—	—	—	—
5	SDWS22500	3	350	240	240	240	—	—	—	—	—	—	—	—	—	—
5½	SDWS22512	3	350	240	240	240	240	—	—	—	—	—	—	—	—	—
6	SDWS22600	3	350	240	240	240	240	240	—	—	—	—	—	—	—	—
8	SDWS22800	3	350	240	240	240	240	240	240	240	240	—	—	—	—	—
9	SDWS22900	3	350	240	240	240	240	240	240	240	240	240	—	—	—	—
10	SDWS221000	3	350	240	240	240	240	240	240	240	240	240	240	—	—	—
11	SDWS221100	3	350	240	240	240	240	240	240	240	240	240	240	240	—	—
12	SDWS221200	3	350	240	240	240	240	240	240	240	240	240	240	240	240	—
15	SDWS221500	3	350	240	240	240	240	240	240	240	240	240	240	240	240	240

1. Design values are based on full fastener embedment and the adjacent members are in contact with each other.
2. Allowable loads are shown at the wood load duration factor of $C_D = 1.0$. Loads may be increased for load duration per the building code up to a $C_D = 1.6$. Tabulated values must be multiplied by all applicable adjustment factors per the NDS.
3. For minimum fastener spacing requirements for both side and main members, see the Spacing Requirements Figure and Table on p. 54.
4. For in-service moisture content less than or equal to 19%, $C_M = 1.0$.

C-F-2023TECHSUP © 2023 Simpson Strong-Tie Company Inc.

Strong-Drive®
SDWS **TIMBER** Screw (Interior Grade) (cont.)

SDWS TIMBER Screw (Interior Grade) — Allowable Withdrawal Loads in the Specific Gravity Range 0.35 to 0.41

Length (in.)	Model No.	Thread Length (in.)	Reference Withdrawal Design Value, W (lb./in.)	Max. Reference Withdrawal Design Value, W_{max} (lb.)[5]
6	SDWS19600	3	100	280
7.5	SDWS19712	3	100	280
4	SDWS22400	2.375	130	310
5	SDWS22500	3	130	360
5½	SDWS22512	3	130	360
6	SDWS22600	3	130	360
8	SDWS22800	3	130	360
9	SDWS22900	3	130	360
10	SDWS221000	3	130	360
11	SDWS221100	3	130	360
12	SDWS221200	3	130	360
15	SDWS221500	3	130	360

1. The tabulated reference withdrawal design value, W, is in pounds per inch of the thread penetration into the side grain of the main member.
2. The tabulated reference withdrawal design value, W_{max}, is in pounds where the entire thread must penetrate into the side grain of the main member.
3. Tabulated reference withdrawal design values, W and W_{max}, are shown at the wood load duration factor of C_D = 1.0. Loads may be increased for load duration per the building code up to a C_D = 1.6. Tabulated values must be multiplied by all applicable adjustment factors per the NDS as referenced in the IBC or IRC.
4. Embedded thread length is that portion held in the main member including the screw point.
5. Values are based on the lesser of withdrawal from the main member or pull-through of a 1.5" side member.
6. For in-service moisture content less than or equal to 19% (C_M = 1.0).
7. The load tables are based on testing in accordance with ICC-ES AC233, with an applied factor of safety of 5.0.

C-F-2023TECHSUP © 2023 Simpson Strong-Tie Company Inc.

Strong-Drive®
SDWH TIMBER-HEX Screw

Structural Wood-to-Wood Connections Including Ledgers, Indoor/Outdoor Projects

Double-barrier coating provides corrosion resistance equivalent to hot-dip galvanization, making it suitable for certain exterior and preservative-treated wood applications, as described in the evaluation report.

Codes/Standards: IAPMO UES ER-192 (including City of LA Supplement), State of Florida FL13975

US Patent 9,523,383

For more information, see p. 61, C-F-2023 *Fastening Systems* catalog

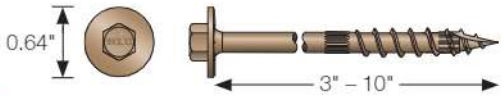

SDWH Timber-Hex Screw — Allowable Shear Loads — Douglas Fir–Larch and Southern Pine Lumber

Length (in.)	Model No.	Thread Length (in.)	Reference DFL/SP Allowable Shear Loads (lb.)								
			Wood Side Member Thickness (in.)								
			1.5	2	2.5	3	3.5	4	4.5	6	8
3	SDWH19300DB	1½	285	—	—	—	—	—	—	—	—
4	SDWH19400DB	2⅜	370	300	300	—	—	—	—	—	—
6	SDWH19600DB	2¾	370	265	265	265	265	245	245	—	—
8	SDWH19800DB	2¾	370	265	265	265	265	265	260	245	—
10	SDWH191000DB	2¾	370	265	265	265	265	265	260	260	245

See footnotes below.

SDWH Timber-Hex Screw — Allowable Shear Loads — Spruce-Pine-Fir and Hem-Fir Lumber

Length (in.)	Model No.	Thread Length (in.)	Reference SPF/HF Allowable Shear Loads (lb.)								
			Wood Side Member Thickness (in.)								
			1.5	2	2.5	3	3.5	4	4.5	6	8
3	SDWH19300DB	1½	230	—	—	—	—	—	—	—	—
4	SDWH19400DB	2⅜	330	235	195	—	—	—	—	—	—
6	SDWH19600DB	2¾	350	265	265	265	265	215	180	—	—
8	SDWH19800DB	2¾	350	265	265	265	265	265	215	215	—
10	SDWH191000DB	2¾	350	265	265	265	265	265	250	250	215

1. All applications are based on full penetration into the main member. Full penetration is the screw length minus the side member thickness.
2. Allowable loads are shown at the wood load duration factor of $C_D = 1.0$. Loads may be increased for load duration per the building code up to a $C_D = 1.6$. Tabulated values must be multiplied by all applicable adjustment factors per the NDS.
3. For minimum fastener spacing requirements for both side and main members, see the Spacing Requirements Figure and Table on the next page.
4. For in-service moisture content greater than 19%, use $C_M = 0.7$.
5. Loads are based on installation into the side grain of the wood with the screw axis perpendicular to the face of the member.

C-F-2023TECHSUP © 2023 Simpson Strong-Tie Company Inc.

Strong-Drive®
SDWH TIMBER-HEX Screw (cont.)

SDWH Timber-Hex Screw — Allowable Withdrawal Loads — Douglas Fir–Larch, Southern Pine, Spruce-Pine-Fir and Hem-Fir Lumber

Length (in.)	Model No.	Length (in.)	Thread Length (in.)	Reference Withdrawal Design Value, W (lb./in.)		Max. Reference Withdrawal Design Value, W_{max} (lb.)	
				DFL and SP Main Member	HF and SPF Main Member	DFL and SP Main Member	HF and SPF Main Member
3	SDWH19300DB	3	1½	177	120	265	180
4	SDWH19400DB	4	2⅜	192	147	455	350
6	SDWH19600DB	6	2¾	197	164	545	445
8	SDWH19800DB	8	2¾	197	164	545	445
10	SDWH191000DB	10	2¾	197	164	545	445

1. The tabulated reference withdrawal design value, W, is in pounds per inch of the thread penetration into the side grain of the main member.
2. The tabulated reference withdrawal design value, W_{max}, is in pounds where the entire thread length must penetrate into the side grain of the main member.
3. Tabulated reference withdrawal design values, W and W_{max}, are shown at a C_D = 1.0. Loads may be increased for load duration per the building code up to a C_D = 1.6. Tabulated values must be multiplied by all applicable adjustment factors from the NDS as referenced in the IBC or IRC.
4. Embedded thread length is that portion held in the main member, including the screw point.
5. Values are based on the lesser of withdrawal from the main member or pull-through of a 1½" side member.
6. For in-service moisture content greater than 19%, use C_M = 0.7.

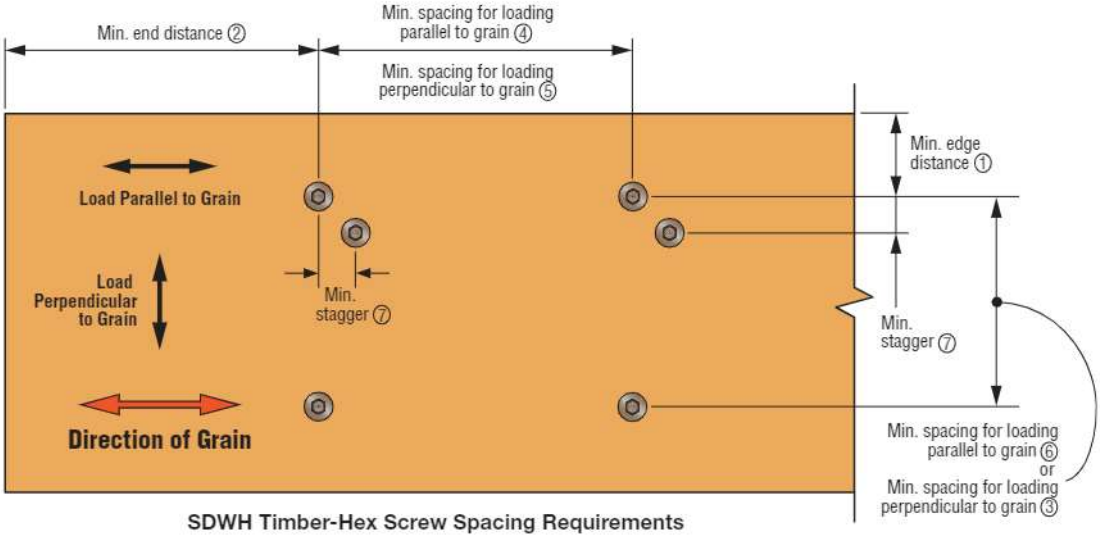

SDWH Timber-Hex Screw Spacing Requirements

SDWH Timber-Hex Screw Spacing Requirements

Condition	Direction of Load to Grain	ID	Minimum Distance or Spacing (in.)
Edge Distance	Perpendicular	①	1 7/16
	Parallel	①	1 7/16
End Distance	Perpendicular	②	6
	Parallel	②	6
Spacing Between Fasteners in a Row	Perpendicular	③	4
	Parallel	④	8
Spacing Between Rows of Fasteners	Perpendicular	⑤	4
	Parallel	⑥	4
Spacing Between Staggered Rows	Perpendicular or Parallel	⑦	⅝

1. For axial loading only, use the following minimum dimensions: end distance = 2¾", edge distance = 1⅛", spacing parallel to grain = 2", spacing perpendicular to grain = 1⅛".

C-F-2023TECHSUP © 2023 Simpson Strong-Tie Company Inc.

Strong-Drive®
SDWH **TIMBER-HEX** Screw with Gypsum Board Interlayer(s)

The Strong-Drive SDWH Timber-Hex screw may be installed with one or two layers of ⅝" gypsum board. This layer of gypsum is to be located between the side member and the main member for a standard connection. See table for the required screw lengths and allowable loads for these applications. Loads are derived from assembly testing based on ICC-ES AC233.

SDWH Timber-Hex Screw — Douglas Fir–Larch and Southern Pine Lumber Allowable Single Shear Loads with One Layer of ⅝" Gypsum Board

Length (in.)	Model No.	Thread Length (in.)	Reference DFL/SP Allowable Shear Loads (lb.)								
			Wood Side Member Thickness (in.)								
			1.5	2.0	2.5	3.0	3.5	4.0	4.5	6.0	8.0
4	SDWH19400DB	2.375	240	—	—	—	—	—	—	—	—
6	SDWH19600DB	2.77	240	170	170	170	170	—	—	—	—
8	SDWH19800DB	2.77	240	170	170	170	170	170	170	—	—
10	SDWH191000DB	2.77	240	170	170	170	170	170	170	170	—

See notes on following page.

SDWH Timber-Hex Screw — Douglas Fir–Larch and Southern Pine Lumber Allowable Single Shear Loads with Two Layers of ⅝" Gypsum Board

Length (in.)	Model No.	Thread Length (in.)	Reference DFL/SP Allowable Shear Loads (lb.)								
			Wood Side Member Thickness (in.)								
			1.5	2.0	2.5	3.0	3.5	4.0	4.5	6.0	8.0
4	SDWH19400DB	2.375	—	—	—	—	—	—	—	—	—
6	SDWH19600DB	2.77	240	170	170	170	—	—	—	—	—
8	SDWH19800DB	2.77	240	170	170	170	170	170	170	—	—
10	SDWH191000DB	2.77	240	170	170	170	170	170	170	170	—

See notes on following page.

SDWH Timber-Hex Screw — Spruce-Pine-Fir and Hem-Fir Lumber Allowable Single Shear Loads with One Layer of ⅝" Gypsum Board

Length (in.)	Model No.	Thread Length (in.)	Reference SPF/HF Allowable Shear Loads (lb.)								
			Wood Side Member Thickness (in.)								
			1.5	2.0	2.5	3.0	3.5	4.0	4.5	6.0	8.0
4	SDWH19400DB	2.375	215	—	—	—	—	—	—	—	—
6	SDWH19600DB	2.77	230	170	170	170	170	—		—	—
8	SDWH19800DB	2.77	230	170	170	170	170	170	140	—	—
10	SDWH191000DB	2.77	230	170	170	170	170	170	165	165	—

See notes on following page.

C-F-2023TECHSUP © 2023 Simpson Strong-Tie Company Inc.

Strong-Drive®
SDWH TIMBER-HEX Screw with Gypsum Board Interlayer(s) (cont.)

SDWH Timber-Hex Screw — Spruce-Pine-Fir and Hem-Fir Lumber Allowable Single Shear Loads with Two Layers of ⅝" Gypsum Board

Length (in.)	Model No.	Thread Length (in.)	Reference SPF/HF Allowable Shear Loads (lb.)								
			Wood Side Member Thickness (in.)								
			1.5	2.0	2.5	3.0	3.5	4.0	4.5	6.0	8.0
4	SDWH19400DB	2.375	215	—	—	—	—	—	—	—	—
6	SDWH19600DB	2.77	230	170	170	170	—	—	—	—	—
8	SDWH19800DB	2.77	230	170	170	170	170	170	140	—	—
10	SDWH191000DB	2.77	230	170	170	170	170	170	165	165	—

1. All applications are based on full penetration which equals fastener length minus side member thickness.
2. Allowable loads are shown at the wood load duration factor of C_D = 1.0. Loads may be increased for load duration per the building code up to a C_D = 1.6. Tabulated values must be multiplied by all applicable adjustment factors per the NDS.
3. For minimum fastener spacing requirements for both side and main members, see the Spacing Requirements Figure and Table below.
4. For in-service moisture content greater than 19%, use C_M = 0.7.
5. Gypsum board must be attached as required per the building code.

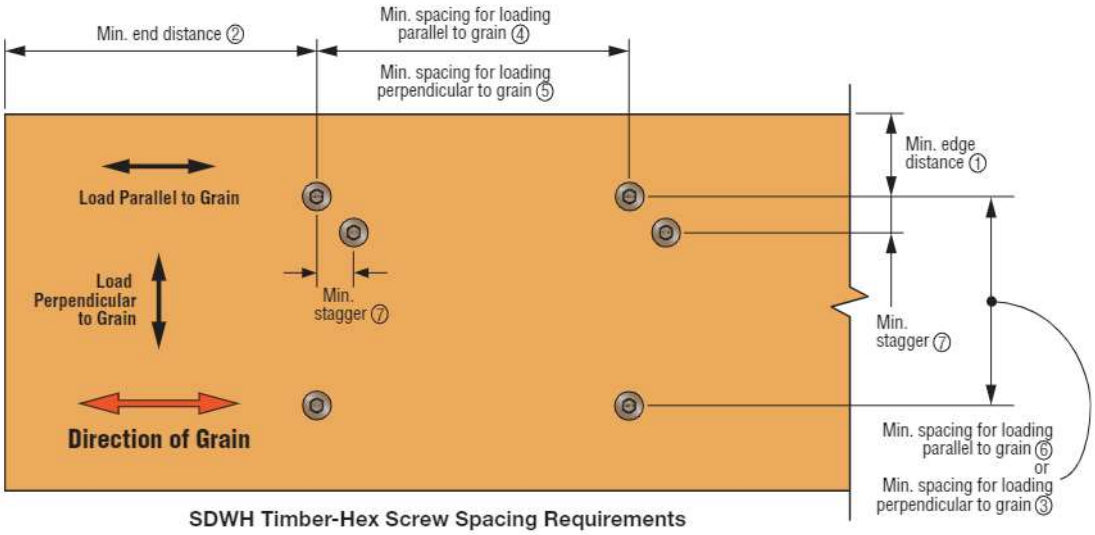

SDWH Timber-Hex Screw Spacing Requirements

SDWH Timber-Hex Screw Spacing Requirements

Condition	Direction of Load to Grain	ID	Minimum Distance or Spacing (in.)
Edge Distance	Perpendicular	①	1 7/16
	Parallel	①	1 7/16
End Distance	Perpendicular	②	6
	Parallel	②	6
Spacing Between Fasteners in a Row	Perpendicular	③	4
	Parallel	④	8
Spacing Between Rows of Fasteners	Perpendicular	⑤	4
	Parallel	⑥	4
Spacing Between Staggered Rows	Perpendicular or Parallel	⑦	⅝

1. For axial loading only, use the following minimum dimensions: end distance = 2¾", edge distance = 1⅛", spacing parallel to grain = 2", spacing perpendicular to grain = 1⅛".

C-F-2023TECHSUP © 2023 Simpson Strong-Tie Company Inc.

Strong-Drive®
SDWH TIMBER-HEX HDG Screw

Structural Wood-to-Wood Connections, Indoor/Outdoor Projects, Applications Requiring High to Severe Corrosion Resistance

The Strong-Drive line of structural screws includes a 0.276"-diameter ASTM A153, Class C hot-dip galvanized screw suitable for heavy-duty marine and coastal applications. The SDWH Timber-Hex HDG screw has a SawTooth® point and oversized integral washer that makes for fast installations; no predrilling or separate washer needed.

Codes/Standards: IAPMO UES ER-192 (including City of LA Supplement), State of Florida FL13975

US Patent 9,523,383

For more information, see p. 63, C-F-2023 *Fastening Systems* catalog

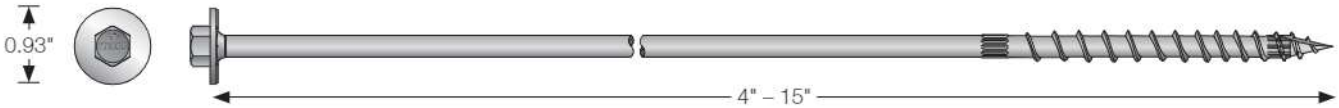

SDWH Timber-Hex HDG Screw — Allowable Single Shear and Withdrawal Loads

Length (in.)	Model No.	Thread Length (in.)	Reference Allowable Shear Loads (lb.)						Reference Allowable Withdrawal Loads, W (lb./in.)			Max. Withdrawal Loads, W_{max} (lb.)		
			Wood Side Member Thickness (in.)											
			SP		DFL		SPF/HF		SP	DFL	SPF/HF	SP	DFL	SPF/HF
			1.5	3	1.5	3	1.5	3						
4	SDWH27400G	3	505	—	440	—	400	—	287	255	212	860	765	635
6	SDWH27600G	3	505	545	440	545	400	450						
8	SDWH27800G	3	570	675	430	675	430	595						
10	SDWH271000G	3	570	675	430	675	430	595						
12	SDWH271200G	3	570	675	430	675	430	595						
15	SDWH271500G	3	570	675	430	675	430	595						

1. All shear loads are based on full penetration into the main member. Full penetration is the screw length minus the side member thickness.
2. Allowable loads are shown at the wood load duration factor of $C_D = 1.0$. Loads may be increased for load duration per the building code up to a $C_D = 1.6$. Tabulated values must be multiplied by all applicable adjustment factors per the NDS.
3. For in-service moisture content greater than 19%: withdrawal $C_M = 0.65$; shear $C_M = 0.70$.
4. For minimum fastener spacing requirements for both side and main members, see the Spacing Requirements Figure and Table on next page.
5. Tabulated loads are for both parallel- and perpendicular-to-grain loading.
6. Maximum withdrawal loads are based on full thread length penetration in the main member.
7. SDWH271500G is not included in IAPMO UES-ER-192.

C-F-2023TECHSUP © 2023 Simpson Strong-Tie Company Inc.

Strong-Drive®
SDWH TIMBER-HEX HDG Screw (cont.)

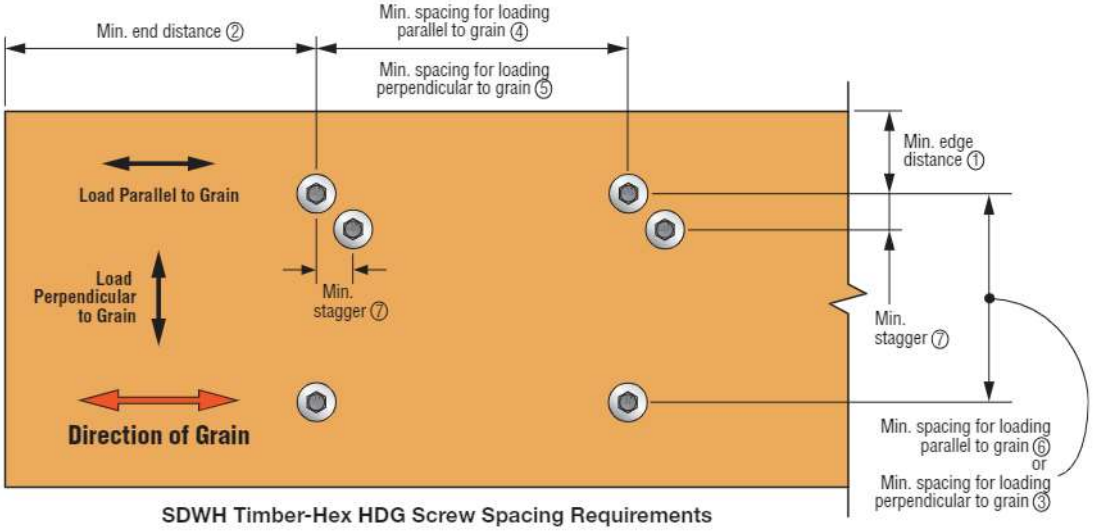

SDWH Timber-Hex HDG Screw Spacing Requirements

SDWH Timber-Hex HDG Screw Spacing Requirements

Condition	Direction of Load to Grain	ID	Minimum Distance or Spacing (in.)
Edge Distance	Perpendicular	①	1 7/16
	Parallel	①	1½
End Distance	Perpendicular	②	6
	Parallel	②	8
Spacing Between Fasteners in a Row	Perpendicular	③	4
	Parallel	④	8[1]
Spacing Between Rows of Fasteners	Perpendicular	⑤	4[2]
	Parallel	⑥	4[2]
Spacing Between Staggered Rows	Perpendicular or Parallel	⑦	⅝[3]

1. Table loads must be multiplied by adjustment factor of 0.80.
2. Table loads must be multiplied by adjustment factor of 0.89.
3. Table loads must be multiplied by adjustment factor of 0.78.
4. For axial loading only, use the following minimum dimensions: end distance = 4", edge distance = 1⅝", spacing parallel to grain = 2⅞", spacing perpendicular to grain = 2".

C-F-2023TECHSUP © 2023 Simpson Strong-Tie Company Inc.

Strong-Drive®
SDWH TIMBER-HEX SS Screw

Structural Wood-to-Wood Connections Including Ledgers, Indoor/Outdoor Projects, Applications Requiring High to Severe Corrosion Resistance

Type 316 stainless steel provides severe corrosion resistance, making it suitable for exterior and preservative-treated wood applications.

For more information, see p. 62, C-F-2023 *Fastening Systems* catalog

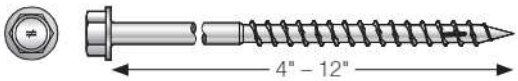

SDWH Timber Hex SS Screw — Allowable Shear Loads — Douglas Fir–Larch, Southern Pine, Spruce-Pine-Fir, Hem-Fir

Length (in.)	Model No.	Thread Length (in.)	Head Diameter (in.)	Reference Allowable Shear Loads (lb.)		
				Wood Side Member Thickness (in.)		
				1½	3	3½
4	SDWH19400SS	2.40	0.46	177	—	—
4½	SDWH19450SS	2.75	0.46	177	177	—
5	SDWH19500SS	2.40	0.46	177	177	177
6	SDWH19600SS	2.40	0.46	177	177	177
8	SDWH19800SS	2.40	0.46	177	177	177
4	SDWH27400SS	3.00	0.65	235	—	—
5	SDWH27500SS	3.00	0.65	235	235	235
6	SDWH27600SS	3.00	0.65	235	235	235
8	SDWH27800SS	3.00	0.65	235	235	235
10	SDWH271000SS	3.00	0.65	235	235	235
12	SDWH271200SS	3.00	0.65	235	235	235

Note: See p. 65 for spacing requirements.

1. All applications are based on full penetration into the main member. Full penetration is the screw length minus the side member thickness.
2. Allowable loads are shown at the load duration factor of C_D = 1.0. Loads may be increased for load duration per the building code up to a C_D = 1.6. Tabulated values must be multiplied by all applicable adjustment factors per the NDS.
3. Table values based on testing in SPF lumber.
4. Design values include NDS wet service factor; no adjustment required for in-service moisture content greater than 19%.
5. Allowable loads are perpendicular or parallel to grain.
6. Installs best with 18V high-torque cordless or ½" low speed drill. If splitting occurs predrill with 5/32" drill bit for SDWH19 screws and 7/32" drill bit for SDWH27 screws.
7. Allowable withdrawal load for the SDWH19 screw for DFL/SP is 155 lb./in. and for SPF/HF is 108 lb./in. Allowable load is based on inches of thread penetration into the main member.
8. Allowable withdrawal load for the SDWH27 screw for DFL/SP is 260 lb./in. and for SPF/HF is 160 lb./in. Allowable load is based on inches of thread penetration into the main member.
9. For LRFD values, the reference connection design values shall be adjusted in accordance with NDS-18, section 11.3.

C-F-2023TECHSUP © 2023 Simpson Strong-Tie Company Inc.

Strong-Drive®
SDWH TIMBER-HEX SS Screw (cont.)

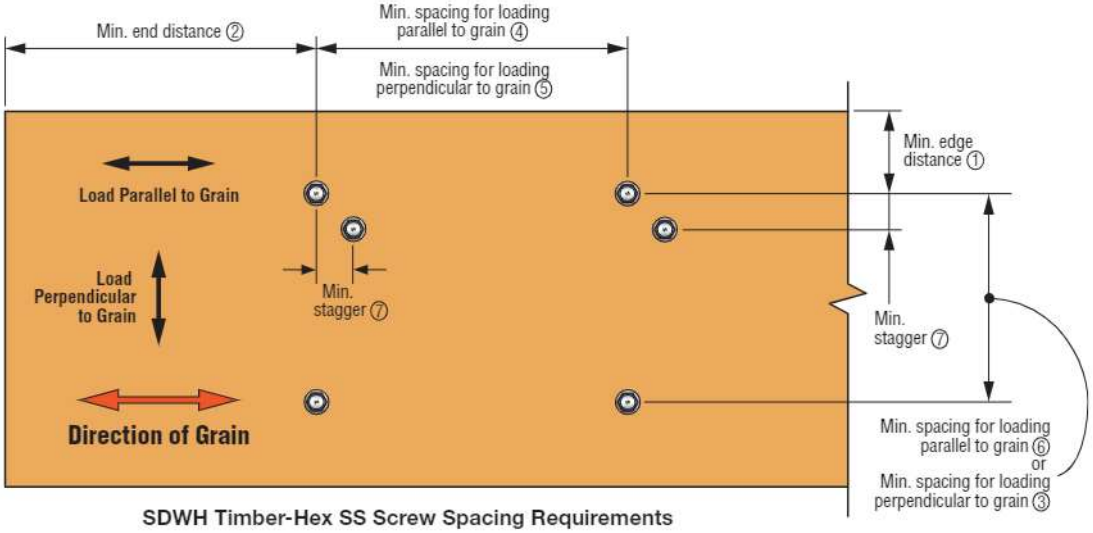

SDWH Timber-Hex SS Screw Spacing Requirements

SDWH Timber-Hex SS Screw Spacing Requirements

Condition	Direction of Load to Grain	ID	Minimum Distance or Spacing (in.)
Edge Distance	Perpendicular	①	1 7/16
	Parallel	①	1 7/16
End Distance	Perpendicular	②	3
	Parallel	②	3
Spacing Between Fasteners in a Row	Perpendicular	③	3
	Parallel	④	3
Spacing Between Rows of Fasteners	Perpendicular	⑤	3
	Parallel	⑥	3
Spacing Between Staggered Rows	Perpendicular or Parallel	⑦	1½

1. For SDWH19 screws subject to axial loading only, use the following minimum dimensions: end distance: = 2⅜", edge distance = 1", spacing parallel to grain = 1⅝", spacing perpendicular to grain = 1".
2. For SDWH27 screws subject to axial loading only, use the following minimum dimensions: end distance = 3¼", edge distance = 1⅜", spacing parallel to grain = 2⅜", spacing perpendicular to grain = 1⅝".

C-F-2023TECHSUP © 2023 Simpson Strong-Tie Company Inc.

Strong-Drive®
SD CONNECTOR Screw

Simpson Strong-Tie Connectors, Indoor/Outdoor Projects

Codes/Standards: ICC-ES ESR-3046 (including City of LA Supplement), State of Florida FL 9589

For more information, see p. 69, C-F-2023 *Fastening Systems* catalog

SD Connector Screw — Allowable Shear Loads for Wood Connections

Size x Length (in.)	Model No.	Thread Length (in.)	Reference DFL/SP Allowable Shear Loads (lb.)			Reference SPF/HF Allowable Shear Loads (lb.)		
			Wood Side Plate Thickness (in.)			Wood Side Plate Thickness (in.)		
			15/32 – ½	23/32 – ¾	1½	15/32 – ½	23/32 – ¾	1½
#9 x 1½	SD9112	1	105	—	—	93	—	—
#9 x 2½	SD9212	1	118	133	130	99	94	109
#10 x 1½	SD10112	1	127	—	—	102	—	—
#10 x 2½	SD10212	1	147	168	152	106	126	123

1. Allowable loads are shown at the wood load duration factor of C_D = 1.00. Loads may be increased for load duration per the building code up to a C_D = 1.60.
2. The 15/32" and 23/32" side members must be plywood or OSB with minimum equivalent specific gravities of 0.50 for DFL and SP design values, and 0.42 for SPF and HF design values. See NDS, Table 12.3.3B for specific WSP grades and associated equivalent specific gravities.
3. Loads are based on connections with main members of DFL/SP or SPF/HF and side members as shown and described in table note 2. Screws shall be installed normal to the surface of the wood members.
4. For minimum fastener spacing requirements for both side and main members, see the Spacing Requirements Figure and Table on p. 67.

SD Connector Screw — Allowable Withdrawal Loads

Size x Length (in.)	Model No.	Thread Length (in.)	Head Diameter (in.)	Reference Allowable Withdrawal Loads, W (lb./in.)	
				DFL/SP Main Member	SPF/HF Main Member
#9 x 1½	SD9112	1	0.37	173	122
#9 x 2½	SD9212				
#10 x 1½	SD10112			173	122
#10 x 2½	SD10212				

1. The tabulated reference allowable withdrawal value, W, is in pounds per inch of the thread penetration into the side grain of the main member.
2. Tabulated reference allowable withdrawal value, W, must be multiplied by all applicable adjustment factors from the NDS as referenced in the IBC or IRC.
3. Embedded thread length is that portion held in the main member including the screw tip.
4. For connections with 15/32" thick plywood or OSB side members, allowable withdrawal loads, W, must be limited by the head pull-through design value of 130 lb.

C-F-2023TECHSUP © 2023 Simpson Strong-Tie Company Inc.

Strong-Drive®
SD CONNECTOR Screw (cont.)

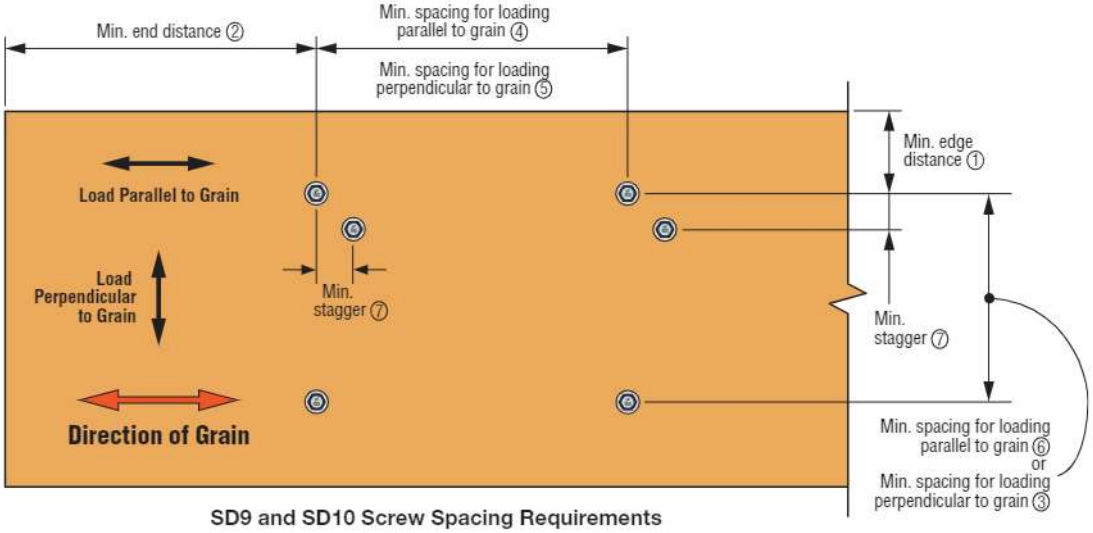

SD9 and SD10 Screw Spacing Requirements

SD Connector Screw Spacing Requirements

Condition	Direction of Load to Grain	ID	Minimum Distance or Spacing (in.)	
			Main Member	Wood Side Member
Edge Distance	Perpendicular	①	1	1
	Parallel	①	½	½
End Distance	Perpendicular	②	2	2 7/16
	Parallel	②	2	2 7/16
Spacing Between Fasteners in a Row	Perpendicular	③	2	2 7/16
	Parallel	④	2	2 7/16
Spacing Between Rows of Fasteners	Perpendicular	⑤	½	13/16
	Parallel	⑥	½	13/16
Spacing Between Staggered Rows	Perpendicular or Parallel	⑦	½	½

1. For SD9 screws subject to axial loading only, use the following minimum dimensions: end distance = 1 7/8", edge distance = 3/4", spacing parallel to grain = 1 1/4", spacing perpendicular to grain = 3/4".
2. For SD10 screws subject to axial loading only, use the following minimum dimensions: end distance = 2", edge distance= 7/8", spacing parallel to grain = 1 1/2", spacing perpendicular to grain = 7/8".

C-F-2023TECHSUP © 2023 Simpson Strong-Tie Company Inc.

Strong-Drive®
SD CONNECTOR SS Screw

For Simpson Strong-Tie Stainless-Steel Connectors

Codes/Standards: ICC-ES ESR-3046 (including City of LA Supplement); State of Florida FL9589

For more information, see p. 70, C-F-2023 *Fastening Systems* catalog

SD Connector SS Screw — Allowable Shear Loads for Wood Connections

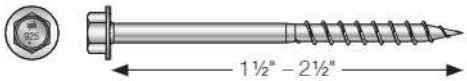

Size x Length (in.)	Model No.	Thread Length (in.)	Reference DFL/SP Allowable Shear Loads (lb.)			Reference SPF/HF Allowable Shear Loads (lb.)		
			Wood Side Plate Thickness (in.)			Wood Side Plate Thickness (in.)		
			15/32–½	23/32–¾	1 ½	15/32–½	23/32–¾	1 ½
#9 x 1½	SD9112SS	1	105	—	—	93	—	—
#9 x 2½	SD9212SS		118	133	130	99	94	109

1. Allowable loads are shown at the wood load duration factor of C_D = 1.00. Loads may be increased for load duration per the building code up to a C_D = 1.60.
2. The 15/32" and 23/32" side members must be plywood or OSB with minimum equivalent specific gravities of 0.50 for DFL and SP design values, and 0.42 for SPF and HF design values. See NDS, Table 12.3.3B for specific WSP grades and associated equivalent specific gravities.
3. Loads are based on connections with main members of DFL/SP or SPF/HF and side members as shown and described in table note 2. Screws shall be installed normal to the surface of the wood members.
4. For minimum fastener spacing requirements for both side and main members, see the Spacing Requirements Figure and Table on p. 69.

SD Connector SS Screw — Allowable Withdrawal Loads

Size x Length (in.)	Model No.	Thread Length (in.)	Head Diameter (in.)	Reference Allowable Withdrawal Loads, W (lb./in.)	
				DFL/SP Main Member	SPF/HF Main Member
#9 x 1½	SD9112SS	1	0.37	173	122
#9 x 2½	SD9212SS				

1. The tabulated reference allowable withdrawal value, W, is in pounds per inch of the thread penetration into the side grain of the main member.
2. Tabulated reference allowable withdrawal value, W, must be multiplied by all applicable adjustment factors from the NDS as referenced in the IBC or IRC.
3. Thread penetration length is that portion held in the main member, including the screw tip.
4. For connections with 15/32" thick plywood or OSB side members, allowable withdrawal design values, W, must be limited by the head pull-through design value of 130 lb.

C-F-2023TECHSUP © 2023 Simpson Strong-Tie Company Inc.

Strong-Drive®
SD CONNECTOR SS Screw (cont.)

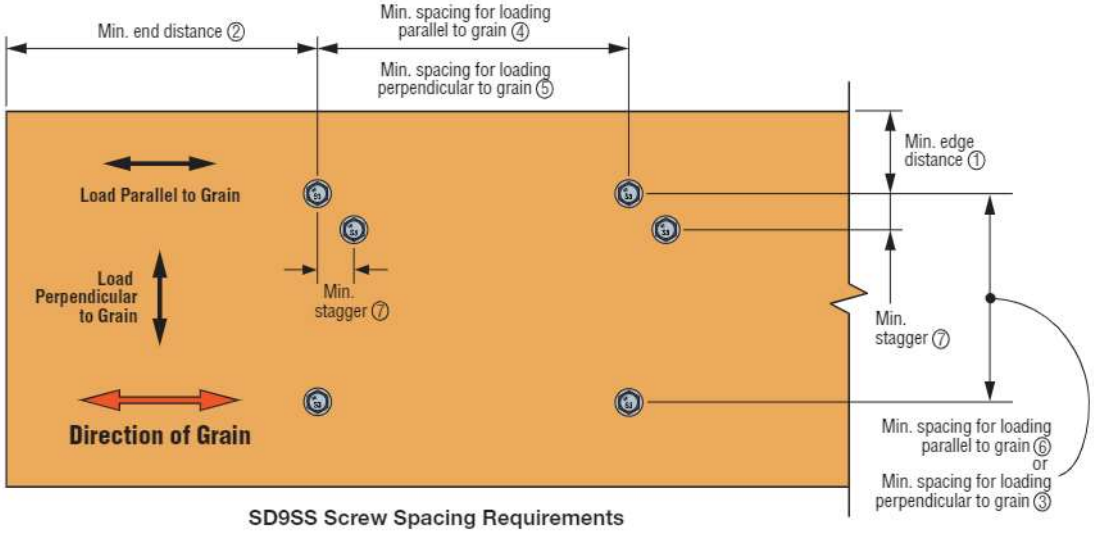

SD9SS Screw Spacing Requirements

SD Connector SS Screw Spacing Requirements

Condition	Direction of Load to Grain	ID	Minimum Distance or Spacing (in.)	
			Main Member	Wood Side Member
Edge Distance	Perpendicular	①	1	1
	Parallel	①	½	½
End Distance	Perpendicular	②	2	2 7/16
	Parallel	②	2	2 7/16
Spacing Between Fasteners in a Row	Perpendicular	③	2	2 7/16
	Parallel	④	2	2 7/16
Spacing Between Rows of Fasteners	Perpendicular	⑤	½	13/16
	Parallel	⑥	½	13/16
Spacing Between Staggered Rows	Perpendicular or Parallel	⑦	½	½

1. For SD9SS screws subject to axial loading only, use the following minimum dimensions: end distance = 1¾", edge distance = ¾", spacing parallel to grain = 1¼", spacing perpendicular to grain = ¾".

C-F-2023TECHSUP © 2023 Simpson Strong-Tie Company Inc.

Strong-Drive®
SDS HEAVY-DUTY CONNECTOR Screw

Heavy-Duty Simpson Strong-Tie Connectors, Indoor/Outdoor Projects

Codes/Standards: ICC-ES ESR-2236 (including City of LA Supplement), State of Florida FL9589

For more information, see p. 68, C-F-2023 *Fastening Systems* catalog

SDS Heavy-Duty Connector Screw — Allowable Shear Loads — Douglas Fir–Larch and Southern Pine Lumber

Length (in.)	Model No.	Reference DFL/SP Allowable Shear Loads (lb.)												
		Wood Side Plate Thickness (in.)												
		½	⅝	¾	1	1⅛	1¼	1½	1¾	2½	3	3½	4	4½
2	SDS25200	145	—	—	—	—	—	—	—	—	—	—	—	—
2½	SDS25212	165	165	170	165	—	—	190[1]	—	—	—	—	—	—
3	SDS25300	165	165	170	185	195	205	280[1]	—	—	—	—	—	—
3½	SDS25312	165	165	170	185	195	205	340[1]	340[1]	—	—	—	—	—
4½	SDS25412	165	165	170	185	195	205	350[1]	340[1]	230	200	—	—	—
5	SDS25500	165	165	170	185	195	205	350[1]	340[1]	230	230	200	—	—
6	SDS25600	165	165	170	185	195	205	350[1]	340[1]	340[1]	340[1]	340[1]	230	200
8	SDS25800	165	165	170	185	195	205	350[1]	340[1]	340[1]	340[1]	340[1]	230	230

See footnotes below.

SDS Heavy-Duty Connector Screw — Allowable Shear Loads — Spruce-Pine-Fir and Hem-Fir

Length (in.)	Model No.	Reference SPF/HF Allowable Shear Loads (lb.)												
		Wood Side Plate Thickness (in.)												
		½	⅝	¾	1	1⅛	1¼	1½	1¾	2½	3	3½	4	4½
2	SDS25200	105	—	—	—	—	—	—	—	—	—	—	—	—
2½	SDS25212	130	135	130	120	—	—	135[1]	—	—	—	—	—	—
3	SDS25300	130	140	140	150	150	145	200[1]	—	—	—	—	—	—
3½	SDS25312	130	140	140	150	155	165	245[1]	245[1]	—	—	—	—	—
4½	SDS25412	130	140	140	150	155	165	250[1]	245[1]	190	160	—	—	—
5	SDS25500	130	140	140	150	155	165	250[1]	245[1]	190	190	160	—	—
6	SDS25600	130	140	140	150	155	165	250[1]	245[1]	245[1]	245[1]	245[1]	190	160
8	SDS25800	130	140	140	150	155	165	250[1]	245[1]	245[1]	245[1]	245[1]	195	195

1. Noted loads are based on testing per ICC-ES AC233 and assume a minimum main member thickness of the screw length minus the side member thickness. All other allowable loads are based on the NDS and a minimum penetration of 6D = 1.5" into the main member.
2. Values are valid for a connection involving only two members. Where the side and main members have different specific gravities, the lower specific gravity shall be used.
3. Allowable loads are also applicable to structural composite lumber (e.g., LVL, PSL, and LSL) having an equivalent specific gravity of 0.50 or greater.
4. Allowable loads are shown at the wood load duration factor of C_D = 1.00. Loads may be increased for load duration by the building code up to a C_D = 1.60. The designer shall apply all adjustment factors required per NDS.
5. Loads are based on perpendicular installation into the side grain of the wood members.
6. Loads apply to corresponding stainless-steel models.
7. For in-service moisture greater than 19%, use C_M = 0.7.

C-F-2023TECHSUP © 2023 Simpson Strong-Tie Company Inc.

Strong-Drive®
SDS HEAVY-DUTY CONNECTOR Screw (cont.)

SDS Heavy-Duty Connector Screw — Reference Allowable Withdrawal Loads — Douglas Fir–Larch, Southern Pine, Spruce-Pine-Fir and Hem-Fir Lumber

Model No.	Length (in.)	Thread Length (in.)	Reference Allowable Withdrawal Loads, W (lb./in.)		Max. Reference Allowable Withdrawal Loads, W_{max} (lb.)	
			DFL and SP Main Member	HF and SPF Main Member	DFL and SP Main Member	HF and SPF Main Member
SDS25112	1.5	1	172	121	170	120
SDS25200	2	1.25	172	121	215	150
SDS25212	2.5	1.5	172	121	255	180
SDS25300	3	2	172	121	345	240
SDS25312	3.5	2.25	172	121	345	240
SDS25412	4.5	2.75	172	121	345	240
SDS25500	5	2.75	172	121	345	240
SDS25600	6	3.25	172	121	345	240
SDS25800	8	3.25	172	121	345	240

1. The tabulated reference withdrawal design value, W, is in pounds per inch of the thread penetration into the side grain of the main member.
2. The tabulated reference withdrawal design value, W_{max}, is in pounds where the entire thread length must penetrate into the side grain of the main member.
3. The tabulated reference withdrawal design values, W and W_{max}, are shown at a $C_D = 1.6$. For end-grain withdrawal, 0.65. Tabulated values must be multiplied by all applicable adjustment factors from the NDS as referenced in the IBC or IRC.
4. Embedded thread length is that portion held in the main member including the screw tip.
5. Values are based on the lesser of withdrawal from the main member or pull-through of a 1½" side member.
6. For in-service moisture content greater than 19%, use $C_M = 0.7$.

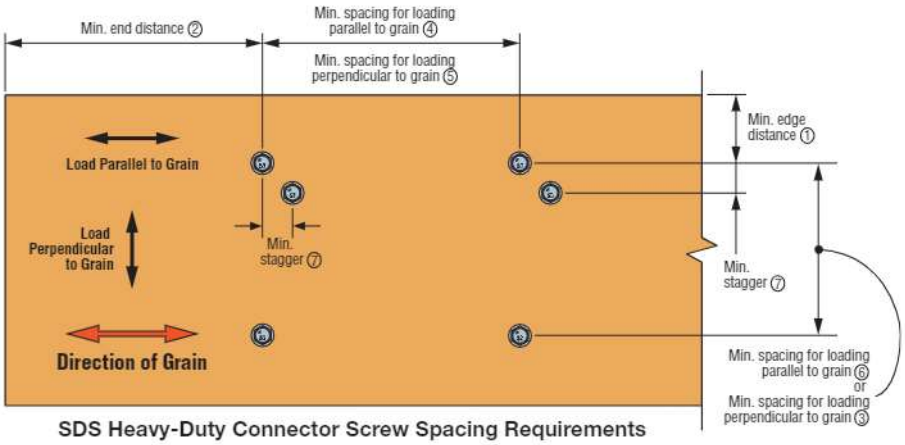

SDS Heavy-Duty Connector Screw Spacing Requirements

SDS Heavy-Duty Connector Screw Spacing Requirements

Condition	Direction of Load to Grain	ID	Minimum Distance or Spacing (in.)
Edge Distance	Perpendicular	①	1½
	Parallel	①	1
End Distance	Perpendicular	②	4
	Parallel	②	3
Spacing Between Fasteners in a Row	Perpendicular	③	3
	Parallel	④	3
Spacing Between Rows of Fasteners	Perpendicular	⑤	3
	Parallel	⑥	3
Spacing Between Staggered Rows	Perpendicular or Parallel	⑦	1½

1. For axial loading only, use the following minimum dimensions: end distance = 3¼", edge distance = 1⅜", spacing parallel to grain = 2¼", spacing perpendicular to grain = 1⅜".

C-F-2023TECHSUP © 2023 Simpson Strong-Tie Company Inc.

Strong-Drive®
SDWS **TIMBER** Screw (Exterior Grade) in Ledger-to-Stud Applications

Strong-Drive SDWS Timber screws may be used to attach a ledger to the narrow face of nominal 2x lumber studs according to the following table.

For more information, see p. 59, C-F-2023 *Fastening Systems* catalog

SDWS Timber Screw (Exterior Grade) — Allowable Shear Loads for Ledger to Studs

Length (in.)	Model No.	Ledger Nominal Size (in.)	Number of Screws per Stud	Reference Allowable Shear Loads (lb.)		
				SP	DFL	SPF/HF
4	SDWS22400DB	2x6	2	785	630	565
		2x8	3	1,060	890	855
		2x10	4	—	1,040	1,040

1. Allowable loads shall be limited to parallel-to-grain loaded solid sawn main members (minimum 2" nominal). Wood side members shall be loaded perpendicular to grain.
2. Allowable loads are based on DFL, SPF/HF, and SP wood members having a minimum specific gravity of 0.50, 0.42, and 0.55, respectively. Where the side and main members have different specific gravities, the lower values shall be used.
3. Allowable loads are shown at the wood load duration factor of C_D = 1.00. Loads may be increased for load duration as permitted by the building code up to a C_D = 1.60. All adjustment factors shall be applied per NDS-2018. For in-service moisture content greater than 19%, use C_M = 0.70.
4. Fasteners shall be centered in the stud and spaced as shown in the figure. The stud minimum end distance is 6" when loaded toward the end and 2½" when loaded away from the end. The ledger end distance is 6" for full values. For ledger end distances between 2" and 6" use 50% of the table loads. For end distances between 2" and 4", predrill using a 5/32" bit for SDWS.
5. Screws may be installed with an intermediate layer of wood structural panel between the side and main member provided the wood structural panel is fastened to the main member per code and the minimum screw penetration of 2½" into the main member (excluding the wood structural panel) is met. Longer lengths of the screw series may be used.
6. For LRFD values, the reference connection design values shall be adjusted in accordance with the NDS-2018, section 11.3.
7. For 2x10 SP ledgers, use the number of screws and allowable loads of the 2x8 SP ledger.
8. For 2x8 ledgers with two screws, use 2x6 values. For 2x10 ledgers with three screws, use 2x8 values. Spacings and edge distances shown in the figure are minimum dimensions.
9. For loads in the opposite direction from that shown in the figure, use the table values multiplied by: 0.50 for two-screw connections, 0.67 for three-screw connections, and 0.75 for four-screw connections.
10. Visit **strongtie.com/drawings** and search for SD1-L for additional ledger fastening detail sheets and load tables in DWG, PDF or DXF format.
11. Fastener loads are based on the lesser of single fastener ICC-ES AC233 testing with a safety factor of 5.0 or ICC-ES AC13 assembly testing with a factor of safety of 5.0.

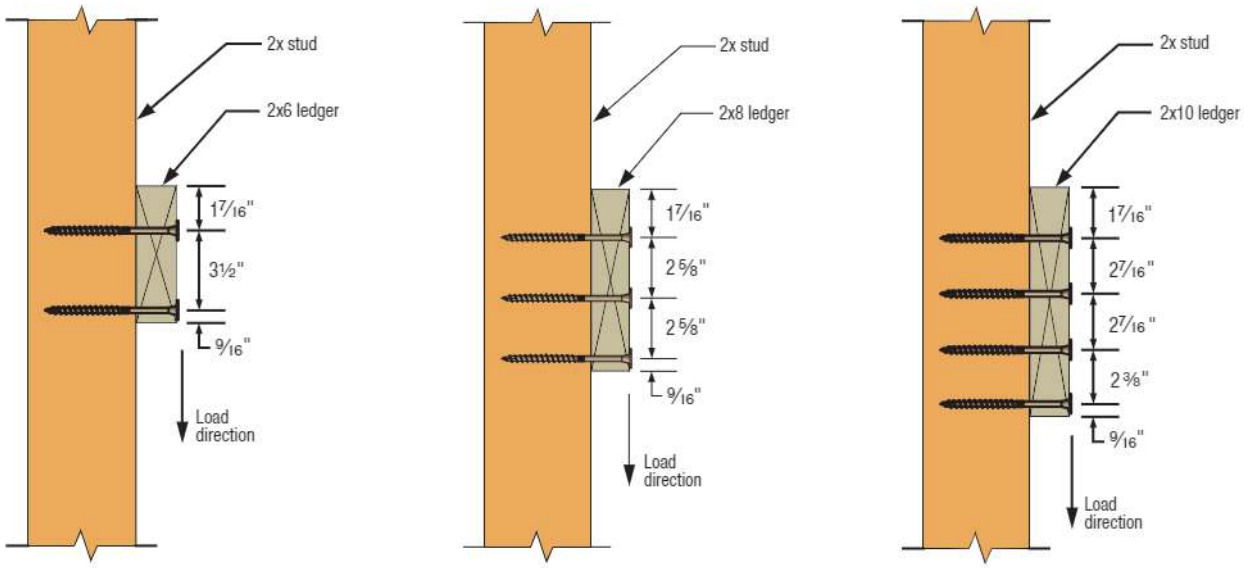

C-F-2023TECHSUP © 2023 Simpson Strong-Tie Company Inc.

Strong-Drive®
SDWS **TIMBER** Screw (Exterior Grade) with Gypsum Board Interlayer(s)

SDWS Timber Screw (Exterior Grade) — Allowable Shear Loads for Ledger Attachment to Studs with One or Two Layers of ⅝" Gypsum Board

Length (in.)	Model No.	Ledger Size (in.)	Number of Screws per Stud	Reference Allowable Shear Loads (lb.)		
				SP	DFL	SPF/HF
6	SDWS22600DB	2x6	2	510	410	365
		2x8	3	690	580	555
		2x10	4	—	675	675

1. Allowable loads shall be limited to parallel-to-grain loaded solid sawn main members (minimum 2" nominal). Wood side members shall be loaded perpendicular to grain.
2. Allowable loads are based on DFL, SPF/HF, and SP wood members having a minimum specific gravity of 0.50, 0.42, and 0.55, respectively. Where the side and main members have different specific gravities, the lower values shall be used.
3. Allowable loads are shown at the wood load duration factor of C_D = 1.00. Loads may be increased for load duration as permitted by the building code up to a C_D = 1.60. All adjustment factors shall be applied per NDS-2018. For in-service moisture content greater than 19%, use C_M = 0.70.
4. Fasteners shall be centered in the stud and spaced as shown in the figure. The ledger minimum end distance is 6". The stud minimum end distance is 6" when the load is toward the end and 2½" when the load is away from the end.
5. Screws may be installed with an interlayer of wood structural panel (WSP) between the framing and the gypsum panel(s). When a WSP is present, it shall be a maximum of ½" thick, adjacent to the framing and fastened directly to the framing per code. Minimum screw penetration into the framing of 2½" shall be required; longer screw lengths shall be used to achieve the required penetration.
6. For LRFD values, the reference connection design values shall be adjusted in accordance with NDS-2018, section 11.3.
7. For 2x10 SP ledgers, use the number of screws and allowable loads of the 2x8 SP ledger.
8. For 2x8 ledgers with two screws, use 2x6 values. For 2x10 ledgers with three screws, use 2x8 values. Spacings and edge distances shown in the figure are minimum dimensions.
9. For loads in the opposite direction from that shown in the figure, use the table values multiplied by: 0.50 for two-screw connections, 0.67 for three-screw connections and 0.75 for four-screw connections.
10. Gypsum board must be attached as required per the building code.
11. For ledger end distances between 2" and 6", use 50% of load and predrill with 5/32" drill bit.
12. Visit **strongtie.com/drawings** and search for SD1-L for additional ledger fastening detail sheets and load tables in DWG, PDF or DXF format.
13. Fastener loads are based on the lesser of single fastener ICC-ES AC233 testing with a safety factor of 5.0 or ICC-ES AC13 assembly testing with a factor of safety of 5.0.

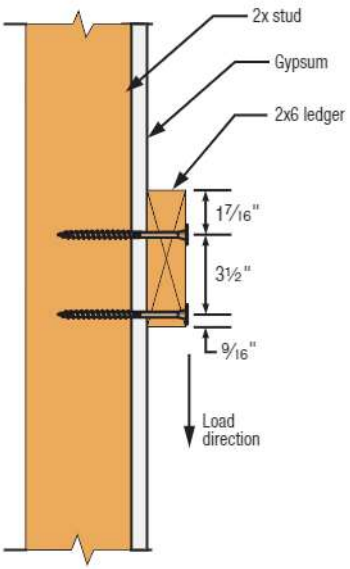

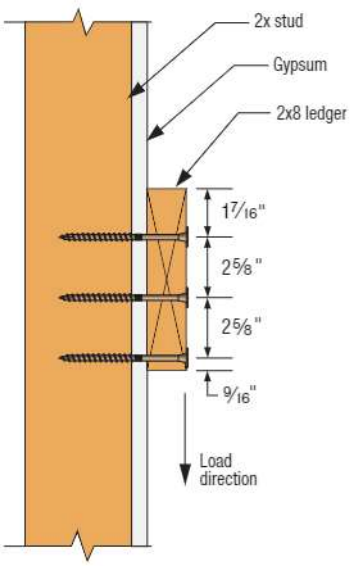

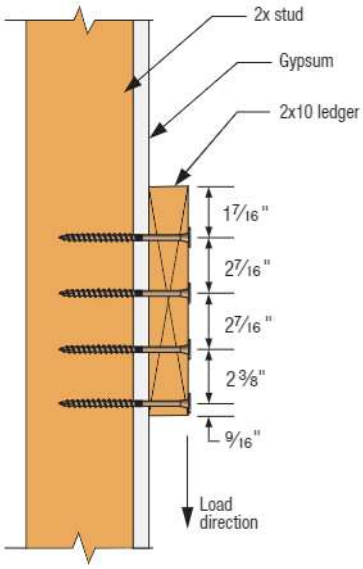

Note: Minimum stud dimension is nominal 2 x 6.

Notes to Installer Regarding the Attachment of Ledgers to Studs:

The screws must be installed into the middle of the stud with a tolerance of 3/16" either side of center. Various methods can be used to ensure proper placement of the screws in the stud including snapping a chalk line, using a stud finder or prerocking (attaching only a strip of gypsum at the ledger location until the ledger is fastened to the studs). If proper screw placement into the stud cannot be achieved in the field, blocking should be installed between studs to receive and support the ledger screws.

C-F-2023TECHSUP © 2023 Simpson Strong-Tie Company Inc.

Strong-Drive®
SDWS **TIMBER** Screw (Exterior Grade) with Gypsum Board Interlayer(s) (cont.)

SDWS Timber Screw (Exterior Grade) — 2021 and 2018 IRC Compliant Spacing for a Sawn Lumber Ledger to Rim Board with One or Two Layers of ⅝" Gypsum Board

Loading Condition	Nominal Ledger Thickness (in.)	Model No.	Rim Board Material and Minimum Size	Maximum Deck Joist Span						
				Up to 6 ft.	Up to 8 ft.	Up to 10 ft.	Up to 12 ft.	Up to 14 ft.	Up to 16 ft.	Up to 18 ft.
				Maximum On-Center Spacing of Fasteners (in.)						
40 psf Live 10 psf Dead	2x	For one layer of gypsum board use: SDWS22400DB For two layers of gypsum board use: SDWS22500DB	1" OSB; 1" LVL	13	10	8	6	6	5	4
			1⅛" OSB; 1 5/16" LVL; 1¼" LSL	15	11	9	8	7	6	5
			2x SP, DFL; 2x SPF, HF	20	15	12	10	9	8	7
100 psf Live 10 psf Dead	2x	For one layer of gypsum board use: SDWS22400DB For two layers of gypsum board use: SDWS22500DB	1" OSB; 1" LVL	6	4	4	—	—	—	—
			1⅛" OSB; 1 5/16" LVL; 1¼" LSL	8	6	5	4	—	—	—
			2x SP, DFL; 2x SPF, HF	9	7	5	5	4	—	—
100 psf Live 10 psf Dead	(2) 2x	For one layer of gypsum board use: SDWS22600DB	1" OSB; 1" LVL	7	5	4	—	—	—	—
			1⅛" OSB; 1 5/16" LVL; 1¼" LSL	7	5	4	—	—	—	—
			2x SP, DFL; 2x SPF, HF	7	5	4	—	—	—	—
60 psf Live 10 psf Dead	2x	For one layer of gypsum board use: SDWS22400DB For two layers of gypsum board use: SDWS22500DB	1" OSB; 1" LVL	9	7	6	5	4	—	—
			1⅛" OSB; 1 5/16" LVL; 1¼" LSL	11	8	7	5	5	4	4
			2x SP, DFL; 2x SPF, HF	14	11	9	7	6	5	5
40 psf Live 10 psf Dead	(2) 2x	For one layer of gypsum board use: SDWS22600DB	1" OSB; 1" LVL	14	11	9	7	6	5	5
			1⅛" OSB; 1 5/16" LVL; 1¼" LSL	15	11	9	8	7	6	5
			2x SP, DFL; 2x SPF, HF	15	11	9	8	7	6	5
60 psf Live 10 psf Dead	(2) 2x	For one layer of gypsum board use: SDWS22600DB	1" OSB; 1" LVL	10	8	6	5	5	4	—
			1⅛" OSB; 1 5/16" LVL; 1¼" LSL	11	8	6	5	5	4	4
			2x SP, DFL; 2x SPF, HF	11	8	6	5	5	4	4

1. Sawn rim board shall be spruce-pine-fir, hem-fir, Douglas fir–larch, or southern pine species. Ledger shall be hem-fir, Douglas fir–larch, or southern pine species.
2. Fastener spacings are based on the lesser of single fastener ICC-ES AC233 testing of the Strong-Drive SDWS screw with a safety factor of 5.0 or ledger assembly testing based on ICC-ES AC13 with a factor of safety of 5.0. Spacing does not include NDS wet service factor adjustment.
3. Multiple ledger plies shall be fastened together per code independent of the SDWS screws.
4. SDWS screw spacing values are equivalent to 2021/2018 IRC Table R507.9.1.3(1) and 2012/2015 IRC Table R507.2. The table also provides SDWS screw spacing for a wider range of materials commonly used for rim boards, and an alternate loading condition as required by some jurisdictions.
5. Screws shall be placed 1.5" to 2" from the top and bottom of the ledger or rim board with 3" minimum and 6" maximum vertical distance between fasteners with horizontal on-center spacing per the table. End screws shall be located 6" from the end and at 1.5" to 2" from the bottom of the ledger. For screws located at least 2" but less than 6" from the end, use 50% of the load per screw and 50% of the table spacing between the end screw and the adjacent screw, and for screws located between 2" and 4" from the end, predrill using a 5/32" drill bit.
6. The design installation permits a wood structural panel (WSP) interlayer in addition to one or two layers of gypsum board. If present, the WSP shall be a maximum of ½" thick, adjacent to the framing and fastened directly to the framing per the code.
7. Gypsum board must be attached as required per the building code.
8. Visit **strongtie.com/drawings** and search for SD1-L for additional ledger fastening detail sheets and load tables in DWG, PDF or DXF format.

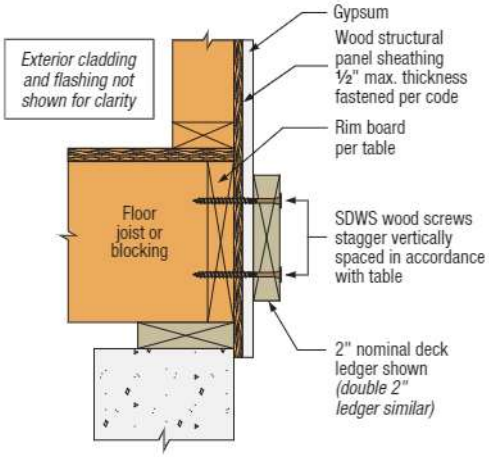

Ledger-to-Rim Board Assembly
(wood-framed lower floor acceptable, concrete wall shown for illustration purposes)

C-F-2023TECHSUP © 2023 Simpson Strong-Tie Company Inc.

Strong-Drive®
SDWH **TIMBER-HEX** Screw in Ledger-to-Stud Applications

Strong-Drive SDWH Timber-Hex screws may be used to attach a ledger to the narrow face of nominal 2x lumber studs according to the following table.

For more information, see p. 61, C-F-2023 *Fastening Systems* catalog

SDWH Timber-Hex Screw — Allowable Shear Loads for Ledger to Studs

Length (in.)	Model No.	Nominal Ledger Size (in.)	Number of Screws per Stud	Reference Allowable Shear Loads (lb.)		
				SP	DFL	SPF/HF
4	SDWH19400DB	2x6	2	630	630	540
		2x8	3	630	815	815
		2x10	4	—	1,170	975

1. Allowable loads shall be limited to parallel-to-grain loaded solid sawn main members (minimum 2" nominal). Wood side members shall be loaded perpendicular to grain.
2. Allowable loads are based on DFL, SPF/HF, and SP wood members having a minimum specific gravity of 0.50, 0.42, and 0.55, respectively. Where the side and main members have different specific gravities, the lower values shall be used.
3. Allowable loads are shown at the wood load duration factor of $C_D = 1.00$. Loads may be increased for load duration as permitted by the building code up to a $C_D = 1.60$. For in-service moisture content greater than 19%, use $C_M = 0.70$.
4. Fasteners shall be centered in the stud and spaced as shown in the figure. The stud minimum end distance is 6" when loaded toward the end and 2½" when loaded away from the end. The ledger end distance is 6" for full values. For ledger end distanced between 2" and 6" use 50% of the table loads. For end distances between 2" and 4", predrill using a ⅛" bit for the SDWH.
5. Screws shall be placed 1.5" to 2" from the top and bottom of the ledger or rim board with 3" minimum and 6" maximum vertical distance between fasteners with horizontal on-center spacing per the table. End screws shall be located 6" from the end and at 1.5" to 2" from the bottom of the ledger. For screws located at least 2" but less than 6" from the end, use 50% of the load per screw and 50% of the table spacing between the end screw and the adjacent screw, and for screws located between 2" and 4" from the end, predrill using a ⅛" drill bit.
6. For LRFD values, the reference connection design values shall be adjusted in accordance with the NDS-2018, section 11.3.
7. For 2x10 SP ledgers, use the number of screws and allowable loads of the 2x8 SP ledger.
8. For 2x8 ledgers with two screws, use 2x6 values. For 2x10 ledgers with three screws, use 2x8 values. Spacings and edge distances shown in the figure are minimum dimensions.
9. For loads in the opposite direction from that shown in the figure, use the table values multiplied by: 0.50 for two-screw connections, 0.67 for three-screw connections, and 0.75 for four-screw connections.
10. Visit **strongtie.com/drawings** and search for SD1-L for additional ledger fastening detail sheets and load tables in DWG, PDF or DXF format.
11. Fastener loads are based on the lesser of single fastener ICC-ES AC233 testing with a safety factor of 5.0 or ICC-ES AC13 assembly testing with a factor of safety of 5.0.

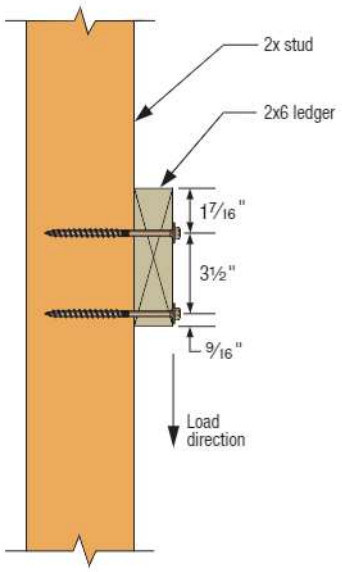

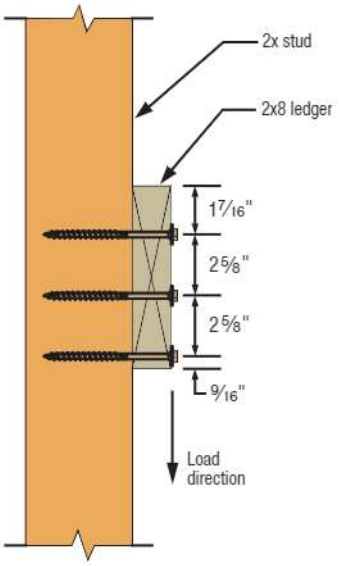

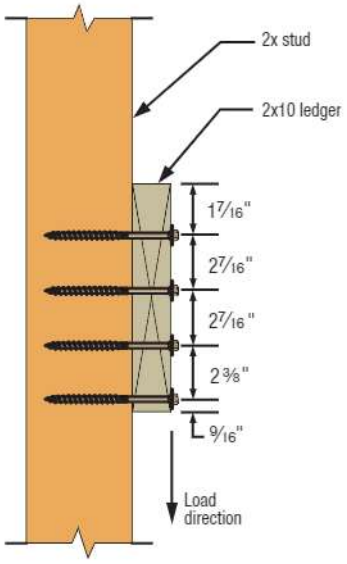

C-F-2023TECHSUP © 2023 Simpson Strong-Tie Company Inc.

Strong-Drive®
SDWH **TIMBER-HEX** Screw with Gypsum Board Interlayer(s)

SDWH Timber-Hex Screw — Allowable Shear Loads for Ledger Attachment to Studs with One or Two Layers of ⅝" Gypsum Board

Length (in.)	Model No.	Nominal Ledger Size (in.)	Number of Screws per Stud	Reference Allowable Shear Loads (lb.)		
				SP	DFL	SPF/HF
6	SDWH19600DB	2x6	2	410	410	350
		2x8	3	410	530	530
		2x10	4	—	760	635

1. Allowable loads shall be limited to parallel-to-grain loaded solid sawn main members (minimum 2" nominal). Wood side members shall be loaded perpendicular to grain.
2. Allowable loads are based on DFL, SPF/HF, and SP wood members having a minimum specific gravity of 0.50, 0.42, and 0.55, respectively. Where the side and main members have different specific gravities, the lower values shall be used.
3. Allowable loads are shown at the wood load duration factor of C_D = 1.00. Loads may be increased for load duration as permitted by the building code up to a C_D = 1.60. All adjustment factors shall be applied per NDS-2018. For in-service moisture content greater than 19%, use C_M = 0.70.
4. Fasteners shall be centered in the stud and spaced as shown in the figure. The ledger minimum end distance is 6". The stud minimum end distance is 6" when the load is toward the end and 2½" when the load is away from the end. For ledger end distances between 2" and 6", use half of table loads and predrill with ⅛" drill bit.
5. Screws may be installed with an interlayer of wood structural panel (WSP) between the framing and the gypsum panel(s). When a WSP is present, it shall be a maximum of ½" thick, adjacent to the framing and fastened directly to the framing per code. Minimum screw penetration into the framing of 2½" shall be required; longer screw lengths shall be used to achieve the required penetration.
6. For LRFD values, the reference connection design values shall be adjusted in accordance with the NDS-2018, section 11.3.
7. For 2x10 SP ledgers, use the number of screws and allowable loads of the 2x8 SP ledger.
8. For 2x8 ledgers with two screws, use 2x6 values. For 2x10 ledgers with three screws, use 2x8 values. Spacings and edge distances shown in the figure are minimum dimensions.
9. For loads in the opposite direction from that shown in the figure, use the table values multiplied by: 0.50 for two-screw connections, 0.67 for three-screw connections, and 0.75 for four-screw connections.
10. Gypsum board must be attached as required per the building code.
11. Visit **strongtie.com/drawings** and search for SD1-L for additional ledger fastening detail sheets and load tables in DWG, PDF or DXF format.
12. Fastener loads are based on the lesser of single fastener ICC-ES AC233 testing with a safety factor of 5.0 or ICC-ES AC13 assembly testing with a factor of safety of 5.0.

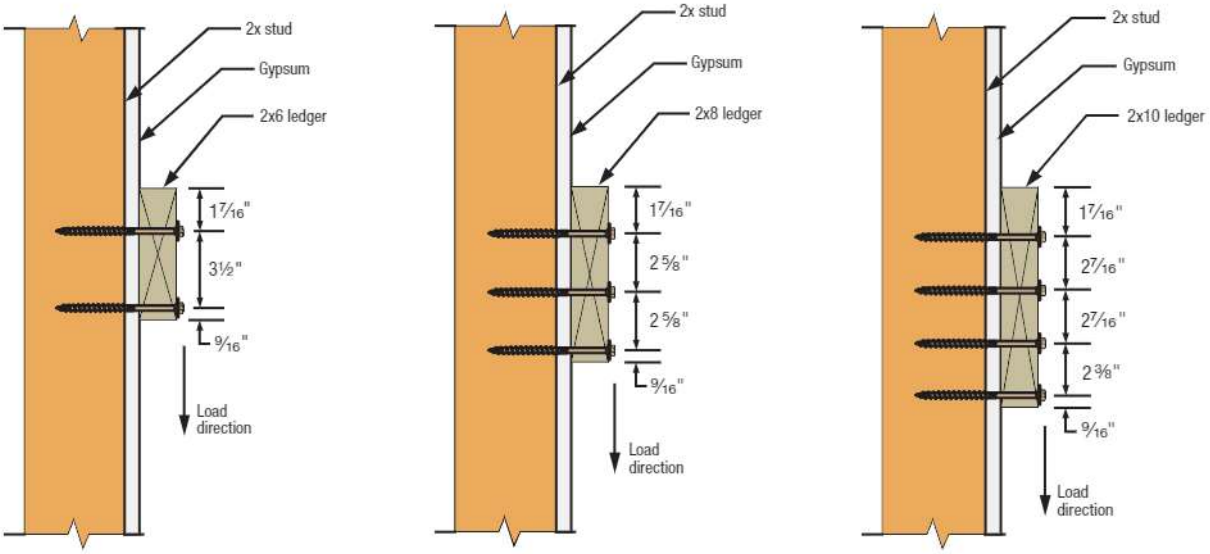

Note: Minimum stud dimension is nominal 2 x 6.

Notes to Installer Regarding the Attachment of Ledgers to Studs:

The screws must be installed into the middle of the stud with a tolerance of 3/16" either side of center. Various methods can be used to ensure proper placement of the screws in the stud including snapping a chalk line, using a stud finder, or prerocking (attaching only a strip of gypsum at the ledger location until the ledger is fastened to the studs). If proper screw placement into the stud cannot be achieved in the field, blocking should be installed between studs to receive and support the ledger screws.

C-F-2023TECHSUP © 2023 Simpson Strong-Tie Company Inc.

Strong-Drive®
SDWH **TIMBER-HEX** Screw with Gypsum Board Interlayer(s) (cont.)

SDWH Timber-Hex Screw — 2021 and 2018 IRC Compliant Spacing for a Sawn Lumber Ledger to Rim Board with One or Two Layers of ⅝" Gypsum Board

Loading Condition	Nominal Ledger Thickness (in.)	Model No.	Rim Board Material and Minimum Size	Maximum Deck Joist Span						
				Up to 6 ft.	Up to 8 ft.	Up to 10 ft.	Up to 12 ft.	Up to 14 ft.	Up to 16 ft.	Up to 18 ft.
				Maximum On-Center Spacing of Fasteners (in.)						
40 psf Live 10 psf Dead	2x	For one layer of gypsum board use: SDWH19400DB For two layers of gypsum board use: SDWH19600DB	1" OSB 1" LVL	12	9	7	6	5	4	4
			1⅛" OSB 1 5/16" LVL 1¼" LSL	17	12	10	8	7	6	6
			2x SP, DFL 2x SPF, HF	14	11	9	7	6	5	5
60 psf Live 10 psf Dead	2x	For one layer of gypsum board use: SDWH19400DB For two layers of gypsum board use: SDWH19600DB	1" OSB 1" LVL	8	6	5	4	4	—	—
			1⅛" OSB 1 5/16" LVL 1¼" LSL	12	9	7	6	5	4	4
			2x SP, DFL 2x SPF, HF	10	8	6	5	4	4	—
100 psf Live 10 psf Dead	2x	For one layer of gypsum board use: SDWH19400DB For two layers of gypsum board use: SDWH19600DB	1" OSB 1" LVL	5	4	—	—	—	—	—
			1⅛" OSB 1 5/16" LV 1¼" LSL	8	6	5	4	—	—	—
			2x SP, DFL 2x SPF, HF	7	5	4	—	—	—	—

1. Solid-sawn rim board shall be spruce-pine-fir, hem-fir, Douglas fir–larch, or southern pine species. Ledger shall be hem-fir, Douglas fir–larch, or southern pine species.
2. Fastener spacings are based on the lesser of single fastener ICC-ES AC233 testing of the SDWH screw with a safety factor of 5.0 or ledger assembly testing based on ICC-ES AC13 with a factor of safety of 5.0. Spacing does NOT include NDS wet service factor adjustment.
3. Multiple ledger plies shall be fastened together per code independent of the SDWH screws.
4. SDWH screw spacing values are equivalent to 2021/2018 IRC Table R507.9.1.3(1) and 2015 IRC Table R507.2. The tables also provide SDWH screw spacing for a wider range of materials commonly used for rim board, and an alternate loading condition as required by some jurisdictions.
5. Rows of screws shall be vertically offset and evenly staggered. Screws shall be placed 1½" to 2" from the top and bottom of the ledger or rim board with 3" minimum and 6" maximum between rows and spaced per the table. End screws shall be located 6" from the end and at 1½" to 2" from the bottom of the ledger. For screws located at least 2" but less than 6" from the end, use 50% of the load per screw and 50% of the table spacing between the end screw and the adjacent screw, and for screws located between 2" and 4" from the end, predrill using a ⅛" drill.
6. The design installation permits a wood structural panel (WSP) interlayer in addition to one or two layers of gypsum board. If present, the WSP shall be a maximum of ½" thick, adjacent to the framing and fastened directly to the framing per the code.
7. Gypsum board must be attached as required per the building code.
8. Visit **strongtie.com/drawings** and search for SD1-L for additional ledger fastening detail sheets and load tables in DWG, PDF or DXF format.

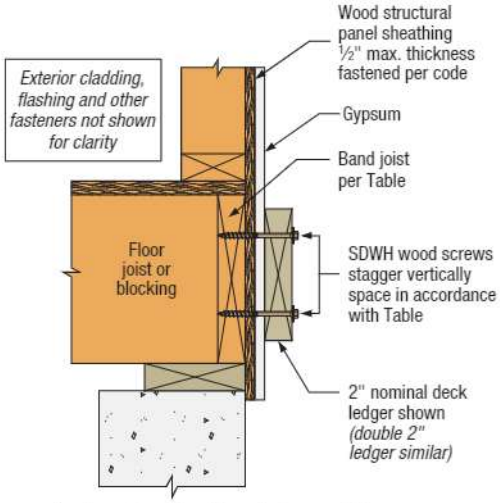

Ledger-to-Rim Board Assembly
(wood-framed lower floor acceptable, concrete wall shown for illustration purposes)

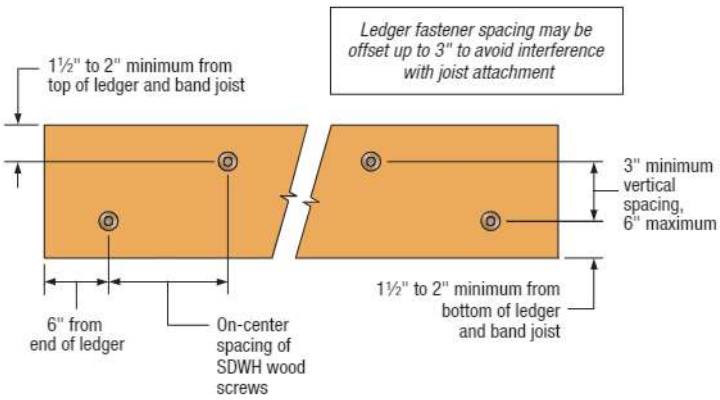

SDWH Screw Spacing Detail

C-F-2023TECHSUP © 2023 Simpson Strong-Tie Company Inc.

Strong-Drive® SDS HEAVY-DUTY CONNECTOR Screw

SDS Heavy-Duty Connector Screw — Allowable Shear Loads for Ledger to Studs

Length (in.)	Model No.	Nominal Ledger Size (in.)	Number of Screws per Stud	Allowable Shear Loads (lb.) (100)	
				DF/SP	SPF/HF
3½	SDS25312	2x8	2	500	380
4½	SDS25412	2x10	3	750	570

1. Allowable loads are limited to parallel-to-grain loaded solid-sawn main members (2" nominal). Wood side members may be loaded parallel or perpendicular to grain (see footnote 4).
2. DFL/SP allowable loads are based on wood members having a minimum specific gravity of 0.50, and SPF/HF allowable loads are based on wood members having a minimum specific gravity of 0.42. Where the side and main members have different specific gravities, the lower values shall be used.
3. Allowable loads are shown at the wood load duration factor of C_D = 1.00. Loads may be increased for load duration by the building code up to a C_D = 1.60.
4. Minimum spacing of fasteners is 3" o.c., minimum end distance is 3" for all parallel-to-grain loaded members, or 4" for all perpendicular-to-grain loaded members, and minimum edge distance is ¾" for all parallel-to-grain loaded members, or 1½" for perpendicular-to-grain loaded side members.
5. Screws may be installed with a maximum ½" thick intermediate layer of wood structural panel between the side and main member provided the wood structural panel is fastened to the main member per code and the minimum penetration of the screw into the main member (excluding the wood structural panel) is met.
6. Visit **strongtie.com/drawings** and search for SD1-L for additional ledger fastening detail sheets and load tables in DWG, PDF or DXF format.
7. Fastener loads are based on the lesser of single fastener ICC-ES AC233 testing with a safety factor of 5.0 or ICC-ES AC13 assembly testing with a factor of safety of 5.0.

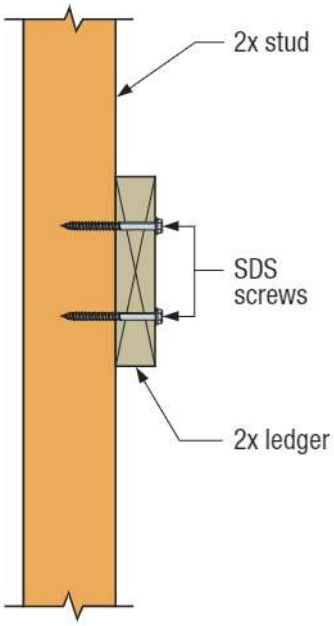

Ledger-to-Stud Assembly

C-F-2023TECHSUP © 2023 Simpson Strong-Tie Company Inc.

Strong-Drive®
SDWS **TIMBER** Screw Ledger Attachment for Top-of-Wall Alignment

The 5" Strong-Drive SDWS Timber Screw (Exterior Grade), model SDWS22500DB, has been tested for use in attaching a ledger to minimum 2x4 wall framing when the ledger is flush with the top of the wall plates and installed over: a) one layer of ½" maximum wood structural panel sheathing, b) one or two layers of ⅝" maximum gypsum board, or c) one layer of ⅝" maximum gypsum over one layer of ½" maximum WSP. The allowable loads are the lesser of single-fastener testing (in accordance with ICC-ES AC233) or full-scale testing of the assemblies shown (in accordance with ICC-ES AC13) with a safety factor of 5.0.

SDWS Timber Screw (Exterior Grade) — Allowable Downloads for Ledger to Top-of-Wall over WSP or Gypsum Wall Sheathing

Number of SDWS22500DB Ledger Screws at Each Stud Connection			Min. Ledger Size	Allowable Download at Each Stud Connection[1,2] (lb.)	Allowable Unit Load Based on Stud Spacing[3] (plf)			
Total	Stud	Top Plates			24" O.C. Stud	19.2" O.C. Stud	16" O.C. Stud	12" O.C. Stud
6	2	4	2x8	855	430	535	640	855
7	3	4	2x10	1,430	715	895	1,075	1,430

1. Allowable loads are applicable to DF/SP/SPF stud and top plate species and DF/SP ledger species. For SPF ledger, allowable load per stud is 855 pounds for assembly with six total screws and 1,230 pounds for assembly with seven total screws.
2. Allowable loads are shown at the wood load duration factor of C_D = 1.00. Loads may be increased for load duration as permitted by the building code up to a C_D = 1.60. All adjustment factors shall be applied per the National Design Specification (NDS). For in-service moisture content greater than 19%, use C_M = 0.70.
3. Minimum stud spacing is 12" on center. Allowable unit loads listed based on specified fastening at every stud.
4. Fasteners shall be centered in the stud and wall plates and spaced as shown in the figures below. The minimum distance from a fastener to the end of a ledger is 6" for full values. For connections where fastener to ledger end distances are between 1½" and 6" use 50% of the table loads. For end distances between 1½" and 4", predrill using a 5/32" bit.
5. Design of wall assembly and ledger is the responsibility of the designer. Wall sheathing must be attached to wall framing as required per the building code.

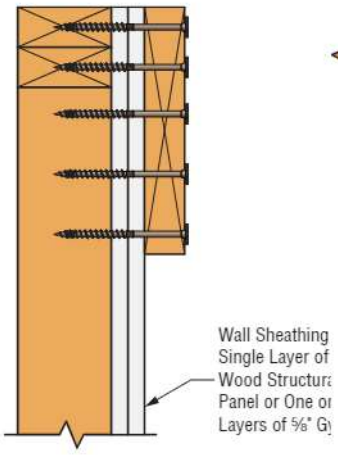

Section View

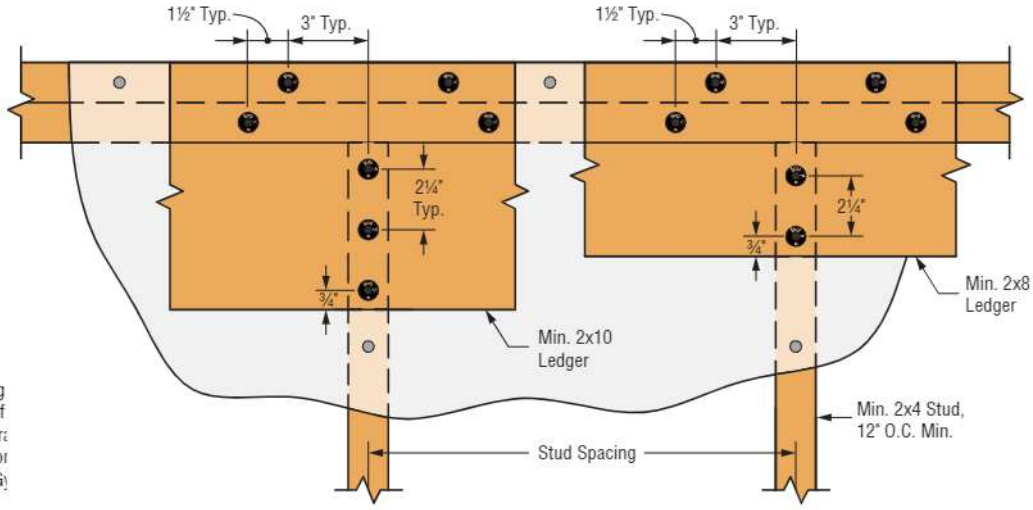

Assembly Detail for Seven Total Screws

Assembly Detail for Six Total Screws

C-F-2023TECHSUP © 2023 Simpson Strong-Tie Company Inc.

Strong-Drive®
SDWS **TIMBER** Screw (Exterior Grade) for Attaching Exterior Foam Insulation

Simpson Strong-Tie Strong-Drive SDWS Timber screws may be used for installing exterior rigid-foam board insulation over wood structural panel (WSP) sheathing. Each fastener installs through furring strips, rigid-foam board and WSP sheathing into the wood wall stud framing. The fasteners do not typically require predrilling. Preservative-treated wood suitable for dry service (AWPA UC1, UC2, UC3A) and untreated wood may be used depending on the protection needs of the construction. The SDWS products with "DB" in the model number have a double-barrier coating that provides corrosion resistance equivalent to hot-dip galvanization, while the products without "DB" in the model number can only be used in conditions with dry service and no wood treatment chemicals. The table on p. 81 provides recommended spacing for fastening vertical furring strips through ½" to 6" of rigid foam insulation board into each wall stud. The SDWS22DB and SDWS22 screws were evaluated as alternate threaded fasteners using ICC-ES AC233 and are the subject of IAPMO UES ER-192. The Strong-Drive SDWS22DB Structural Wood screws were evaluated for corrosion resistance using ICC-ES AC257.

For more information, see p. 59, C-F-2023 *Fastening Systems* catalog

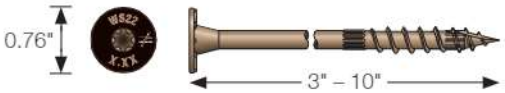

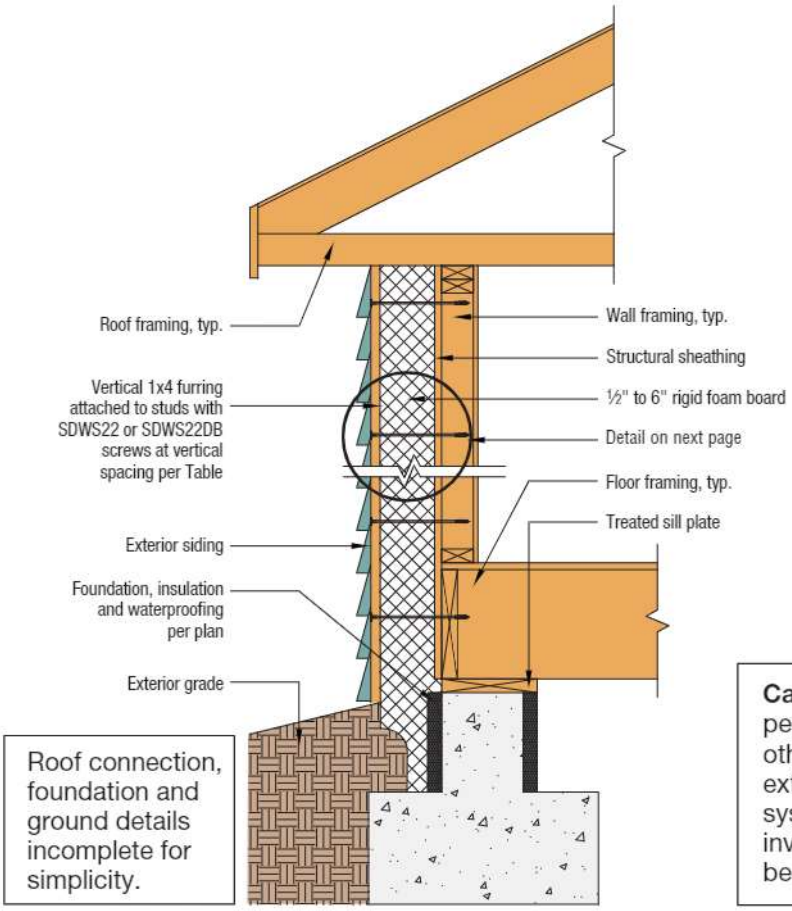

Roof connection, foundation and ground details incomplete for simplicity.

Caution: Fasteners can penetrate wiring, plumbing and other mechanical systems in exterior walls. All mechanical systems in the exterior wall involved with the fastening shall be mapped before driving screws.

Wall Cross-Section

C-F-2023TECHSUP © 2023 Simpson Strong-Tie Company Inc.

Strong-Drive®
SDWS **TIMBER** Screw (Exterior Grade) for Attaching Exterior Foam Insulation (cont.)

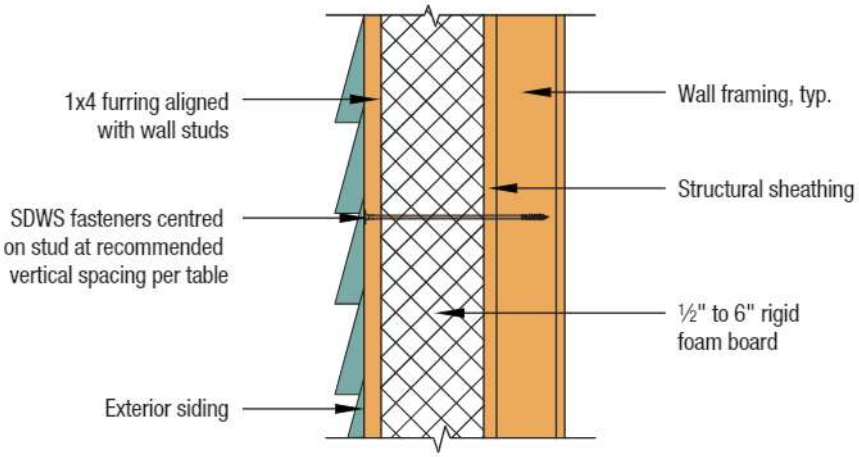

Furring and Rigid Foam Attachment Detail

Recommended Vertical Fastener Spacing

Length (in.)	Model No.	Foam Thickness (in.)	Stud Spacing (in.)	Maximum Allowable Cladding Weight to Be Supported (psf)		
				≤ 20	25	30
4	SDWS22400DB SDWS22400	½	16	24" o.c.	24" o.c.	24" o.c.
			24			
5	SDWS22500DB SDWS22500	1 to 1½	16			
			24			
6	SDWS22600DB SDWS22600	2	16			
			24			
8	SDWS22800DB SDWS22800	4	16			
			24			
10	SDWS221000DB SDWS221000	6	16			
			24		18" o.c.	18" o.c.

1. Caution: Fasteners can penetrate wiring, plumbing and other mechanical systems in exterior walls. All mechanical systems in the exterior wall involved with the fastening shall be mapped before driving screws.
2. Foam sheathing shall have a minimum compressive strength of 15 psi in accordance with ASTM C578 or ASTM C1289.
3. Wood wall framing (studs) shall be a minimum of 2" nominal thickness. Wood framing and furring shall be a minimum spruce-pine-fir species with specific gravity of 0.42 or greater. Table assumes furring strip thickness of ¾" and full thread embedment in the framing member.
4. Wood framing, furring and WSP sheathing shall meet the design requirements in accordance with the applicable building codes. WSP sheathing shall be fastened to the framing as required by the applicable building code.
5. Each fastener is capable of resisting 172 lb. of out-of-plane wind loading (C_D = 1.60) with no further increase allowed.
6. Spacing recommendations are based on a loading that produced 0.015" of assembly movement with 6"-thick rigid foam board insulation.
7. Maximum allowable cladding weight shall be the additive weight of furring, cladding including foam insulation, environmental effects (i.e., ice) and other supported materials.
8. Metal fasteners conduct heat, and it is recommended that exposed screw heads are covered with foam and sealed.
9. Screws shall be installed such that they close gaps between connected components. Furring and sheathing shall provide the required thickness and performance for siding manufacturer installation instructions.

C-F-2023TECHSUP © 2023 Simpson Strong-Tie Company Inc.

Strong-Drive®
SDWC TRUSS Screw

Rafter/Truss-to-Plate and Stud-to-Plate Connections

The SDWC screw is tested in accordance with ICC-ES AC233 (screw) and AC13 (wall assembly and roof-to-wall assembly) for uplift and lateral loads between wall plates and vertical wall framing and between the top plate and the roof rafters or trusses. SDWC15450 is recognized for use in chemically-treated wood as described in the evaluation report.

Codes/Standards: IAPMO UES ER-262 (including City of LA Supplement), State of Florida FL13975

For more information, see p. 103, C-F-2023 *Fastening Systems* catalog

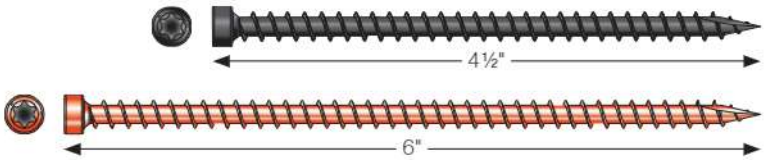

SDWC Truss Screw — Allowable Shear Loads

Length (in.)	Model No.	Thread Length (in.)	Nominal Member Thickness (in.)		Reference Allowable Shear Loads (lb.)					
					Z_{para}[4]			Z_{perp}[5]		
			Side Member	Main Member	SP	DFL	SPF	SP	DFL	SPF
4½	SDWC15450	4¼	2x (Face)	2x (End grain)	—	—	—	225	205	190
6	SDWC15600	5¾	(2)2x (Face)	2x (Edge)	245	240	180	240	240	240
			2x (Face)	2x (End grain)	—	—	—	225	205	190
			(2)2x (Face)	2x (End grain)	—	—	—	225	225	190

1. Allowable loads are shown at the wood load duration factor of C_D = 1.0. Loads may be increased for load duation up to a C_D = 1.6.
2. Tabulated values must be multiplied by all applicable adjustment factors per the NDS.
3. The main and side members shall be sawn lumber or structural composite lumber with a specific gravity or equivalent specific gravity 0.42 to 0.55.
4. Z_{para} — Parallel-to-grain loading in the side member and perpendicular-to-grain loading in the main member.
5. Z_{perp} — Perpendicular-to-grain loading in the side member and perpendicular-to-grain loading in the main member, except for 2x (edge) where main member is loaded parallel to grain.
6. The connection conditions of this table are for specific intended applications. Reference lateral design values for all other shear connections are calculated following the NDS.

SDWC Truss Screw — Allowable Withdrawal and Pull-Through Loads

Length (in.)	Model No.	Thread Length (in.)	Nominal Main Member Thickness (in.)	Reference Allowable Withdrawal Loads (lb./in.)			Reference Allowable Pull-Through Loads (lb./in.)		
				SP	DFL	SPF	SP	DFL	SPF
4½	SDWC15450	4¼	2x (Edge)	250	230	150	—	—	—
			2x (End Grain)	200	140	100	210	180	175
6	SDWC15600	5¾	2x (Face)	210	180	120	255	195	160
			(2) 2x (Face)	220	200	160	240	225	190

1. Allowable loads are shown at the wood load duration factor of C_D = 1.0. Loads may be increased for load duation up to a C_D = 1.6.
2. The tabulated values including end-grain withdrawal, C_{eg}=0.75 must be multiplied by all applicable adjustment factors per the NDS.
3. The reference withdrawal and pull-through values are in pounds per inch of the thread penetration into the main member and a minimum 1½" thick side member, respectively.
4. The end-grain withdrawal factor of 0.65 shall be applied fo the minimum embedment depth of 2.82".

C-F-2023TECHSUP © 2023 Simpson Strong-Tie Company Inc.

Strong-Drive®
SDWC **TRUSS** Screw (cont.)

Continuous Load Path Considerations with the SDWC

Building codes require that structures are designed to create a continuous load path. Forces must be transferred from their point of application to the building elements that are designed to resist them. For example, when uplift forces act on a roof, the roof must be tied to the wall, and the wall must be tied to the foundation or the wall below. The SDWC Truss screws can be used to make all of the connections in the load path from the rafter/truss to top plate, top plate to stud, and stud to bottom plate. As an alternate, structural sheathing designed for uplift can be used for the load path from the wall top plate to the wall bottom plate. If Simpson Strong-Tie metal connectors are used to connect the top plate to the wall framing, they should be on the same side as the SDWC Truss screw that makes the rafter/truss-to-top plate connection. The sheathing and connector fasteners must not interfere with the SDWC Truss screw.

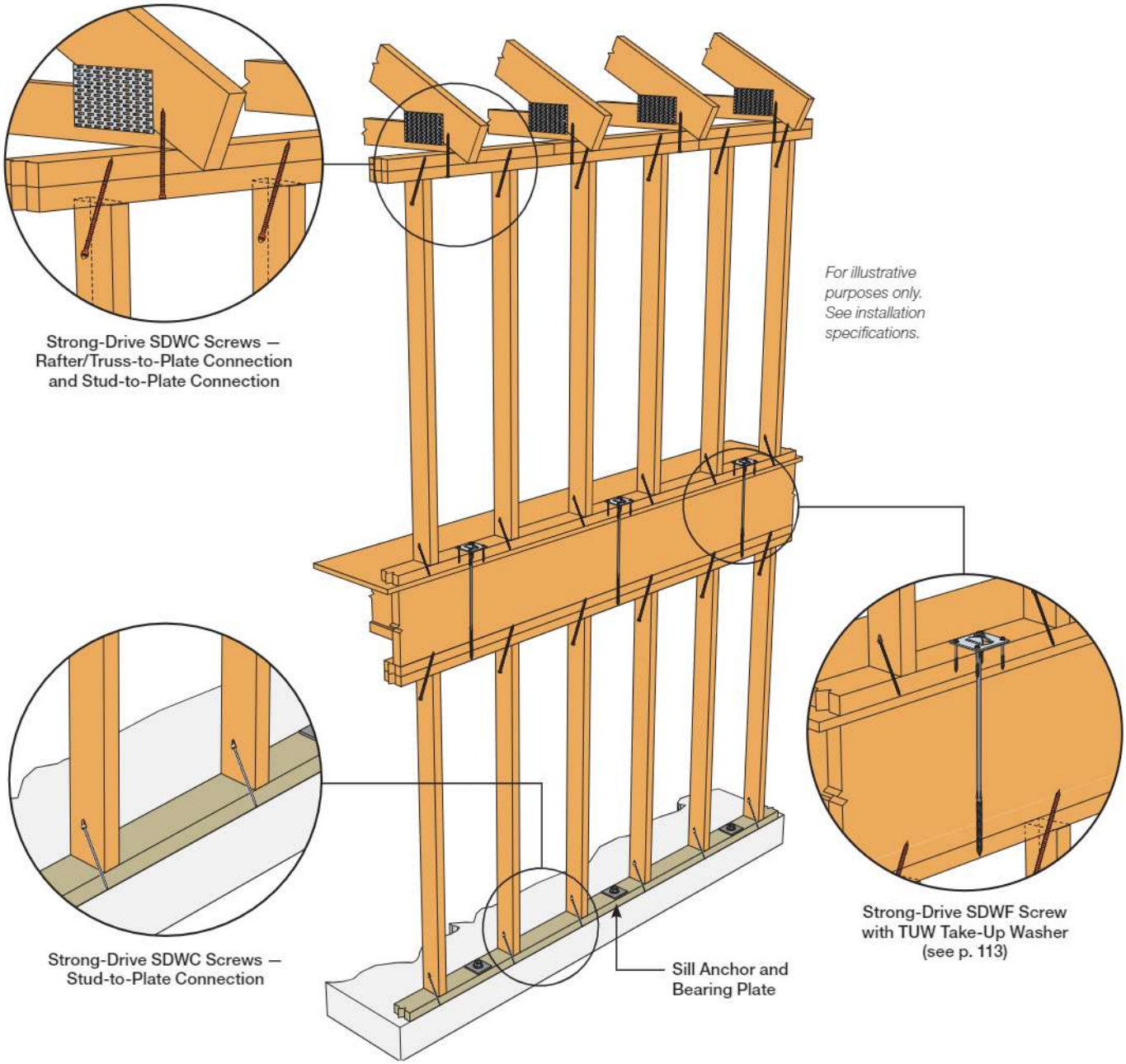

C-F-2023TECHSUP © 2023 Simpson Strong-Tie Company Inc.

Strong-Drive®
SDWC **TRUSS** Screw for Rafter/Truss-to-Top Plate Connections

Load Table

Length (in.)	Model No.	Thread Length (in.)	Installation	Allowable Loads (lb.)								
				SP			DFL			SPF		
				Uplift	F_1	F_2	Uplift	F_1	F_2	Uplift	F_1	F_2
6	SDWC15600	5¾	1	900	505	225	835	405	225	595	305	190
			2	805	380		715	270		505	265	
			3									
			4									
			5	645	360		615	245		485	235	
			6	980	625	445	860	620	375	635	425	300

1. Loads have been increased for wind and earthquake (C_D = 1.6); no further increases allowed. Reduce when other loads govern.
2. For installations 1–6, the SDWC is to be installed through a double 2x top plate into a minimum 2x4 truss or rafter. In addition, for installation 2, where the 2x truss or rafter is supported by a multi-ply beam, the SDWC is to be installed as shown for the installation 2.
3. The SDWC screws shall be driven such that the shank is fully embedded in the connection members, the head is in contact with or embedded in the side member, and the point does not protrude from the lateral surface of the main member. When embedded, the top surface of the head shall be no more than ⅛" beyond flush.
4. An SDWC screw may be used in each ply of two- or three-ply rafters or trusses. The allowable uplift load for each screw shall be multiplied by 0.90, but may be limited by the capacity of the plate or the connection between the top plate to the framing below. SDWC screws in multi-ply assemblies must be spaced a minimum of 1½" o.c.
5. Screws are shown installed on the interior side of the wall. Installations on the exterior side of the wall are acceptable when the rafter/truss overhangs the top plates a minimum of 3½".
6. For Uplift Connection Load Path, the designer shall verify complete continuity of the uplift load path.
7. F_1 and F_2 are the directions parallel and perpendicular to the wall, respectively.
8. When a screw is loaded simultaneously in more than one direction, the allowable load must be evaluated using the unity equation:
   (Design Uplift ÷ Allowable Uplift) + (Design F_1 ÷ Allowable F_1) + (Design F_2 ÷ Allowable F_2) ≤ 1.0.
   The three terms in the unity equation represent the possible generated force directions. The number of terms that must be considered for simultaneous loading is the sole discretion of the designer and depends on the method of calculating wind forces and the utilization of the screws within the structural system.
9. Table loads do not apply to trusses with end-grain bearing.
10. Top plate-to-stud and top-plate splice connections shall be fastened per applicable Building Code.
11. Top plate rotation does not occur at allowable loads.
12. Directions: F_1 is a force parallel to the top plate; F_2 is a force perpendicular to the top plate; Uplift is a force in the upward vertical direction.

Typical Roof-to-Wall Connection

Installation 1 — Rafter/Truss Offset from Stud — Fasten from Underside of Top Plate

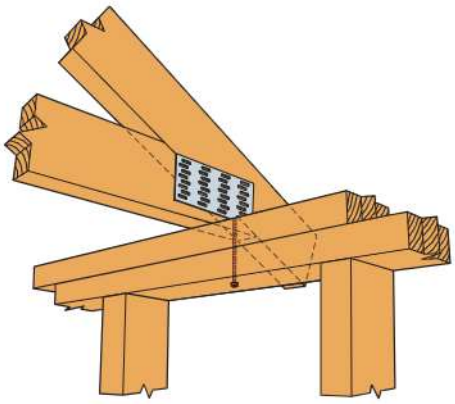

Optional SDWC Installation — Truss Offset from Stud

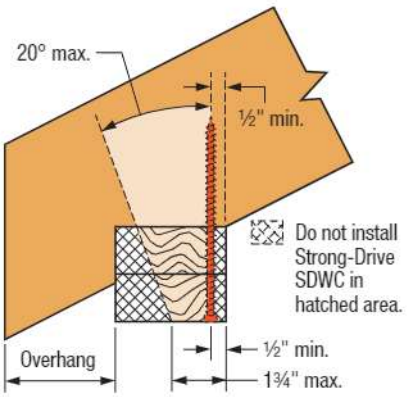

Allowable Installation Range
(truss offset from stud only)

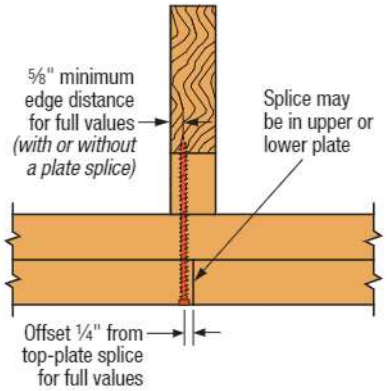

Min. Edge Distance for Top-Plate Splice

C-F-2023TECHSUP © 2023 Simpson Strong-Tie Company Inc.

Strong-Drive® SDWC TRUSS Screw for Rafter/Truss-to-Top Plate Connections (cont.)

Optional Roof-to-Wall Connections

Installation 2 — Rafter/Truss Offset from Stud: Fasten from Front Bottom Corner of Double Top Plate

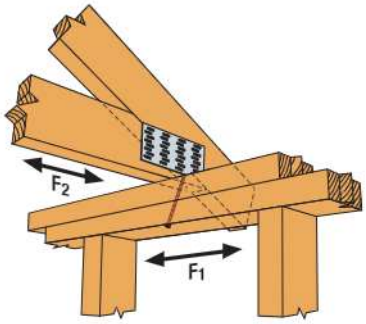

Optional SDWC Installation — Truss Offset from Stud

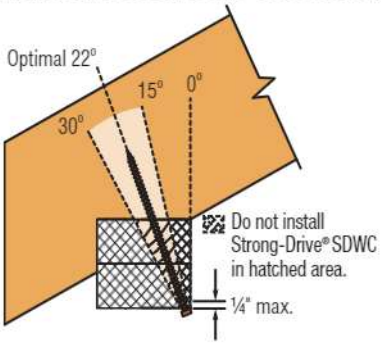

Allowable Installation Range

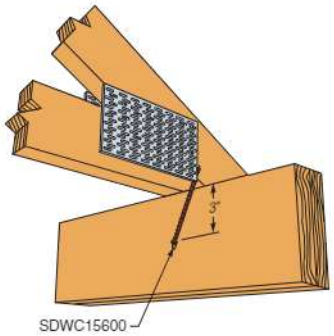

Optional SDWC Configuration — Truss to Multi-Ply Beam

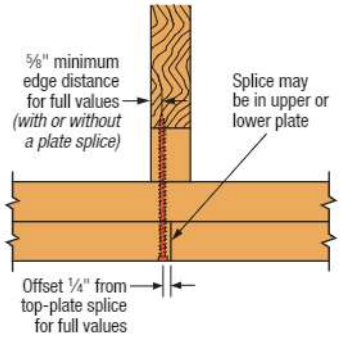

Mininum Edge Distance for Top-Plate Splice

Installation 3 — Rafter/Truss Aligned with Stud: Fasten From Wide Face of Stud

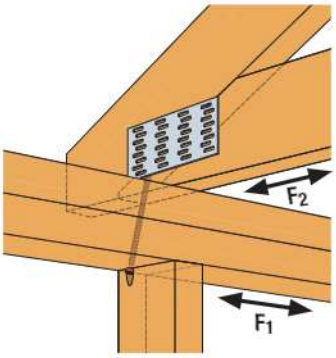

Optional SDWC Installation — Truss Aligned with Stud

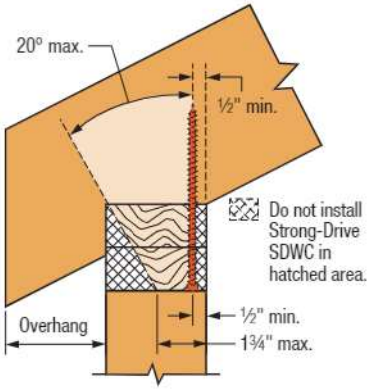

Allowable Installation Range
(rafter/truss offset from stud only)

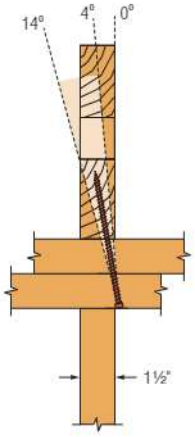

Allowable Installation Range
(front view)

C-F-2023TECHSUP © 2023 Simpson Strong-Tie Company Inc.

Strong-Drive®
SDWC **TRUSS** Screw for Rafter/Truss-to-Top Plate Connections (cont.)

Installation 4 — Rafter/Truss Aligned with Stud: Fasten from Narrow Face of Stud

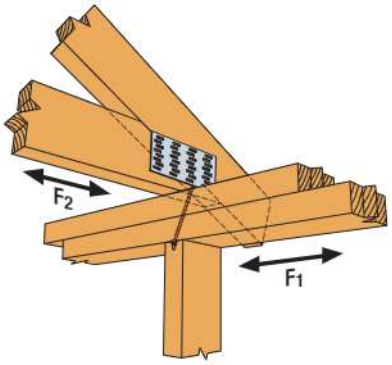

SDWC Installation — Truss Aligned with Stud or Over Header
(offset truss similar)

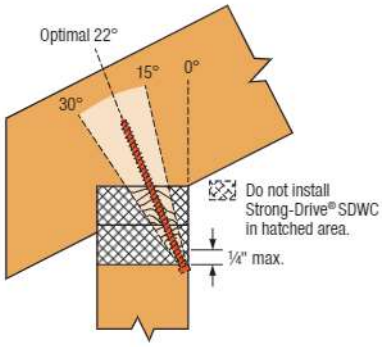

Allowable Installation Range

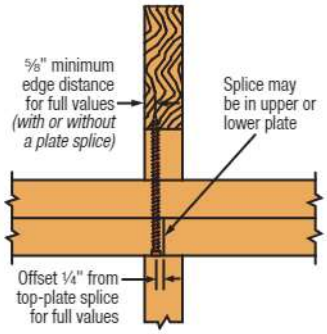

Min. Edge Distance for Top-Plate Splice

Installation 5 — Rafter/Truss Aligned with Stud: Fasten from Corner of Stud

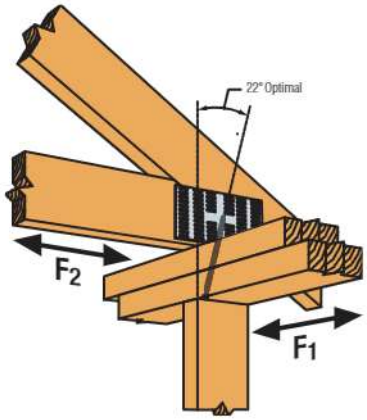

Optional SDWC Truss Screw Installation — Truss Aligned with Stud
(rafter aligned with stud similar)

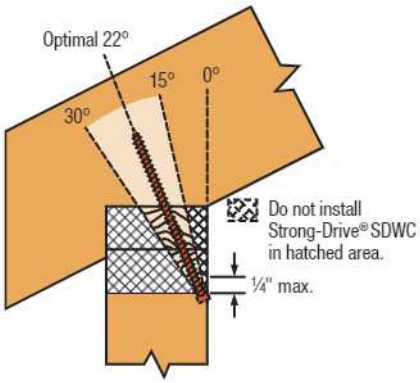

Allowable Installation Range
(side view)

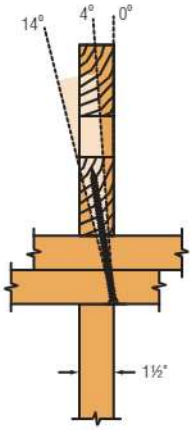

Installation Angle Range
(front view)

Installation 6 — Gable End Truss Offset from Stud — Fasten Top Plate to Gable End Truss

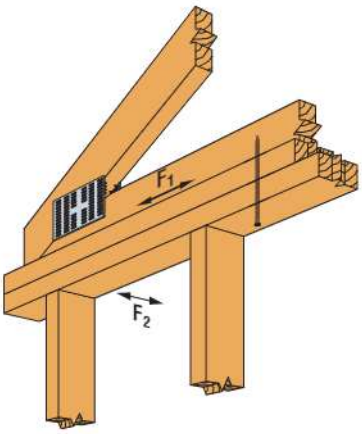

Optional SDWC Installation — Gable End Truss Offset from Stud

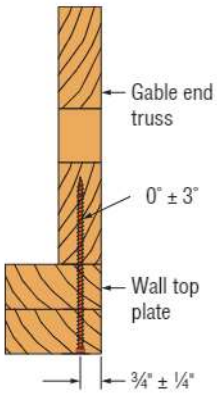

Allowable Installation Range

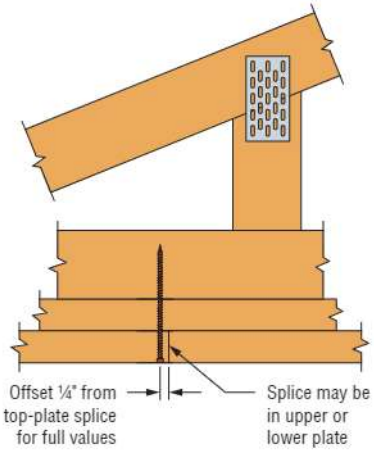

Mininimum Edge for Top-Plate Splice

C-F-2023TECHSUP © 2023 Simpson Strong-Tie Company Inc.

Strong-Drive®
SDWC TRUSS Screw for Rafter/Truss-to-Top Plate Connections (cont.)

SDWC Rafter/Truss-to-Top Plate Connections Utilizing Two-Screw Configurations

Allowable loads for the SDWC Truss screws when installed from the underside of the top plate and from the face of the rafter/truss using a two-screw configuration per the detail configurations shown on the next page.

SDWC Truss Screw — Allowable Loads for Rafter/Truss-to-Top Plate Two-Screw Connections

Configuration	Length (in.)	Model No.	Thread Length (in.)	Quantity Required	Allowable Loads (lb.)					
					DFL/SP			SPF/HF		
					Uplift	F_1	F_2	Uplift	F_1	F_2
A	6	SDWC15600	5¾	2	1,200	685	995	1,045	495	670
B					1,195	680	925	1,195	405	680
C					905	535	790	850	330	595
D					1,115	645	920	960	385	610

1. Loads have been increased for wind and earthquake loading (C_D = 1.6) with no further increase allowed; reduce where other loads govern.
2. For Uplift Connection Load Path, the designer shall verify complete continuity of the uplift load path.
3. When cross-grain tension cannot be avoided, supplemental reinforcement shall be considered by the designer.
4. The SDWC screws shall not interfere with other fasteners or truss plates. Where truss plates must be penetrated for Configuration D, a truss designer approval is required in accordance with ANSI/TPI 1-2007/2014, Section 7.5.3.4 and 8.9.2. To predrill through truss plate, use a ⅛" drill bit.
5. The metal installation guide provided with the screw is angled at 22.5° and can be used for Configurations C and D; proper installation angles for all configurations are the responsibility of the installer.
6. SDWC screws must be offset min. ¼" from top-plate splices for full values.
7. Loads assume minimum overhang of 3½".
8. When a screw is loaded simultaneously in more than one direction, the allowable load must be evaluated using the unity equation: (Design Uplift ÷ Allowable Uplift) + (Design F_1 ÷ Allowable F_1) + (Design F_2 ÷ Allowable F_2) ≤ 1.0. The three terms in the unity equation represent the possible generated force directions. The number of terms that must be considered for simultaneous loading is the sole discretion of the designer and depends on the method of calculating wind forces and the utilization of the screws within the structural system.
9. An SDWC screw may be used in each ply of two- or three-ply rafters or trusses. The allowable uplift load for each screw shall be multiplied by 0.90, but may be limited by the capacity of the plate or the connection between the top plate to the framing below. SDWC screws in multi-ply assemblies must be spaced a minimum of 1½" o.c.
10. Directions: F_1 is a force parallel to the top plate; F_2 is a force perpendicular to the top plate; Uplift is a vertical upward force.

C-F-2023TECHSUP © 2023 Simpson Strong-Tie Company Inc.

Strong-Drive®
SDWC **TRUSS** Screw for Rafter/Truss-to-Top Plate Connections (cont.)

SDWC Rafter/Truss-to-Top Plate Two-Screw Connections

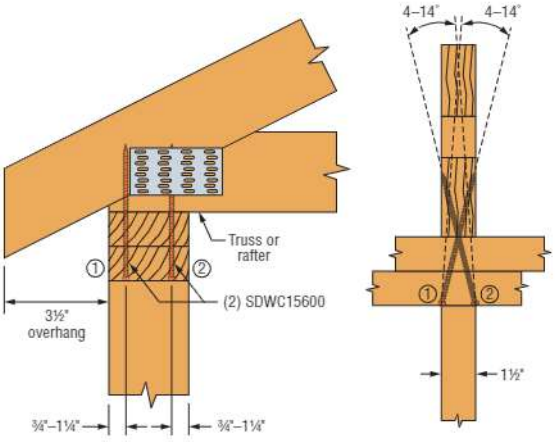

Configuration A:
Truss Aligned with Stud
Install Through Top Plate into Rafter/Truss

Both screws installed at a 4° – 14° angle, offset ¾" – 1¼" from opposite edges of the top plate.

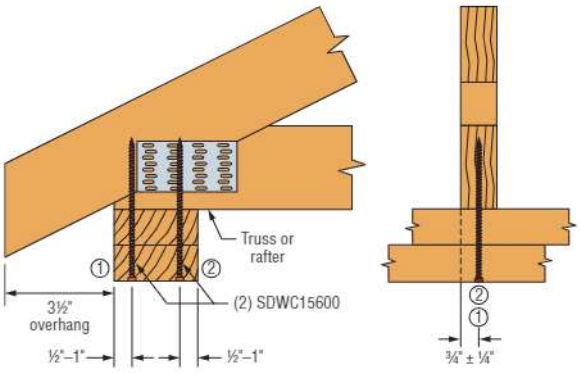

Configuration B:
Truss Offset from Stud
Install Through Top Plate into Rafter/Truss

Both screws installed vertically ±5° into the center of the rafter/truss from the underside of the top plate, ½" – 1" from opposite edges of the top plate.

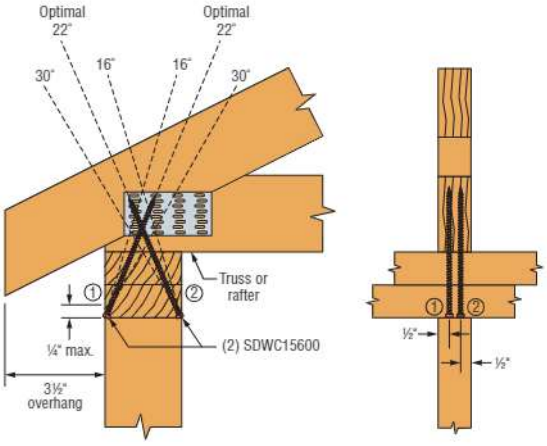

Configuration C:
Install Through Top Plate into Rafter/Truss

Both screws installed at a 16° – 30° angle, offset ½" from the opposite edges of rafter/truss. Use metal installation guide included in screw kits for optimal 22° installation.

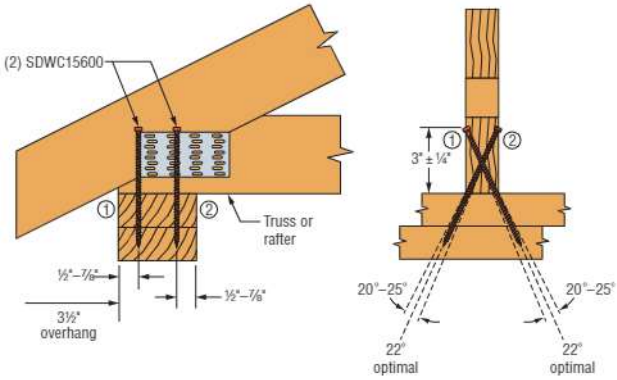

Configuration D:
Install Rafter/Truss to Top Plate

Both screws installed at a 20° – 25° angle with a ½" – ⅞" offset from the opposite edges of top plate 3" ± ¼" above top plate. Use metal installation guide included in screw kits for optimal 22° installation. To predrill through truss plates, use a ⅛" drill bit.

C-F-2023TECHSUP © 2023 Simpson Strong-Tie Company Inc.

Strong-Drive®
SDWC TRUSS Screw for Pre-Engineered Top-of-Wall Assemblies

SDWC Pre-Engineered Top-of-Wall Assemblies for Continuous Uplift Load Path for SPF or Better Wood Framing

The Strong-Drive SDWC TRUSS Screw is designed to fasten roof rafters/trusses to wall plates and wall plates to studs. When used to connect rafters/trusses to top plates, a second connection from top plates to the studs below is necessary in order to maintain a continuous load path as would be required for any connection method. This table provides allowable uplift loads for the five pre-engineered top-of-wall assemblies shown on the next page. These assemblies have been designed and tested to provide a continuous load path from the rafter/truss to the studs in the wall below and account for any reductions that may result from top plate rotation due to eccentric loading. The continuous load path from the bottom of the stud to the supporting structure is by others.

SDWC Truss Screw — Allowable Uplift Loads for Pre-Engineered Top-of-Wall Assemblies

Wall Assembly	Rafter/Truss Connection to Top Plates	Top Plate Connection to Studs at 16" On Center[4]	Allowable Rafter/Truss Uplift Loads (lb.)					
			2x4 SPF Framing			2x6 SPF Framing		
			Rafter/Truss Spacing			Rafter/Truss Spacing		
			12	16	24	12	16	24
A	1 – SDWC15600	1 – SDWC15600	385	485	485	385	485	485
B		2 – SDWC15600	485	485	485	485	485	485
C		1 – SDWC15600	305	410	485	305	410	485
D		1 – SDWC15600	120	160	240	120	160	240
E		WSP per designer[3]	145	195	290	105	140	210

1. Allowable loads apply to wood members with an assigned specific gravity of at least 0.42.
2. Uplift loads have been increased for wind loading (C_D = 1.6) with no further increases allowed; reduce where other loads govern.
3. Wood structural panel (WSP) sheathing used in Wall Type E must be designed and constructed to resist uplift in accordance with the American Wood Council's 2021 or 2015 Special Design Provisions for Wind and Seismic standard.
4. As indicated in table header, studs spaced at 16" o.c. for all assemblies.

C-F-2023TECHSUP © 2023 Simpson Strong-Tie Company Inc.

Strong-Drive®
SDWC **TRUSS** Screw for Pre-Engineered Top-of-Wall Assemblies (cont.)

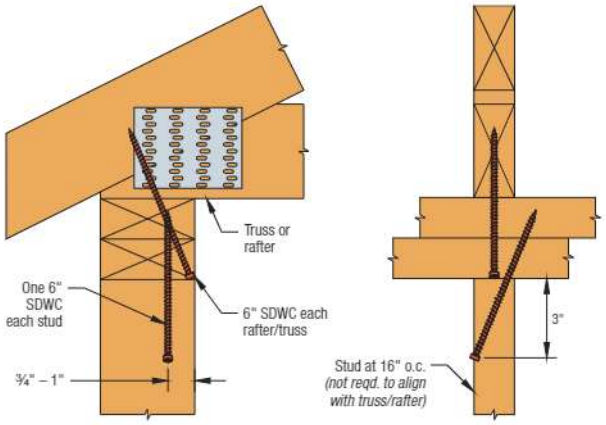

Wall Assembly A
One SDWC as Angled Stud Screw

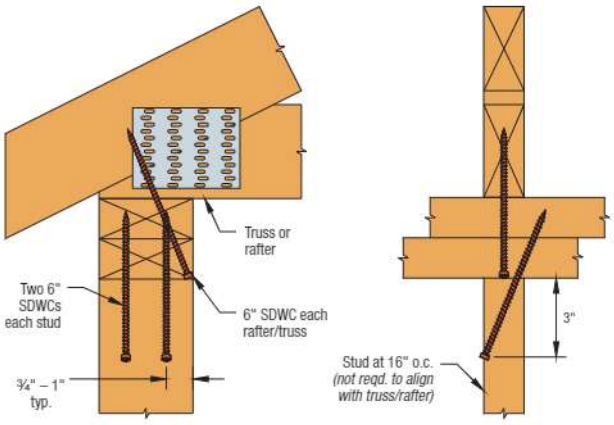

Wall Assembly B
Two SDWC as Angled Stud Screw

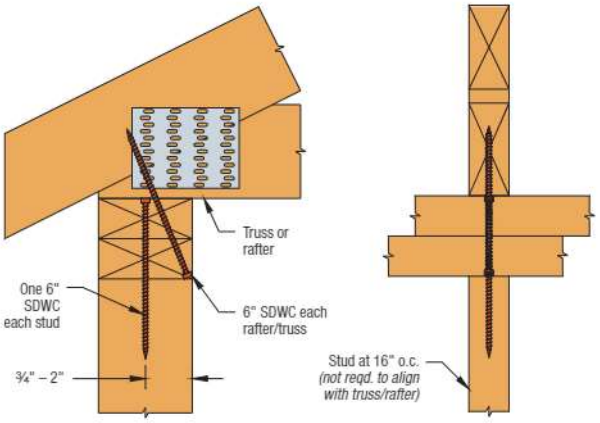

Wall Assembly C
One SDWC as Vertical Stud Screw
Through Both Plates

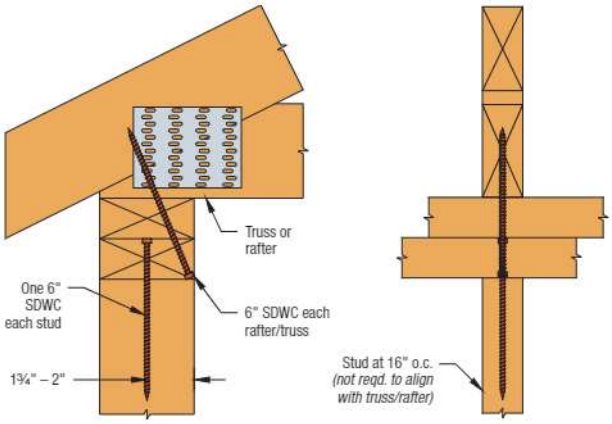

Wall Assembly D
One SDWC as Vertical Stud Screw
Through Lower Plates

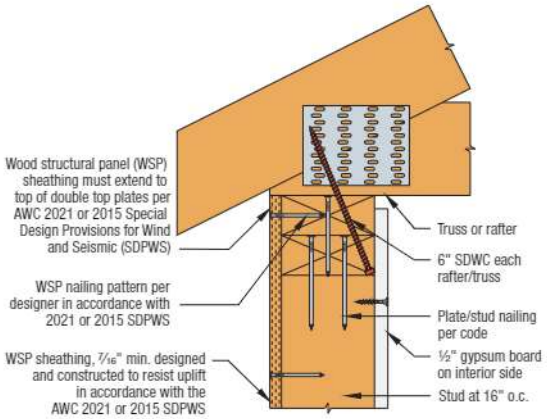

Wall Assembly E
WSP Designed for Uplift

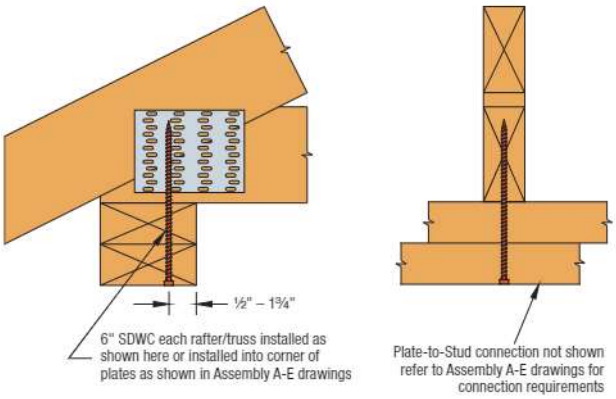

Rafter/Truss Offset from Stud

C-F-2023TECHSUP © 2023 Simpson Strong-Tie Company Inc.

Strong-Drive®
SDWC **TRUSS** Screw for Energy Heel Truss-to-Top Plate Connections

Allowable Roof-to-Wall Single-Screw Connection Loads for Raised-Heel/Energy-Heel Trusses and Trusses with No Overhangs

Allowable roof-to-wall connection loads published for the Simpson Strong-Tie SDWC Truss screw (SDWC15600) are based on a minimum 3½" overhang as shown in the figures below. The following allowable roof-to-wall single-screw connection loads for truss heel configurations that do not meet the minimum overhang requirement, such as a standard heel with no overhang, or a raised-heel condition where the screw only penetrates into the truss bottom chord and the bottom chord does not extend past the top plate.

Testing was performed in accordance with ICC-ES AC233 Sub-Annex CA, Section CA3.0 (*Acceptance Criteria for Alternate Dowel-Type Threaded Fasteners, Approved 2020*) to evaluate the effects of no overhang, with and without truss plates in the region of the SDWC Truss screw. The resulting allowable loads for these conditions are provided in the following table. To achieve the allowable load for the "No Overhang — Reinforced" condition, truss plates must be located as shown in the figures below; otherwise, the allowable load for "No Overhang — Unreinforced" shall be used. Except as noted, all other installation information regarding the SDWC screws for rafter/truss-to-top plate connections as specified in the current *Fastening Systems* catalog shall apply.

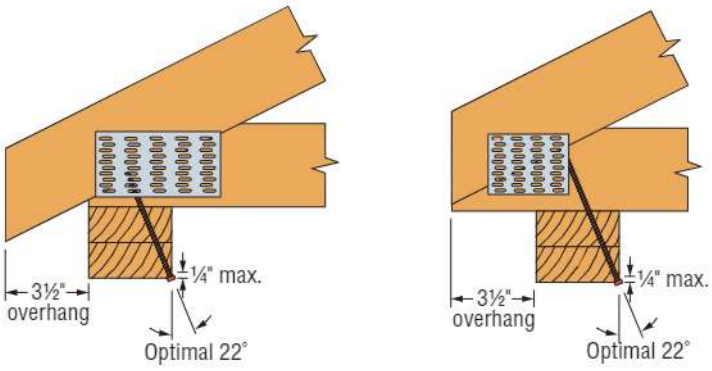

Standard Installation (with minimum 3½" overhang)

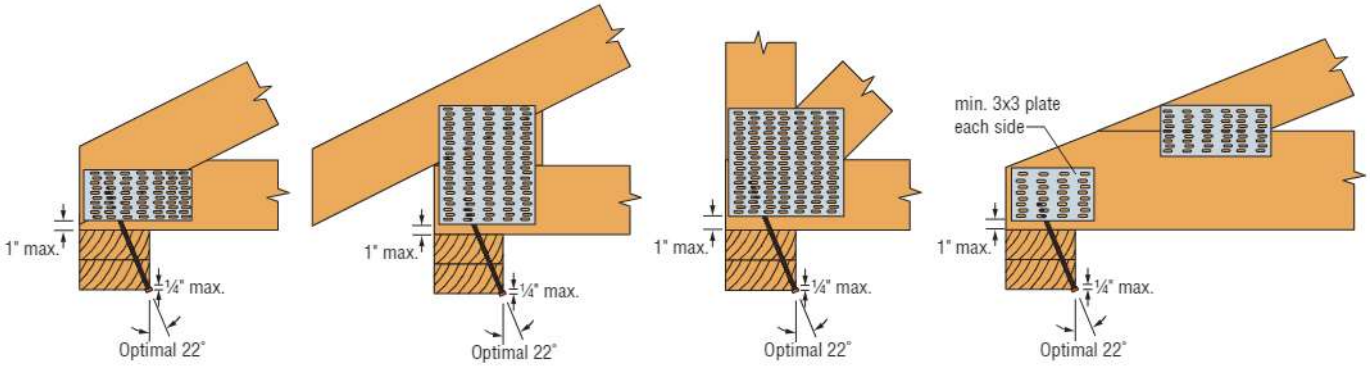

Installation with No Overhang — Reinforced

Note: Truss plates must be located no greater than ¼" or 2" from end of chord on 2x4 or 2x6 or larger walls, respectively.

C-F-2023TECHSUP © 2023 Simpson Strong-Tie Company Inc.

Strong-Drive®
SDWC **TRUSS** Screw for Energy Heel Truss-to-Top Plate Connections (cont.)

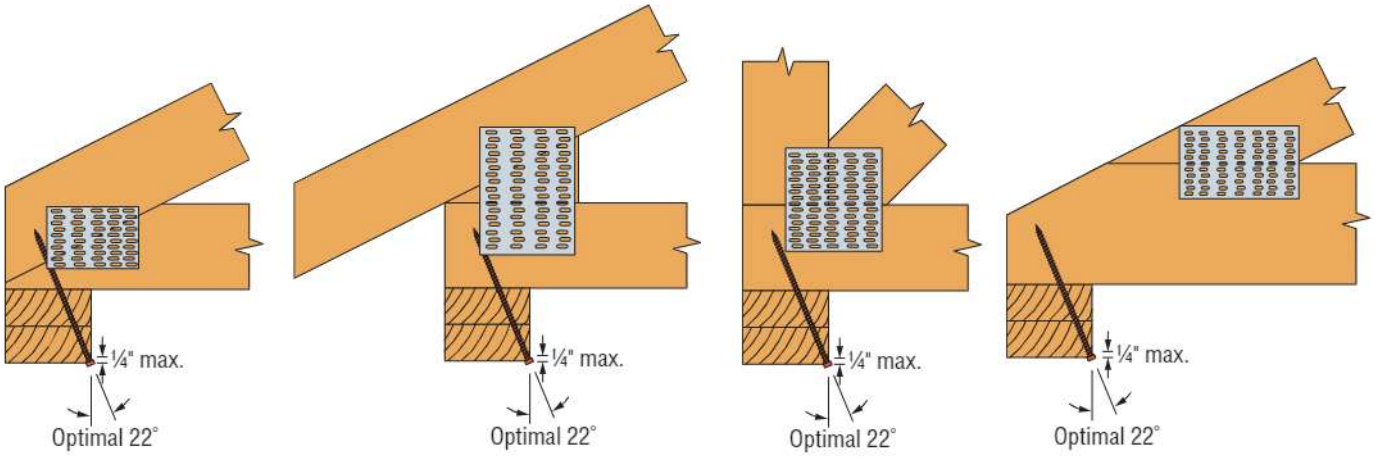

Installation with No Overhang — Unreinforced

SDWC Truss Screw — Allowable Loads

Model No.	Condition	Allowable Loads SPF/HF/DFL/SP (lb.)		
		Uplift	F_1	F_2
SDWC15600	Standard Installation	485	115	190
	No Overhang – Reinforced	450		
	No Overhang – Unreinforced	280		

1. Allowable loads apply to wood members with an assigned specific gravity of at least 0.42.
2. Loads have been increased for wind and earthquake loading (C_D = 1.6) with no further increase allowed; reduce where other loads govern.
3. For Uplift Connection Load Path, the designer shall verify complete continuity of the uplift load path.
4. When cross-grain tension cannot be avoided, supplemental reinforcement shall be considered by the designer.
5. SDWC screws are shown installed at the optimal 22° angle, installation angles from 15° to 30° are acceptable. Tabulated loads also apply to any of the five approved truss-to-plate installations using the Quik Stik™ Fastening Tool as specified in flier F-F-QUIKSTIK at **strongtie.com**.
6. SDWC screws must be offset minimum ¼" from top-plate splices and must have minimum edge distances per pp. 84–86 or flier F-F-QUIKSTIK at **strongtie.com**.
7. Directions: F_1 is a force parallel to the top plate; F_2 is a force perpendicular to the top plate; Uplift is a vertical upward force.

C-F-2023TECHSUP © 2023 Simpson Strong-Tie Company Inc.

Strong-Drive®
SDWC **TRUSS** Screw
for Factory-Built Structures Truss-to-Top Plate Connections

The allowable uplift loads are provided for the Simpson Strong-Tie SDWC15600 wood screw installed with a ⅝" OSB bearing strip between the truss and top plate.

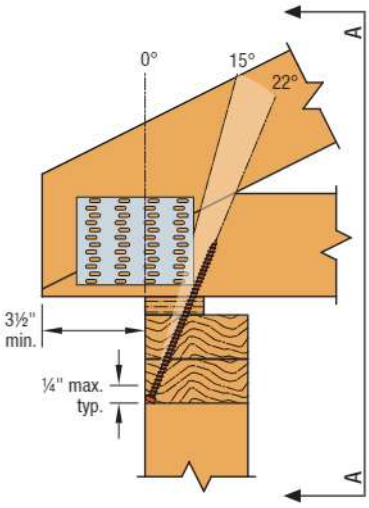

With Overhang Installation

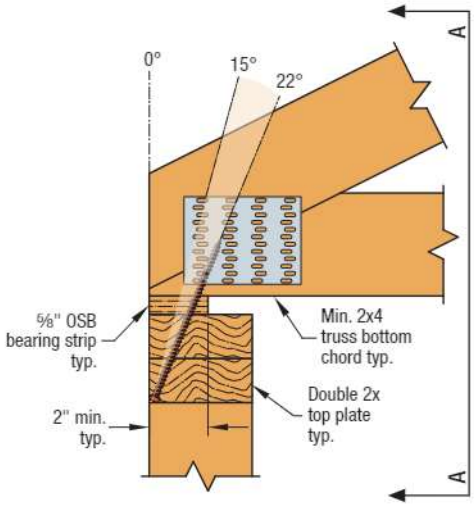

Without Overhang Installation

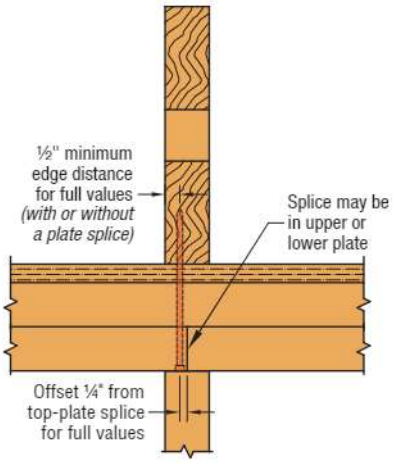

Section A-A
Min. Edge Distance for Top-Plate Splice

SDWC Truss Screw — Allowable Uplift Loads for Factory-Built Structures

Length (in.)	Model No.	Thread Length (in.)	Allowable Uplift Loads SPF/DFL/SP (lb.)	
			With Overhang	Without Overhang
6	SDWC15600	5¾	415	370

1. Loads have been increased for wind or earthquake (C_D = 1.6); no further increase allowed; reduce where other loads govern.
2. Allowable loads apply to spruce-pine-fir, hem-fir, Douglas fir–larch, and southern pine.
3. Allowable loads are for an SDWC installed per the "With Overhang" or "Without Overhang" installation details.
4. SDWC must be installed on the exterior side of the wall.
5. SDWC must be installed at an angle between 10° and 22½°. Guide provided with screws is at 22½°.
6. For Uplift Continuous Load Path, top-plate-to-stud connections must be located on the exterior side of the wall.
7. Table loads do not apply to trusses with end-grain bearing.
8. Top plate, stud, and top-plate splice fastened per applicable building code.

C-F-2023TECHSUP © 2023 Simpson Strong-Tie Company Inc.

Strong-Drive®
SDWC **TRUSS** Screw for Boundary Blocking-to-Top Plate Connections

The SDWC was tested and evaluated to establish allowable lateral loads bewteen wall plates and boundary members in a roof diaphragm.

SDWC Truss Screw — Allowable Shear Loads (F_1) for Boundary Member/Blocking-to-Wall Connections — DFL, SP, SPF, HF

Configuration	Length (in.)	Model No.	Nominal Top Plate Thickness (in.)	Thread Length (in.)	Allowable Loads per Screw (lb.) 2x Boundary Member/Blocking	
					DFL/SP	SPF/HF
					F_1	F_1
A	4½	SDWC15450	(2) 2x	4¼	295	270
B					175	160
A	6	SDWC15600		5¾	540	495
B					440	405

1. Allowable loads are based on testing per ICC-ES AC233 and are limited to parallel-to-grain loading.
2. Allowable loads are shown at the wood load duration factor of $C_D = 1.60$.
3. Minimum spacing of the SDWC is 5" o.c., minimum end distance is 5", and minimum edge distance or installation angle as shown in configurations A and B.
4. Double top plate is required to be independently fastened per the code.
5. Minimum of (2) SDWC fasteners required per individual boundary member/blocking.
6. For species and grades of framing other than DFL/SP, reduced allowable loads shall be determined by the specific gravity adjustment factor of 1−(0.5 − G); where G is the specific gravity referenced from the NDS.
7. SDWC is driven flush to top plate surface.

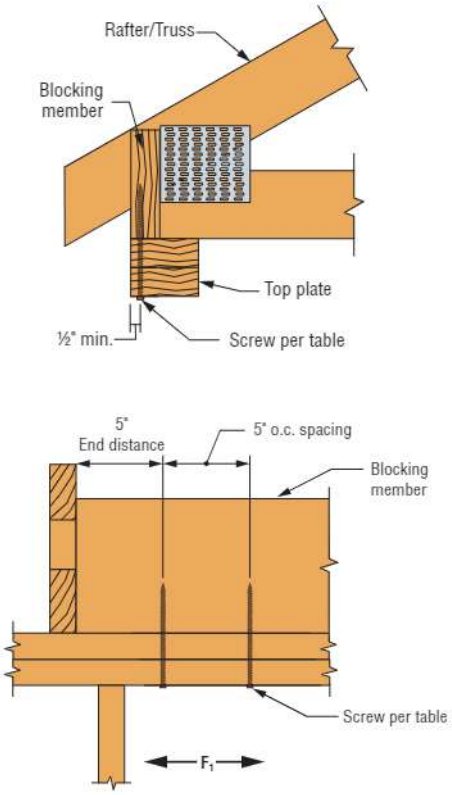

Configuration A
Between Studs — Vertical Installation (±5°)

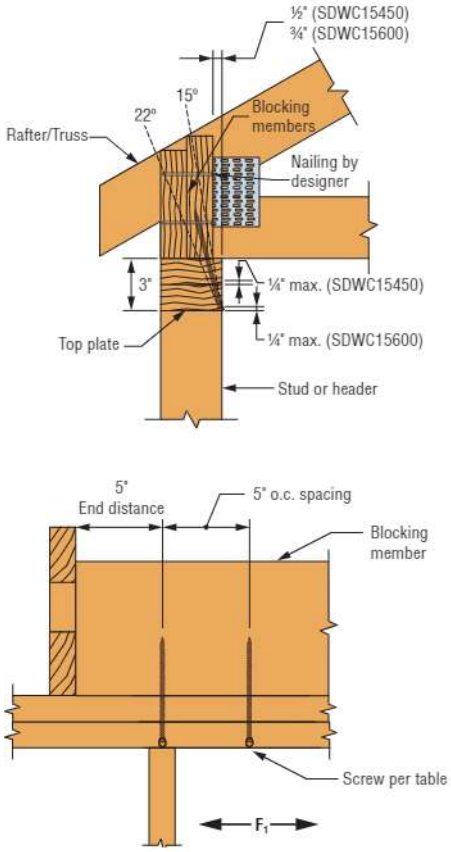

Configuration B
Aligned with Studs — Angle Installation (15° – 22°)
Note: *Screw not aligned with stud/header, use vertical installation as shown in Configuration A (Configuration B load applied).*

C-F-2023TECHSUP © 2023 Simpson Strong-Tie Company Inc.

Strong-Drive® SDWC TRUSS Screw for Wide Face of Stud-to-Plate Connections

SDWC Truss Screw — Allowable Loads for Wide Face of Stud-to-Plate Connections

Length (in.)	Model No.	No. of Screws Installed	Thread Length (in.)	Nominal Plate Thickness (in.)	Allowable Loads (lb.)			
					DFL/SP		SPF/HF	
					Uplift	F_2	Uplift	F_2
4½	SDWC15450	1	4¼	2x	360	215	310	153
		2			690	390	595	280
		3			1,035	585	895	420
6	SDWC15600	1	5¾	2x	450	189	310	153
		2			865	345	595	280
		3			1,295	515	895	420
6	SDWC15600	1	5¾	(2) 2x	590	177	510	152
		2			1,135	320	980	275
		3			1,700	485	1,470	415

1. Loads have been increased for wind and earthquake loading (C_D = 1.6) with no further increases allowed; reduce where other loads govern.
2. Allowable loads are for SDWC installed per the installation instructions.
3. The SDWC15450 is to be installed through the face of 2x stud into a single 2x bottom plate over a concrete/masonry foundation.
4. The SDWC15600 is to be installed through the face of 2x stud into a single 2x bottom plate over a wood floor system.
5. The SDWC15600 is to be installed through the face of 2x stud into a double 2x top or bottom plate.
6. Double-top plates shall be fastened together as required by applicable code.
7. When a screw is loaded simultaneously in more than one direction, the allowable load must be evaluated using the unity equation: (Design Uplift ÷ Allowable Uplift) + (Design F_1 ÷ Allowable F_1) + (Design F_2 ÷ Allowable F_2) ≤ 1.0. The three terms in the unity equation represent the possible generated force directions. The number of terms that must be considered for simultaneous loading is the sole discretion of the designer and depends on the method of calculating wind forces and the utilization of the screws within the structural system.

Stud-to-Plate Connections

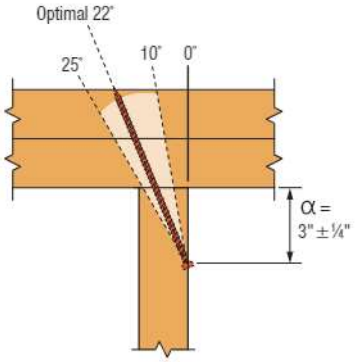

Stud-to-Top Plate Connection
(this application requires SDWC15600)

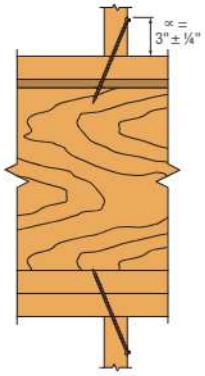

Stud-to-Bottom Plate Connection Over Wood Floor
(this application requires SDWC15600)

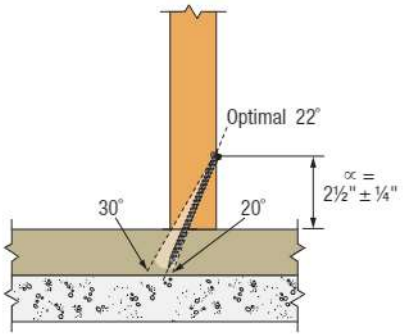

Stud-to-Bottom Plate Connection Over Concrete/Masonry Foundation
(this application requires SDWC15450)

Spacing Requirements

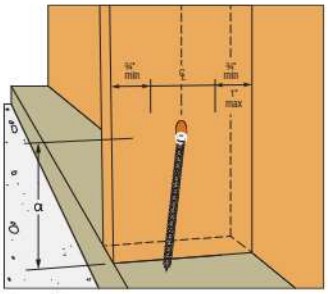

One Screw
One fastener driven in wide face of 2x4, 2x6 or 2x8; maintain minimum edge distance of ¾".

Note: Same installation spacing applies to Stud-to-Top Plate connection.

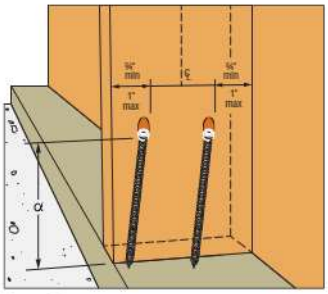

Two Screws
Two fasteners driven into same wide face of 2x4, 2x6 or 2x8. Maintain minimum edge distance of ¾" and maximum edge distance of 1" for proper spacing between fasteners.

Note: Same installation spacing applies to Stud-to-Top Plate connection.

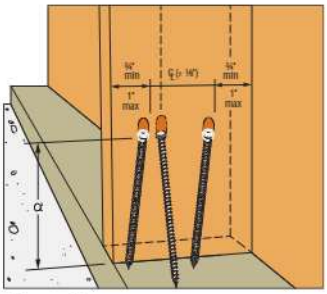

Three Screws
Two fasteners driven into same wide face of 2x4, 2x6 or 2x8. Maintain minimum edge distance of ¾" and maximum edge distance of 1" for proper spacing between fasteners.

One fastener driven within ⅛" of centerline of 2x4, 2x6 or 2x8 on OPPOSITE wide face.

Note: Same installation spacing applies to Stud-to-Top Plate connection.

C-F-2023TECHSUP © 2023 Simpson Strong-Tie Company Inc.

Strong-Drive®
SDWC **TRUSS** Screw for Narrow Face of Stud-to-Plate Connections

The Strong-Drive SDWC Truss screw provides an easy-to-install, high-capacity solution for stud-to-bottom plate or stud-to-top plate(s) connections. This table provides additional allowable load information for the SDWC screws when installed through the narrow face of the stud. The allowable loads are for SDWC screws installed per the details shown on the next page.

SDWC Truss Screw — Allowable Loads for Narrow Face of Stud-to-Plate Connections

Type of Connection	Length (in.)	Model No.	Quantity Required	Thread Length (in.)	Nominal Plate Thickness (in.)	Allowable Loads (lb.)			
						DFL/SP		SPF/HF	
						Uplift	F2	Uplift	F2
1	6	SDWC15600	1	5¾	(2) 2x	590	170	510	145
2	6	SDWC15600	1	5¾	2x	450	155	310	135
3	4½	SDWC15450	1	4¼	2x	295	150	255	130

1. Loads have been increased for wind and earthquake (C_D = 1.6). No further increase is allowed; reduce when other loads govern.
2. The SDWC15600 is to be installed through the narrow face of 2x stud into a single 2x bottom plate over a wood floor system.
3. The SDWC15450 is to be installed through the narrow face of 2x stud into a single 2x bottom plate over a concrete/masonry foundation.
4. Double-top plates shall be fastened together as required by applicable Code.
5. When a screw is loaded simultaneously in more than one direction, the allowable load must be evaluated using the unity equation: (Design Uplift ÷ Allowable Uplift) + (Design F_1 ÷ Allowable F_1) + (Design F_2 ÷ Allowable F_2) ≤ 1.0. The three terms in the unity equation represent the possible generated force directions. The number of terms that must be considered for simultaneous loading is the sole discretion of the designer and depends on the method of calculating wind forces and the utilization of the screws within the structural system.
6. One SDWC screw per stud maximum when installed in the narrow face of the stud. Where the SDWC screws are installed on multiple adjacent studs, the minimum spacing between screws must be 1½". The allowable uplift load for each screw shall be multiplied by 0.90, but may be limited by the capacity of the plate.
7. For Uplift Continuous Load Path, connections in the same area (i.e., truss to plate connector and plate to stud connector) must be on the same side of the wall.

C-F-2023TECHSUP © 2023 Simpson Strong-Tie Company Inc.

Strong-Drive®
SDWC **TRUSS** Screw for Narrow Face of Stud-to-Plate Connections (cont.)

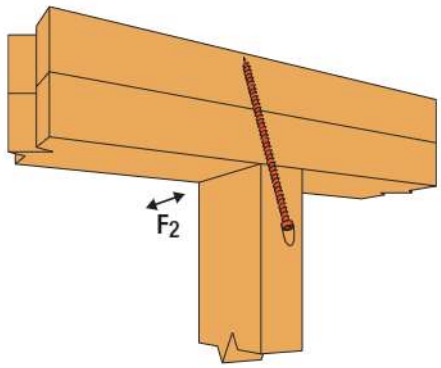

1 **Narrow Face of Stud-to-Top Plate Connection**
(this application requires SDWC15600)

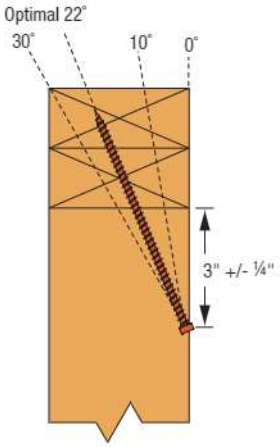

Installation Angle Range

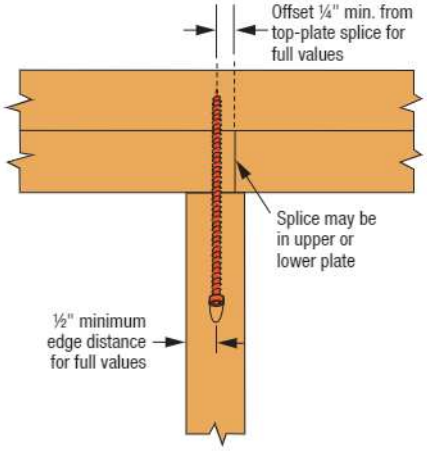

Min. Edge Distance and Splice Offset Requirements

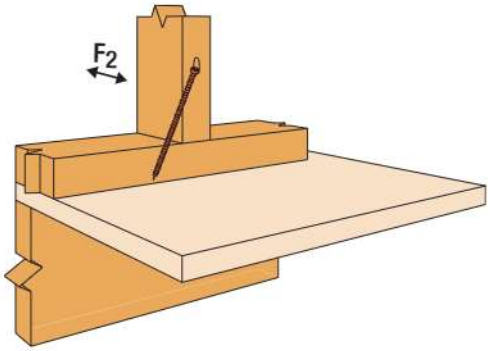

2 **Narrow Face of Stud-to-Bottom Plate Connection Over Wood Floor**
(SDWC15600 shown)

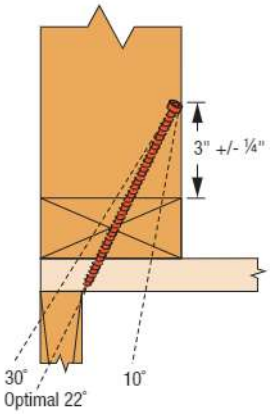

Installation Angle Range

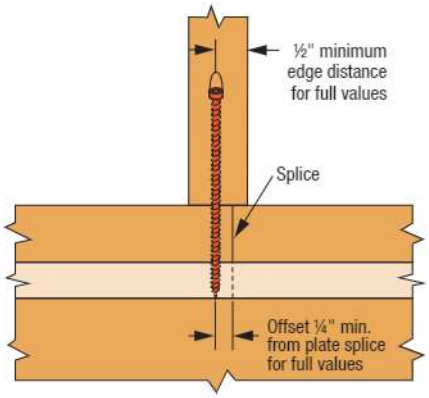

Min. Edge Distance and Splice Offset Requirements

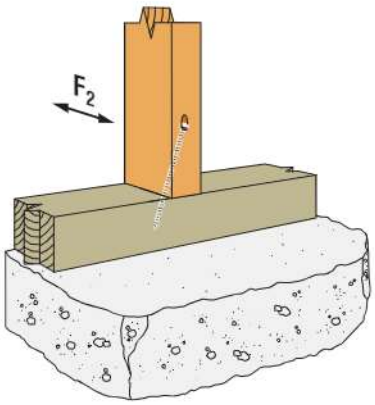

3 **Narrow Face of Stud-to-Bottom Plate Connection Over Masonry/Concrete Foundation**
(the application requires SDWC15450)

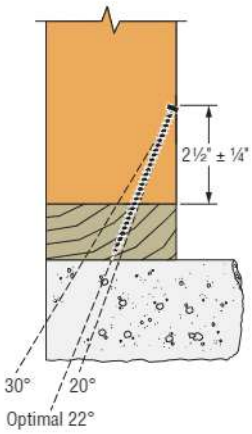

Installation Angle Range

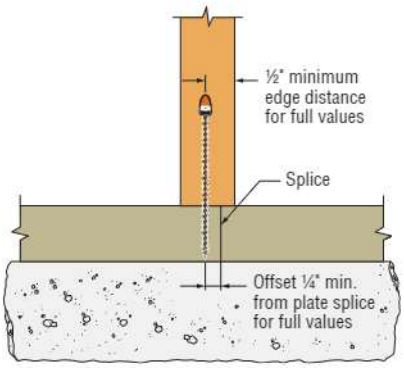

Min. Edge Distance and Splice Offset Requirements

C-F-2023TECHSUP © 2023 Simpson Strong-Tie Company Inc.

Quik Stik™

Rafter/Truss-to-Top Plate Installation Instructions

For the Quik Stik Rafter and Truss Fastening System

Quik Stik and Strong-Drive® SDWC Truss screws are designed to work together for a safe, reliable solution from the leader in structural fastening.

For more information, see p. 104, C-F-2023 *Fastening Systems* catalog; Allowable Loads for Installations 1–6 are shown on p. 84.

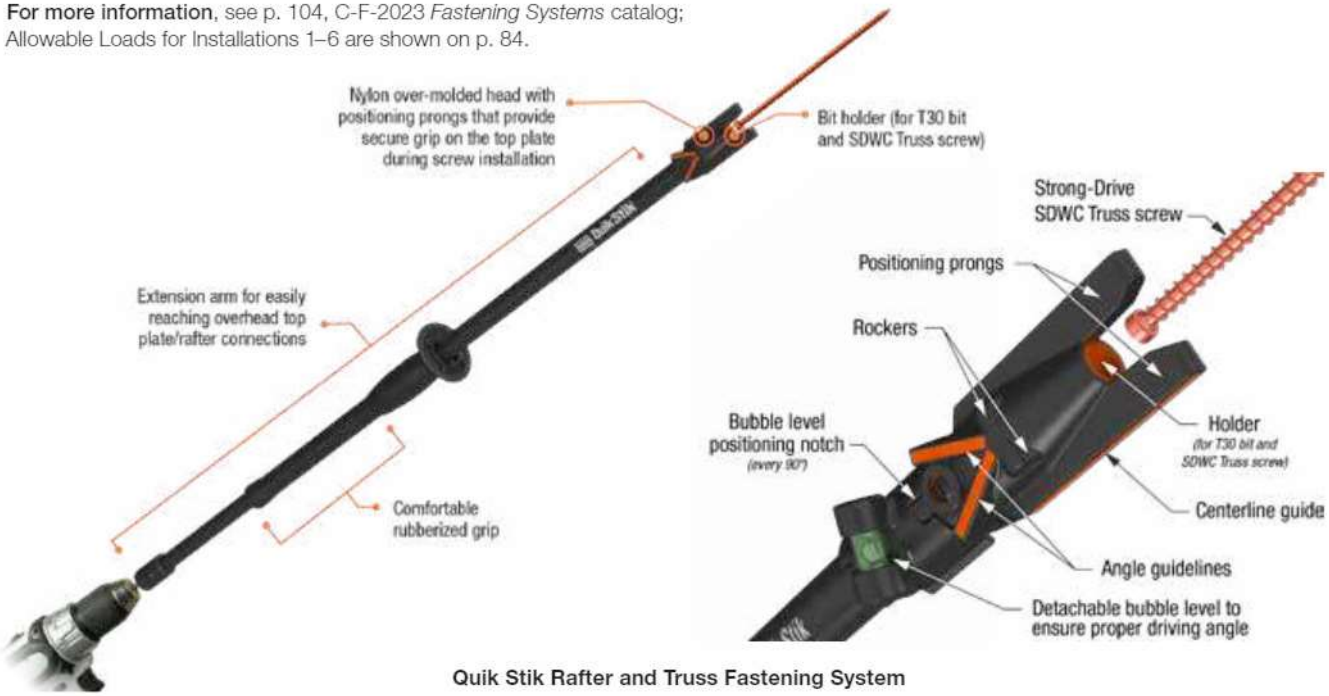

Quik Stik Rafter and Truss Fastening System

Installation Instructions 1 — Rafter/Truss Offset from Stud: Fasten Straight up Through Double Top Plate

These instructions apply to rafter/truss-to-top-plate connections.

These instructions apply only if the rafter/truss is offset from the stud below.

Note: SDWC screws install best with a minimum 18V (if cordless) drill using the matched-tolerance bit included in the SDWC15600KT or Quik Stik system using the included bit.

Installation Steps: Position the Quik Stik head directly under the top plate so that the screw is pointing toward the centerline of the rafter/truss.

Ensure the Quik Stik centerline guide is vertically perpendicular to the top plate.

Drive the SDWC Truss screw straight up through the top plates and into the rafter/truss until the head is flush with the board's surface.

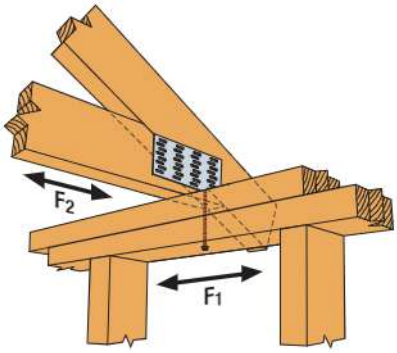

Optional SDWC Installation — Truss Offset from Stud
(rafter offset from stud similar)

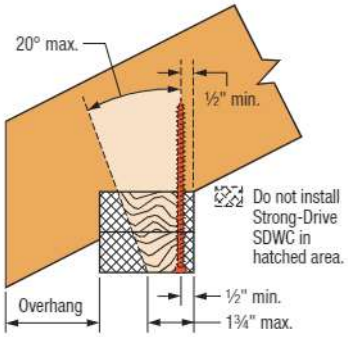

Allowable Installation Range
(rafter/truss offset from stud only)

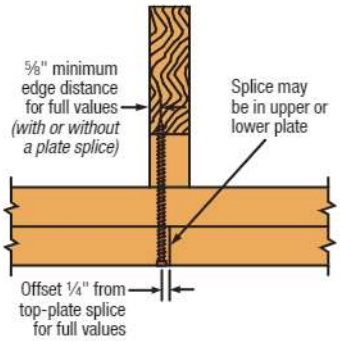

Minimum Edge Distance for Top-Plate Splice

C-F-2023TECHSUP © 2023 Simpson Strong-Tie Company Inc.

Quik Stik™
Installation Instructions (cont.)

Installation Instructions 2 — Rafter/Truss Offset from Stud: Fasten from Front Bottom Corner of Double Top Plate

These instructions apply only if the rafter/truss is offset from the stud below and the installation of the screw is from the corner of the top plate.

Installation Steps: Position the Quik Stik so that the positioning prongs straddle the bottom edge of the double top plate and with the SDWC screw set to enter the bottom member along its edge.

Ensure the Quik Stik centerline guide points to the center of the rafter/truss and that the orange angle guide is perpendicular to the top plate (alternatively, check to ensure that the bubble is visible in the level window).

Drive SDWC screw through the top plates and into the rafter/truss.

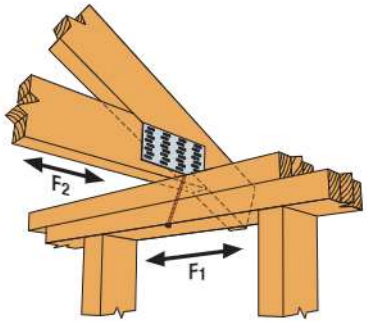

Optional SDWC Installation — Truss Offset from Stud

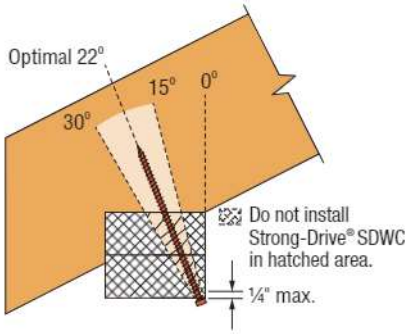

Installation Angle Limit

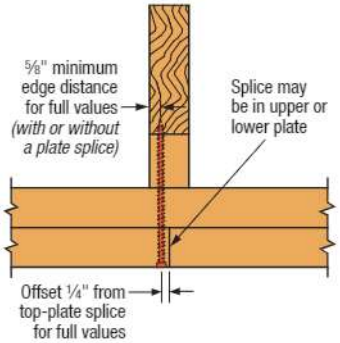

Mininum Edge Distance for Top-Plate Splice

Installation Instructions 3 — Rafter/Truss Aligned with Stud: Fasten from Wide Face of Stud

These instructions apply to rafter/truss-to-top-plate connections utilizing one or two screws when installed from the underside of the top plate and from the wide face of the rafter/truss.

Installation Steps: Position the Quik Stik head so that its positioning prongs are in contact with the framing where the top plate meets the wide face of the stud.

Sight along the Quik Stik centerline guide to align the tool with the centerline of the rafter/truss. If the rafter/truss is offset from the stud, be sure to install the screw on the overhanging side.

Adjust the installation angle of the head to align with the rafter/truss centerline.

For a one screw installation: position the screw in the central one third of the wide face.

For a two-screw installation: see Configuration A on p. 88 for screw locations and edge distances.

Drive the SDWC Truss screw through the top plates and into the rafter/truss.

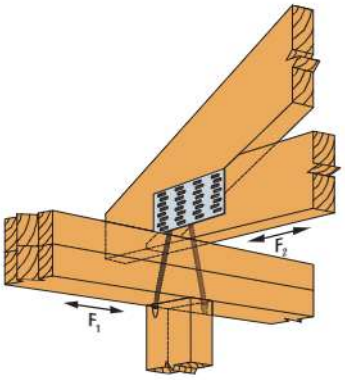

Optional SDWC Installation — Two-Screw Wide-Face Installation Shown

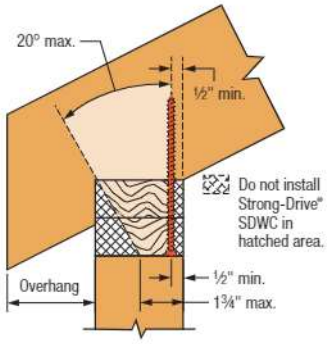

Allowable Installation Range
(rafter/truss offset from stud only)

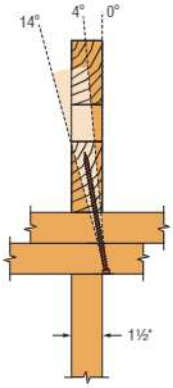

Allowable Installation Range
(front view)

C-F-2023TECHSUP © 2023 Simpson Strong-Tie Company Inc.

Quik Stik™
Installation Instructions (cont.)

Installation Instructions 4 — Rafter/Truss Aligned with Stud: Fasten from Narrow Face of Stud

These instructions apply if the rafter/truss is aligned with the stud below or if there is blocking directly below the top plate.

Installation Steps: Put the point of the screw in the seam between the top plate and stud — or on the desired spot for installation — and pivot the whole tool up past 45°.

Drive the SDWC Truss screw point into the wood surface so that the first two screw threads embed into the wood. Pivot the tool downward until the bubble appears in the level window, and continue to drive the SDWC Truss screw through the top plates and into the rafter/truss.

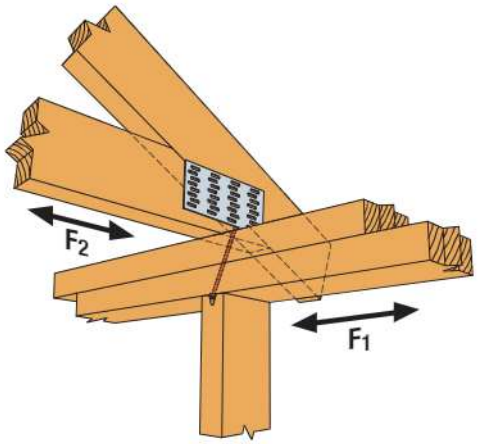

Optional SDWC Truss Screw Installation — Truss Aligned with Stud
(rafter aligned with stud similar)

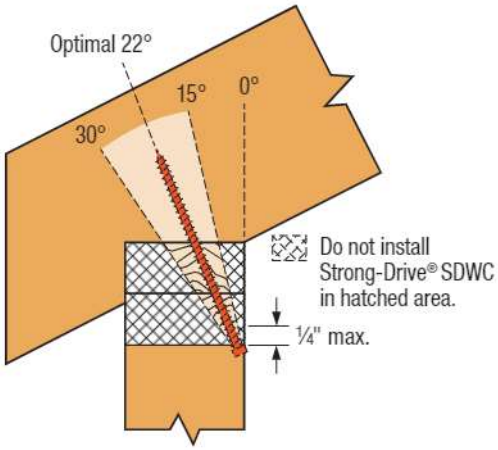

Installation Angle Limit

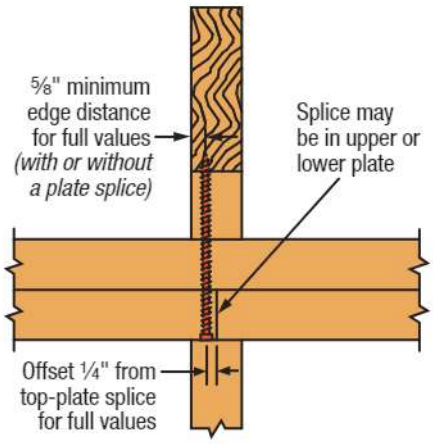

Minimum Edge Distance for Top-Plate Splice

C-F-2023TECHSUP © 2023 Simpson Strong-Tie Company Inc.

Quik Stik™
Installation Instructions (cont.)

Installation Instructions 5 — Rafter/Truss Aligned with Stud: Fasten from Corner of Stud

These instructions apply if the rafter/truss is aligned with the stud below, and the installation of the screw is from the corner where the stud meets the top plate below the rafter/truss. The configuration would be similar to that of Installations 2 and 3.

Installation Steps: Position Quik Stik so the positioning prongs straddle the front corner where the stud meets the top plate. Ensure the centerline guide is pointed at the center of the rafter/truss.

Align the angle guide with the vertical edge of the stud (or if using the bubble level, the bubble should appear in the level's window).

Drive the SDWC Truss screw through the top plates and into the rafter/truss until the screw head is flush with the bottom of the top plate.

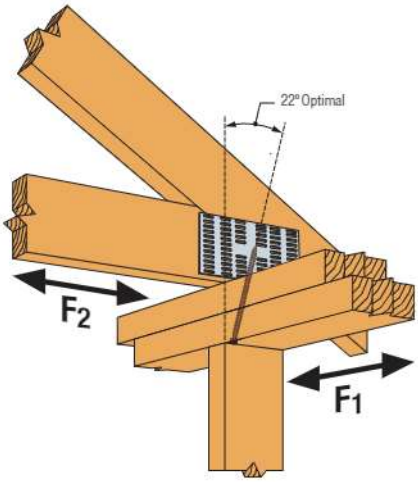

Optional SDWC Truss Screw Installation — Truss Aligned with Stud
(rafter aligned with stud similar)

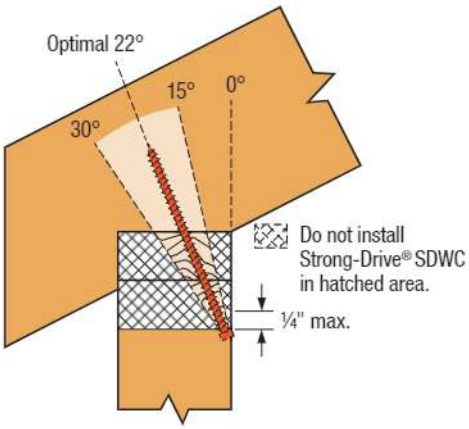

Installation Angle Limit
(side view)

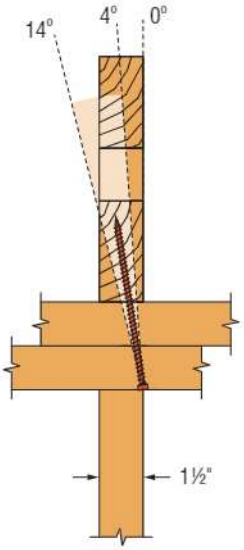

Installation Angle Limit
(front view)

C-F-2023TECHSUP © 2023 Simpson Strong-Tie Company Inc.

Quik Stik™ Installation Instructions (cont.)

Installation Instructions 6 — Rafter/Truss Gable End Installation

These instructions apply to gable end-to-top-plate connections.

Installation Steps: Position the Quik Stik head directly under the top plate so that the screw is pointing toward the centerline of the gable end.

Ensure the Quik Stik guide is vertically perpendicular to the top plate.

Drive the SDWC Truss screw straight up through the top plates and into the gable end until the head is flush with the board's face.

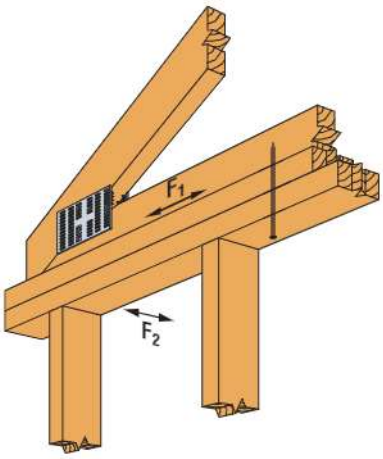

Optional SDWC Installation — Gable End Truss Offset from Stud

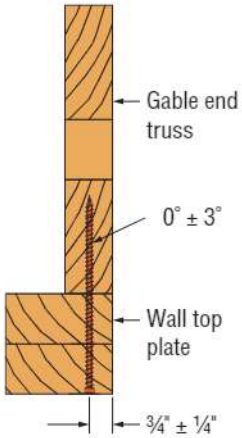

Allowable Installation Range

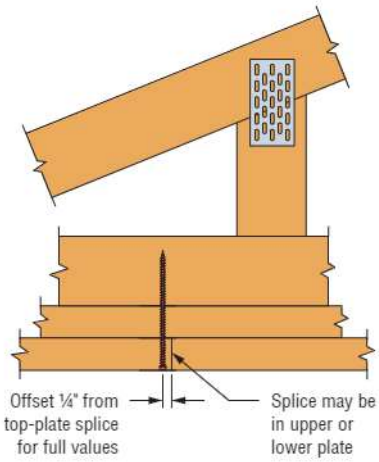

Minimum Edge for Top-Plate Splice

C-F-2023TECHSUP © 2023 Simpson Strong-Tie Company Inc.

Strong-Drive® SDPW DEFLECTOR Screw

For Non-Load-Bearing Wall Top of Wall Connection

The SDPW DEFLECTOR screws are designed to provide lateral support to full height non-load-bearing partition walls while providing a low friction interface between the fastener and the framing thereby preventing squeaking during differential deflection. These are structural fasteners that compensate for differential vertical deflection that can occur when the truss/joist deflects due to live loads and environmental changes between the framing above the wall and floor system to which the wall is anchored. The lateral resistance provided by the SDPW DEFLECTOR screws is generally normal to the surface of the interior non-load-bearing wall.

The SDPW DEFLECTOR screws are designed for use in interior dry-service conditions. They may be used in applications with dry service wood treatment chemicals and fire-retardant treated wood.

The SDPW DEFLECTOR screws are made from heat-treated carbon steel and coated with an E-coat® for corrosion resistance. They are manufactured under an approved quality system. SDPW DEFLECTOR screws come preassembled with color-coded polymer sleeves, which serve as a visual indicator for screw length.

Code/Standards: IAPMO UES ER-192 (including City of LA Supplement)

For more information, see p. 105, C-F-2023 *Fastening Systems* catalog

SDPW DEFLECTOR Screw Dimensions

Model No.	Screws		Sleeves	
	Length (in.)	Thread Length (in.)	Length (in.)	Color
SDPW14312	3.5	2	1.5	Blue
SDPW14500	5.0	2	3.0	Orange
SDPW19600	6.0	3	3.0	Gray

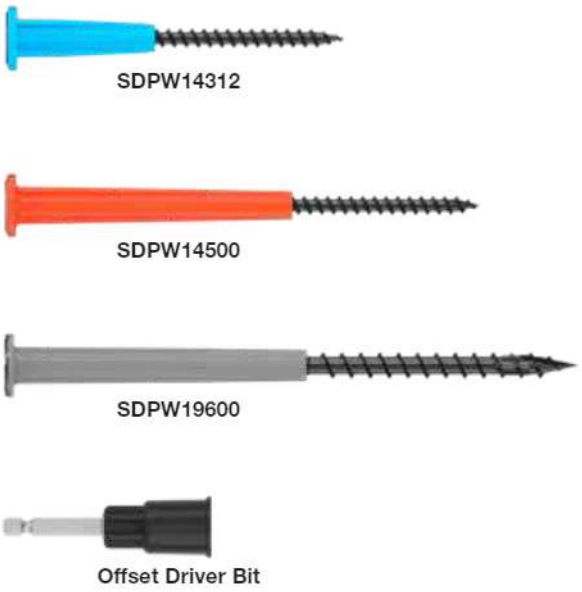

SDPW DEFLECTOR Screws and Offset Driver Bit

C-F-2023TECHSUP © 2023 Simpson Strong-Tie Company Inc.

Strong-Drive®
SDPW **DEFLECTOR** Screw (cont.)

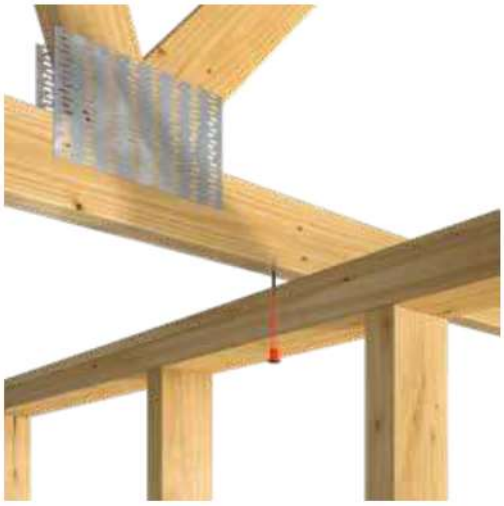

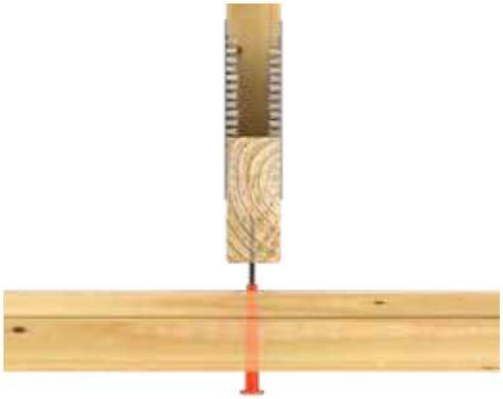

Typical Installation of SDPW DEFLECTOR Screws

A non-load-bearing wood stud wall is defined by the IBC as any wall that supports less than 100 lb./ft. of vertical load in addition to its self-weight. The SDPW DEFLECTOR screws fasten full-height non-load-bearing partition walls with wood framing in compliance with the IBC and IRC at the top of the wall to supporting wood or wood-based members. The supporting members may be dimension lumber, trusses, I-joists, glulam, structural composite lumber, or cross-laminated timber (CLT). The supporting members at a minimum shall be representative of a wood species combination with an assigned specific gravity of 0.42 or equivalent specific gravity of 0.42. The supporting members shall be equal to or thicker than the minimum penetration length.

Partition walls oriented perpendicular to the supporting framing members shall be fastened directly to the supporting framing members. For a partition wall oriented parallel to and between the overhead framing members, the partition wall shall be fastened to blocking that is installed and fastened as prescribed in the applicable building code.

Installation of the SDPW DEFLECTOR screw requires a predrilled ⅜" hole in the top plate. The supporting member shall not be predrilled. The polymer sleeve shall not penetrate the supporting member.

The SDPW DEFLECTOR screw is preferably installed using the offset driver bit that positions the screw with a ¾" offset (distance between the bottom of the screw head and the lower surface of the top plate). The ¾" offset allows for differential movements in upward and downward directions. Some construction conditions may require a 0" offset that can be achieved with or without the offset driver bit.

The gap (space between the top surface of the top plate and the lower surface of the supporting members) minimizes the potential for the partition wall to be loaded by differential movements of the overhead supporting member and the floor. A 0" gap may result in unintended loading of the partition wall, while the maximum gap is limited by top-plate thickness and screw length.

Minimum penetration into the supporting member shall be not less than ½" for the SDPW14312 and SDPW14500. Minimum penetration into the supporting member for the SDPW19600 shall be not less than ¾". Penetration length into the supporting member includes the point. Allowable loads and spacing for the SDPW19600 may be used for the double 2x top plate and thinner top plates that comply with the building codes. The allowable loads and spacing for the SDPW14500 may be used for the built-up top plate (maximum thickness 2¼") as well as the single nominal 2x top plate.

C-F-2023TECHSUP © 2023 Simpson Strong-Tie Company Inc.

Strong-Drive® SDPW DEFLECTOR Screw (cont.)

Allowable Lateral Loads (F_1 and F_2) for SDPW DEFLECTOR Screws That Connect a Non-Load-Bearing Partition Wall and the Supporting Member

Model No.	Top Plate	Allowable Lateral Load (lb.), SPF/DFL/SP (C_D = 1.6)							
		Offset = 0"				Offset = ¾"			
		Gap				Gap			
		0"	½"	¾"	1½"	0"	½"	¾"	1½"
SDPW14312	2x	220	145	145	NA	220	100	NA	NA
SDPW14500	2x +¾" WSP	180	140	140	140	180	105	80	45
SDPW19600	(2) 2x	295	205	165	75	295	205	165	75

1. Allowable lateral load was calculated based on a safety factor of 5.0. Loads were increased for wind and earthquake (C_D = 1.6); no further increases allowed. Reduce when other loads govern.
2. Per section of 1607.16 of IBC-2021, interior walls and partitions at least 6-ft in height must resist a horizontal load of 5 psf. Screw spacing shall be determined by a designer.
3. I-Joist shall shall have minimum flange thickness of 1⅛".
4. The SDPW DEFLECTOR screw is preferably driven with Simpson Strong-Tie offset driver bit for the ¾-in. offset installation.
5. The partition wall top-plate-to-stud and top-plate splice connections shall be fastened per applicable building code.
6. A 0" gap may result in load transfer into walls not designed to be load-bearing.
7. Cells with "NA" represent conditions that should not be built using the SDPW14312 Deflector screws.
8. Visit **strongtie.com/drawings** and search for SDPW Detail Sheet for typical application sheets and load tables in DWG, PDF or DXF format.
9. F_1 is a force parallel to the top plate; F_2 is a force perpendicular to the top plate.

Maximum SDPW DEFLECTOR Screw Spacing for 8-ft. and 10-ft. Tall Residential Walls

Model No.	Top Plate	On-Center Spacing (in.)							
		Offset = 0"				Offset = ¾"			
		Gap				Gap			
		0"	½"	¾"	1½"	0"	½"	¾"	1½"
SDPW14312	2x	48 / 48	48 / 48	48 / 48	NA	48 / 48	48 / 48	NA	NA
SDPW14500	2x +¾" WSP	48 / 48	48 / 48	48 / 48	48 / 48	48 / 48	48 / 48	48 / 36	24 / 18
SDPW19600	(2) 2x	48 / 48	48 / 48	48 / 48	42 / 36	48 / 48	48 / 48	48 / 48	42 / 36

1. Spacings are maximums (inches on center) based on a 5psf horizontal pressure and short duration (C_D = 1.6) allowable loads. For other durations, adjust loads and spacing.
2. In each cell: spacing (in.) for 8' tall/10' tall wall.
3. Cells with "NA" represent conditions that should not be built using the SDPW14312 Deflector screw.
4. Spacing for wall heights between 8' and 10' may be interpolated.
5. Spacing for other loads and wall heights shall be calculated using the allowable lateral loads.

C-F-2023TECHSUP © 2023 Simpson Strong-Tie Company Inc.

Sole/Top Plate-to-Rim Fastening

Strong-Drive®
SDWC TRUSS Screw

For more information, see p. 103, C-F-2023 *Fastening Systems* catalog

SDWC Truss Screw — Allowable Shear Loads for Sole-to-Rim Connections

Length (in.)	Model No.	Nominal Sole Plate Thickness (in.)	Minimum Penetration into Rim Board (in.)	Reference Allowable Loads (lb.) per Screw							
				2x DFL/SP Rim Board		2x SPF/HF Rim Board		1¼" Min. LVL Rim Board		1¼" Min. LSL Rim Board	
				DFL/SP Sole Plate	SPF/HF Sole Plate	DFL/SP Sole Plate	SPF/HF Sole Plate	DFL/SP Sole Plate	SPF/HF Sole Plate	DFL/SP Sole Plate	SPF/HF Sole Plate
4½	SDWC15450	2x	2.25	235	205	205	205	255	225	275	215
6	SDWC15600	2x, 3x, (2)-2x	2.25	235	205	205	205	255	225	275	215

1. Allowable loads are based on testing per ICC-ES AC233 and are limited to parallel-to-grain loading.
2. Allowable loads are shown at the wood load duration factor of $C_D = 1.00$. Loads may be increased for load duration by the building code up to a $C_D = 1.60$.
3. Minimum spacing of the SDWC is 6" o.c., minimum end distance is 6", and minimum edge distance is ⅝".
4. Wood structural panel up to 1⅛" thick is permitted between the sole plate and rim board provided it is fastened to the rim board per code and the minimum penetration of the screw into the rim board is met.
5. A double 2x sole plate and/or top plate is permitted provided it is independently fastened per the code and the minimum screw penetration per the table is met.
6. Minimum rim board height shall be 9¼" when using fasteners for sole plate and top plate fastening.
7. Sole-to-rim load can be achieved without a wall below.

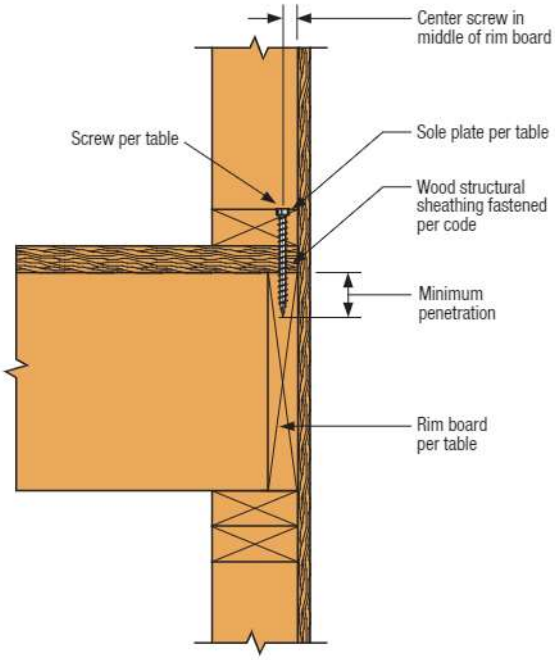

Sole-to-Rim Board Assembly
(other fasteners not shown for clarity)

C-F-2023TECHSUP © 2023 Simpson Strong-Tie Company Inc.

Strong-Drive® SDWV SOLE-TO-RIM Screw

Sole-to-Rim Attachment

The Simpson Strong-Tie SDWV Sole-to-Rim structural wood screws may be used to attach a sole plate to a rim board according to the following table. The SDWV Sole-to-Rim screw coating is intended for dry service, low-corrosion applications and is suitable for use with FRT in dry-service conditions.

Features:

- Large 0.400"-diameter head for increased holding power
- Fast start point with helical ridge for fast, easy, low-torque installation
- Variable thread design, optimized for 2x nominal dimension lumber

Code/Standards: IAPMO UES ER-192 (including City of LA Supplement), State of Florida FL13975

For more information, see p. 107, C-F-2023 *Fastening Systems* catalog

SDWV Sole-to-Rim Screw — Allowable Shear Loads for Sole-to-Rim Connection

Length (in.)	Model No.	Nominal Sole Plate Thickness (in.)	Minimum Penetration into Rim Board (in.)	Reference Allowable Loads (lb.) per Screw							
				2x Min. DFL/SP Rim Board		2x Min. SPF/HF Rim Board		1¼" Min. LVL Rim Board		1¼" Min. LSL Rim Board	
				DFL/SP Sole Plate	SPF/HF Sole Plate	DFL/SP Sole Plate	SPF/HF Sole Plate	DFL/SP Sole Plate	SPF/HF Sole Plate	DFL/SP Sole Plate	SPF/HF Sole Plate
4	SDWV13400	2x	1.75	220	175	165	160	185	165	185	175

1. Allowable loads are based on testing per ICC-ES AC233 and are limited to parallel-to-grain loading. The equivalent specific gravity for the LVL and LSL having a minimum 0.8E designation for edge fastening is 0.50.
2. Allowable loads are shown at the wood load duration factor of C_D = 1.00. Loads may be increased for load duration a permitted by the building code up to a C_D = 1.60.
3. Minimum spacing of the SDWV is 6" o.c., minimum end distance is 6", and minimum edge distance is ⅝".
4. Wood structural panel up to 23/32" thick is permitted between the sole plate and rim board provided it is fastened to the rim board per code and the minimum penetration of the screw into the rim board is met.
5. Minimum rim board height shall be 9¼" when fastening a sole plate and a single top plate to the rim board with SDWV screws.
6. Sole-to-rim loads can be achieved without a wall below.

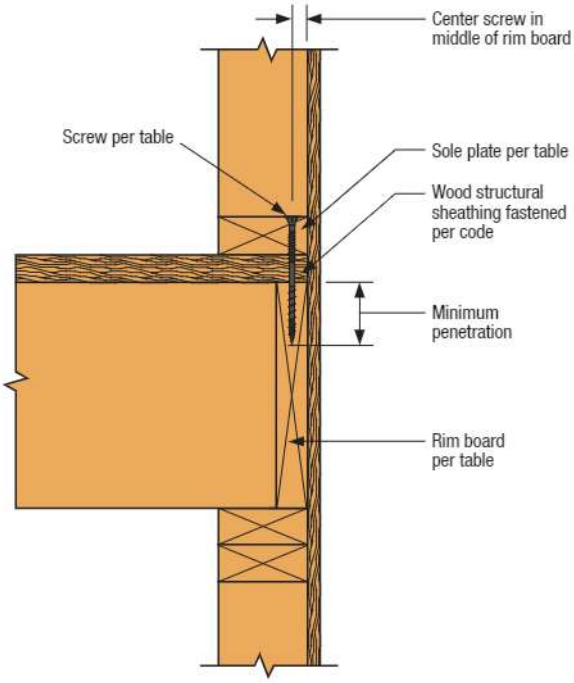

Sole-to-Rim Board Assembly
(other fasteners not shown for clarity)

C-F-2023TECHSUP © 2023 Simpson Strong-Tie Company Inc.

Strong-Drive®
SDWS TIMBER Screw

Sole-to-Rim Connections

For more information, see p. 59, C-F-2023 *Fastening Systems* catalog

SDWS Timber Screw — Allowable Shear Loads for Sole-to-Rim Connections

Length (in.)	Model No.	Nominal Sole Plate Thickness (in.)	Minimum Penetration into Rim Board (in.)	Reference Allowable Loads (lb.) per Screw							
				2x DFL/SP Rim Board		2x SPF/HF Rim Board		1¼" Min. LVL Rim Board		1¼" Min. LSL Rim Board	
				DFL/SP Sole Plate	SPF/HF Sole Plate	DFL/SP Sole Plate	SPF/HF Sole Plate	DFL/SP Sole Plate	SPF/HF Sole Plate	DFL/SP Sole Plate	SPF/HF Sole Plate
4	SDWS22400DB/ SDWS22400	2x	1.75	345	295	295	295	275	275	275	275
5	SDWS22500DB/ SDWS22500	2x	2	345	295	295	295	275	275	275	275
6	SDWS22600DB/ SDWS22600	2x, 3x, (2)-2x	2	345	295	295	295	275	275	275	275

1. Allowable loads are based on testing per ICC-ES AC233 and are limited to parallel-to-grain loading.
2. Allowable loads are shown at the wood load duration factor of C_D = 1.00. Loads may be increased for load duration by the building code up to a C_D = 1.60.
3. Minimum spacing of the SDWS is 6" o.c., minimum end distance is 6", and minimum edge distance is ⅝".
4. Wood structural panel up to 1⅛" thick (23/32" for SDWS22400DB) is permitted between the sole plate and rim board provided it is fastened to the rim board per code and the minimum penetration of the screw into the rim board is met.
5. A double 2x sole plate/top plate is permitted provided it is independently fastened per the code and the minimum screw penetration per the table is met.
6. Minimum rim board height shall be 9¼" when using SDWS screws for sole and top plate fastening.
7. Sole-to-rim loads can be achieved without a wall below.

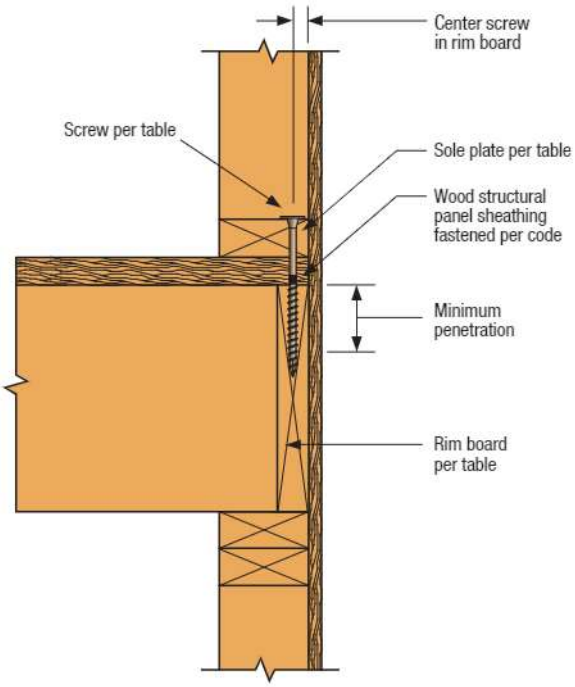

Sole-to-Rim Board Assembly
(other fasteners not shown for clarity)

C-F-2023TECHSUP © 2023 Simpson Strong-Tie Company Inc.

Sole / Top Plate-to-Rim Fastening

SIMPSON Strong-Tie

Strong-Drive®
SDWH TIMBER-HEX Screw

Sole-to-Rim Connections

For more information, see p. 61, C-F-2023 *Fastening Systems* catalog

SDWH Timber-Hex Screw — Allowable Shear Loads for Sole-to-Rim Connections

Length (in.)	Model No.	Nominal Sole Plate Thickness (in.)	Minimum Penetration into Rim Board (in.)	Reference Allowable Loads (lb.) per Screw							
				2x DFL/SP Rim Board		2x SPF/HF Rim Board		1¼" Min. LVL Rim Board		1¼" Min. LSL Rim Board	
				DFL/SP Sole Plate	SPF/HF Sole Plate	DFL/SP Sole Plate	SPF/HF Sole Plate	DFL/SP Sole Plate	SPF/HF Sole Plate	DFL/SP Sole Plate	SPF/HF Sole Plate
4	SDWH19400DB	2x	1.75	315	295	295	295	255	255	275	275
6	SDWH19600DB	2x, 3x, (2)-2x	2	315	295	295	295	255	255	275	275

1. Allowable loads are based on testing per ICC-ES AC233 and are limited to parallel-to-grain loading.
2. Allowable loads are shown at the wood load duration factor of C_D = 1.00. Loads may be increased for load duration by the building code up to a C_D = 1.60.
3. Minimum spacing of the SDWH is 6" o.c., minimum end distance is 6", and minimum edge distance is ⅝".
4. Wood structural panel up to 1⅛" thick is permitted between the sole plate and rim board provided it is fastened to the rim board per code and the minimum penetration of the screw into the rim board is met.
5. A double 2x sole/top plate is permitted provided it is independently fastened per the code and the minimum screw penetration per the table is met.
6. Minimum rim board height shall be 9¼" when using SDWH fasteners for sole and top plate fastening.
7. Sole-to-rim loads can be achieved with a wall below.

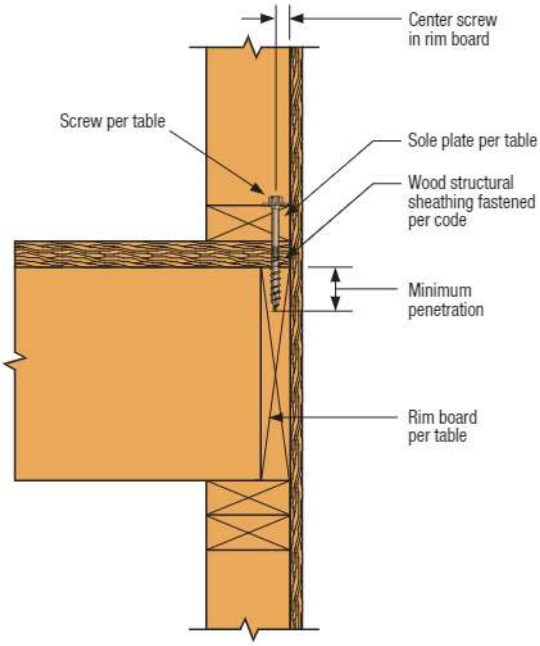

Sole-to-Rim Board Assembly
(other fasteners not shown for clarity)

C-F-2023TECHSUP © 2023 Simpson Strong-Tie Company Inc.

Strong-Drive®
SDWS **TIMBER** Screw and SDWH **TIMBER-HEX** Screw

Sole Plate/Top Plate to Rim/Blocking Shear Load Transfer with Reduced Fastener Spacing

Strong-Drive SDWS Timber and Strong-Drive SDWH Timber-Hex structural screws may be used to attach a sole plate or top plate to a rim board and blocking material according to the following details and loading information. Allowable loads are based on testing per ICC-ES AC233 and are limited to parallel-to-grain or in-plane shear loading. Each test assembly consisted of multiple fasteners, a sole plate, sheathing and a rim board or blocking material. Please see the following for allowable load tables.

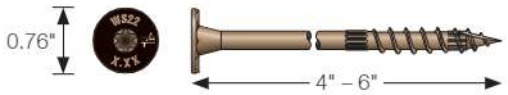

Strong-Drive SDWS TIMBER Screw

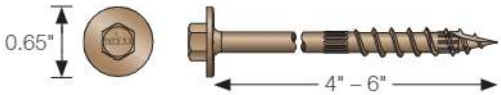

Strong-Drive SDWH TIMBER-HEX Screw

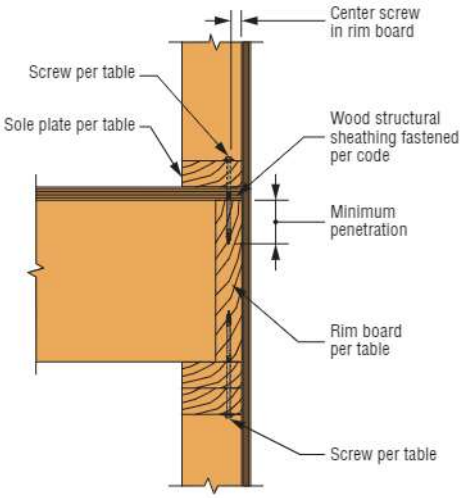

Sole-to-Rim and Top Plate-to-Rim Connection

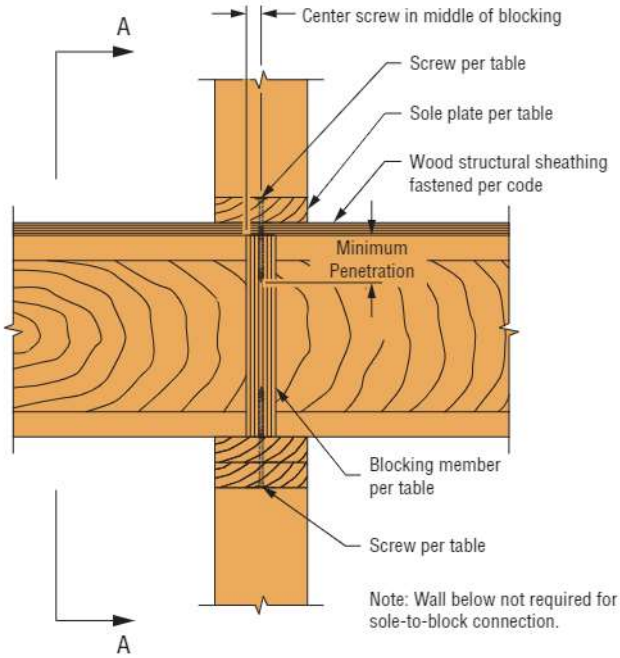

Sole-to-Block and Top Plate-to-Block Connection

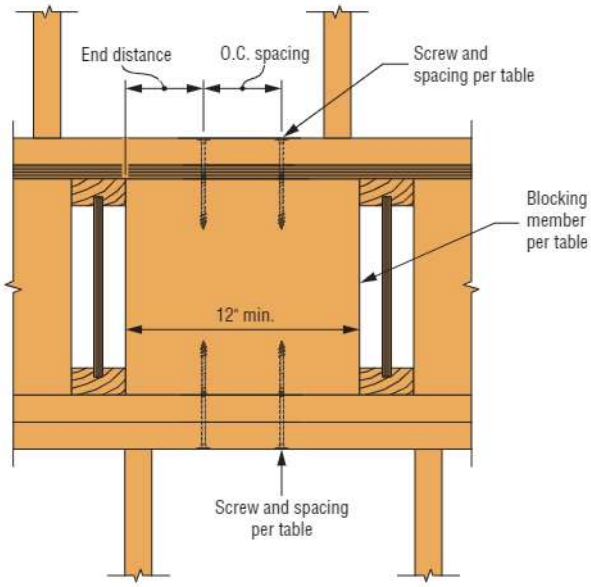

Sole-to-Block and Top Plate-to-Block Connection

C-F-2023TECHSUP © 2023 Simpson Strong-Tie Company Inc.

Strong-Drive®
SDWS TIMBER Screw and SDWH TIMBER-HEX Screw (cont.)

SDWS TIMBER Screw and SDWH TIMBER-HEX Screw — Single Fastener Connection, Allowable Shear Loads for Sole-to-Rim (or Blocking) and Top Plate-to-Rim (or Blocking)

Min. Screw Length (in.)	Nominal Sole Plate or Top Plate Thickness		Model No.	Min. Penetration into Rim or Block (in.)	Reference Allowable Shear Loads (lb.) per Screw DFL/SP Sole Plate and Top Plate					
					Rim and Blocking Material					
					2x Min. DFL/SP		1¼" Min. LVL	1¾" Min. LVL	1¼" Min. LSL	1¾" Min. LSL
					6" O.C. 6" End Distance	3" O.C. 3" End Distance	6" O.C. 6" End Distance	4" O.C. 4" End Distance	6" O.C. 6" End Distance	4" O.C. 4" End Distance
4	Sole Plate	2x	SDWH19400DB	1.75	315	220	255	260	275	230
4		2x	SDWS22400DB	1.75	345	240	275	305	275	350
5		2x	SDWS22500DB	2	345	240	275	360	275	345
6		3x	SDWH19600DB	2	315	225	255	260	275	230
6		3x	SDWS22600DB	2	345	240	275	360	275	345
6		(2) 2x	SDWH19600DB	1.75	315	220	255	260	275	230
6		(2) 2x	SDWS22600DB	1.75	345	240	275	305	275	350
8		(2) 2x	SDWH19800DB	2	315	225	255	260	275	230
8		(2) 2x	SDWS22800DB	2	345	240	275	360	275	345
5	Top Plate	(2) 2x	SDWS22500DB	2	345	240	275	360	275	345
6		(2) 2x	SDWH19600DB	2	315	225	255	260	275	230
6		(2) 2x	SDWS22600DB	2	345	240	275	360	275	345

1. Allowable loads are shown at the wood load duration factor of C_D = 1.00. Loads may be increased for load duration by the building code up to a C_D = 1.60.
2. For 2x solid sawn members and 1¼" LVL or LSL members the minimum edge distance is ⅝". For 1¾" LVL or LSL members the minimum edge distance is ⅞".
3. Wood structural panel up to 1⅛" thick (23/32 for 4" fasteners) is permitted between sole plate and rim board provided it is fastened to the rim board per code and the minimum penetration of the screw into the rim/block is met.
4. Double sole plate and top plate fastened minimum per code.
5. Minimum rim height is 9¼" when using fasteners on the top and bottom. Sole to blocking loads can be achieved with or without a wall below.
6. For assemblies using SPF/HF lumber for the sole plate, top plate, or rim/blocking members, multiply table values by 0.86.

Spacing for Multiple Rows of Fasteners

Material	O.C. Spacing/ End Distance Spacing (in.)	Row Offset (in.)	Row Stagger (in.)
Solid Sawn	3	1¼	1¼
	6		
LVL or LSL	4	1¾	1¾
	6	1¼	1¼

1. The material must be wide enough to accommodate minimum edge distance, row offset and row stagger.

C-F-2023TECHSUP © 2023 Simpson Strong-Tie Company Inc.

Strong-Drive®
SDS HEAVY-DUTY CONNECTOR Screw

For more information, see p. 68, C-F-2023 *Fastening Systems* catalog

SDS Heavy-Duty Connector Screw — Allowable Shear Values for Sole-to-Rim Connections

Length (in.)	Model No.	Nominal Sole Plate Thickness (in.)	Minimum Penetration into Rim Board (in.)	Reference Allowable Loads (lb.)							
				2x DFL/SP Rim Board		2x SPF/HF Rim Board		1¾" Min. LVL Rim Board		1¾" Min. LSL Rim Board	
				DFL/SP Sole Plate	SPF/HF Sole Plate	DFL/SP Sole Plate	SPF/HF Sole Plate	DFL/SP Sole Plate	SPF/HF Sole Plate	DFL/SP Sole Plate	SPF/HF Sole Plate
4.5	SDS25412	2x	2	250	190	190	190	190	190	220	190
5	SDS25500	2x	2	250	190	190	190	190	190	220	190
6	SDS25600	2x, 3x, (2)-2x	2	250	190	190	190	190	190	220	190

1. Allowable loads are based on testing per ICC-ES AC233 and are limited to parallel-to-grain loading.
2. Allowable loads are shown at the wood load duration factor of $C_D = 1.00$. Loads may be increased for load duration by the building code up to a $C_D = 1.60$.
3. Minimum spacing of the SDS for sawn lumber applications is 3" o.c., minimum end distance is 3", and minimum edge distance is ⅝".
4. Minimum spacing of the SDS for LVL and LSL applications is 6" o.c., minimum end distance is 6", and minimum edge distance is ⅝".
5. Wood structural panel up to 1⅛" thick is permitted between the sole plate and rim board provided it is fastened to the rim board per code and the minimum penetration of the screw into the rim board is met.
6. A double 2x sole/top plate is permitted provided it is independently fastened per the code and the minimum screw penetration per the table is met.
7. Minimum rim board height shall be 9¼" when using SDS screws for sole and top plate fastening.
8. Sole-to-rim loads can be achieved without a wall below.

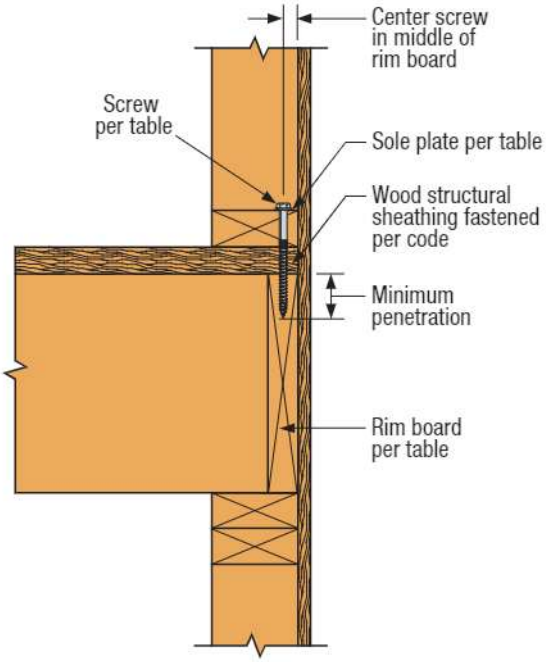

Sole-to-Rim Board Assembly
(Other fasteners not shown for clarity)

C-F-2023TECHSUP © 2023 Simpson Strong-Tie Company Inc.

Strong-Drive®
SDWF **FLOOR-TO-FLOOR** Screw

Wind-Uplift Restraint Connections with Shrinkage Compensation

Features:

- The take-up washer (TUW) allows for shrinkage compensation ensuring a tight connection even after initial shrinkage and settlement occur
- One screw length can be used for multiple floor depths (refer to chart to select appropriate screw size), reducing the need for many screw lengths

Codes/Standards: ICC-ES ESR-3046 (SDWF), ICC-ES ESR-2320 (TUW), State of Florida FL9589, FL10007 (TUW)

US Patents 8,656,650, 8,844,244 and 8,276,323

For more information, see p. 106, C-F-2023 *Fastening Systems* catalog

Additional Installation Considerations:

- To choose the appropriate SDWF screw length, see top table on next page
- The SDWF screw installs best with a high torque, ½" variable speed drill (at least 18V if cordless) with a 5⁄16" hex-head driver (hex driver provided)
- See details for minimum edge/end fastener distances

Installation Instructions for the Strong-Drive SDWF Floor-to-Floor Screw and Take-Up Washer (TUW)

To Install:

1. a) Drive the SDWF screw vertically (90°±2°) into the center of the upper-wall bottom plate.
   b) Once the SDWF screw has passed through upper-wall bottom plate and floor sheathing, make sure the screw is still vertical (90°±2°) prior to driving it into lower-wall double top plate. Adjust if necessary.
   c) Continue driving the SDWF screw until the head is a minimum of 2" above the upper-wall bottom plate.

2. Slide the TUW (provided) over the SDWF screw head and center using locator tab as a reference. Orient locator tab so that it points toward the outside of the wall.

1.a

1.b

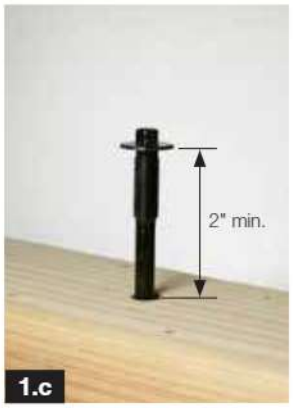

1.c

2

3. Secure the TUW to the upper-wall bottom plate with (4) #9 x 2½" Simpson Strong-Tie® Strong-Drive SD screws (provided).

4. Continue driving the SDWF screw until the washer head contacts the threaded TUW tabs and bends them until they engage the shank of the SDWF screw directly under the head. Do not overdrive.

5. Check to ensure the proper engagement of the TUW tabs to the SDWF screw shank using the screw depth guide (provided). The measured gap shall be no greater than 9⁄32" and no less than 5⁄32".

3

4

5

C-F-2023TECHSUP © 2023 Simpson Strong-Tie Company Inc.

Strong-Drive®
SDWF **FLOOR-TO-FLOOR** Screw Installation Conditions

Product Information and Withdrawal Loads

Length (in.)	Model No.	Thread Length (in.)	Joist Depth Below (in.)				Reference Allowable Withdrawal Loads per Thread Penetration (lb./in.)		
			Single Bottom Plate		Double Bottom Plate				
			Min.	Max.	Min.	Max.	SP	DFL	SPF
16	SDWF2716-TUW	5	8½	10½	6⅞	9	295	250	180
20	SDWF2720-TUW	5	12½	14½	10⅞	13			
24	SDWF2724-TUW	5	16½	18½	14⅞	17			
26	SDWF2726-TUW	5	18½	20½	16⅞	19			
30	SDWF2730-TUW	5	22½	24½	20⅞	23			

1. Allowable loads are for C_D = 1.0 and may be increased for load duration up to C_D = 1.6.
2. Joist depth listed based on the ¾" subfloor and 3" of thread penetration into double top plates.

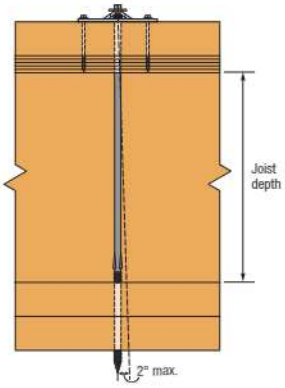

Typical SDWF Angle Limit Installation

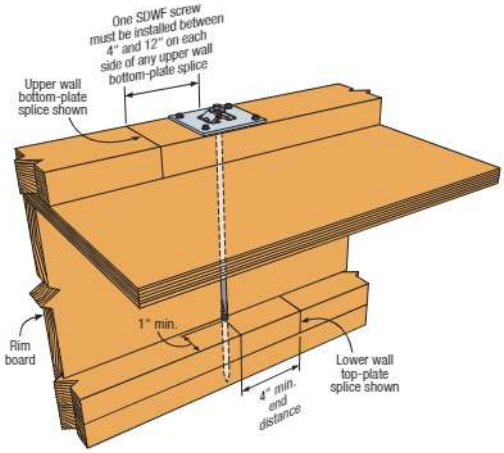

Typical SDWF and TUW Installation

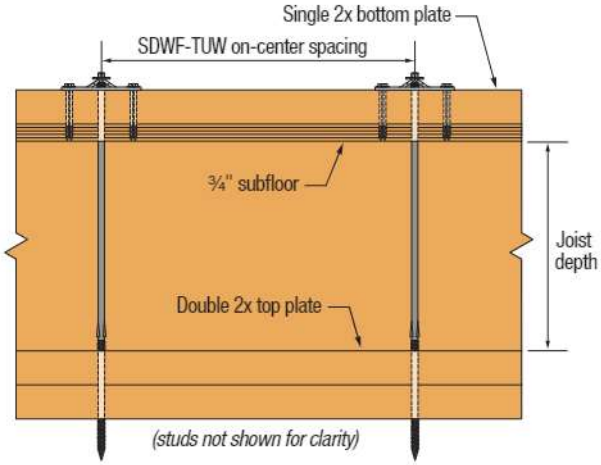

SDWF-TUW Assembly

SDWF-TUW Floor-to-Floor Screw — On-Center Spacing for Uniform Uplift Loads

Maximum SDWF Screw Spacing (in.) Along Wall Bottom Plate for Wind Uplift											
Bottom Plate	Interstory Unit Wind Uplift, Pounds per Lineal Foot (plf)										
Single 2x4	100 plf	150 plf	200 plf	250 plf	300 plf	350 plf	400 plf	450 plf	500 plf	550 plf	600 plf
SP	46	40	36	34	30	28	26	24	24	22	22
DFL	48	42	38	34	32	30	30	26	24	22	20
SPF	46	40	36	34	32	30	26	22	20	18	16
Single 2x6	100 plf	150 plf	200 plf	250 plf	300 plf	350 plf	400 plf	450 plf	500 plf	550 plf	600 plf
SP	56	48	44	40	38	36	34	34	32	30	28
DFL	56	48	44	40	38	34	30	26	24	22	20
SPF	52	46	42	38	34	30	26	22	20	18	16

1. Spacing listed based on lesser of: single bottom plate bending allowable load, single bottom plate deflection limited to spacing/240 and ¼" maximum for No. 2 grade lumber, screw allowable withdrawal load, and take-up washer allowable load.
2. Withdrawal load is based on a C_D = 1.6 and minimum 3" penetration into lower wall double top plates.
3. Stud-to-plate connections are required to complete the load path. These connections shall not exceed the lesser of 48" o.c. or SDWF spacing.

C-F-2023TECHSUP © 2023 Simpson Strong-Tie Company Inc.

Strong-Drive®
SDWF **FLOOR-TO-FLOOR** Screw Installation Conditions (cont.)

Concentrated Uplift Loads

Model No.	Single SDWF-TUW				Double SDWF-TUW			
	Allowable Tension Loads (lb.)			Deflection at Highest Allowable Loads (in.)	Allowable Tension Loads (lb.)			Deflection at Highest Allowable Loads (in.)
	SP	DFL	SPF		SP	DFL	SPF	
SDWF2716-TUW	1,410	1,200	865	0.095	2,270	2,125	1,730	0.142
SDWF2720-TUW								
SDWF2724-TUW								
SDWF2726-TUW								
SDWF2730-TUW								

1. Allowable loads listed include a wood load duration factor of C_D = 1.6 for wind or earthquake loading with no further increase allowed; reduce when other loads govern.
2. Single and double SDWF-TUW applications listed are for concentrated load uplift restraint conditions (i.e., end of header, at girders, or at the end of shearwalls).

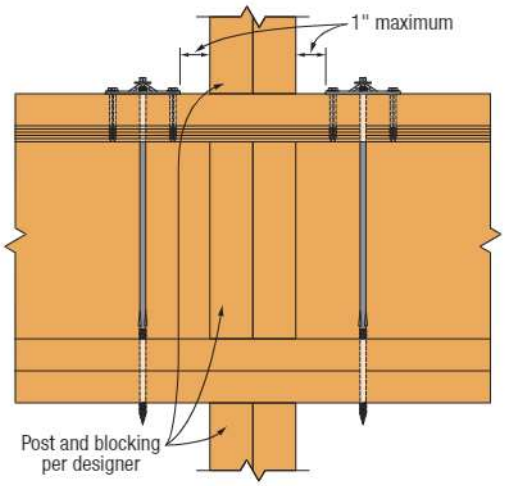

Double SDWF-TUW Concentrated Load Restraint Detail at Continuous Wall
(single SDWF-TUW similar)

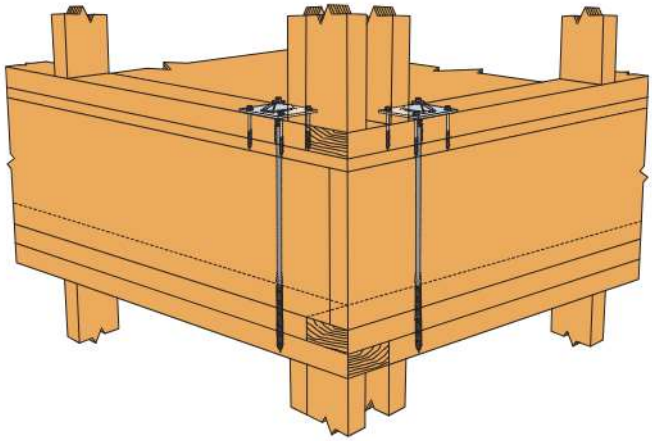

Perspective View of Corner Conditions with Double SDWF-TUW
(single SDWF-TUW similar)

Note: Stud-to-plate connections are required to complete the load path and are the responsibility of the designer. SDWF not to replace holdowns in shearwall applications.

Web App Enables Designers to Calculate Wood Shrinkage Easier

The Simpson Strong-Tie® Wood Shrinkage Calculator is a quick and easy web app to estimate the amount of shrinkage the structure may experience as the wood member loses moisture content after it is framed and in service. The calculator estimates the shrinkage of each wood member in the wall and floor framing assembly and provides a graphical summary to help understand the global impact of shrinkage of individual elements in the wall system. To access this free application, visit **strongtie.com/shrinkcalc**.

C-F-2023TECHSUP © 2023 Simpson Strong-Tie Company Inc.

Strong-Drive® SDWF FLOOR-TO-FLOOR Screw Installation Conditions (cont.)

Alternate Floor Joist Depths

The SDWF Floor-to-Floor screw is available in lengths of 16", 20", 24", 26" and 30". These lengths allow for full 3" thread penetration into the double top plates to accommodate a wide range of floor depths. The tables below and on the following page provide allowable withdrawal loads and SDWF spacing for common floor depths which results in reduced thread penetration and additional on-center spacing to resist uniform uplift loads.

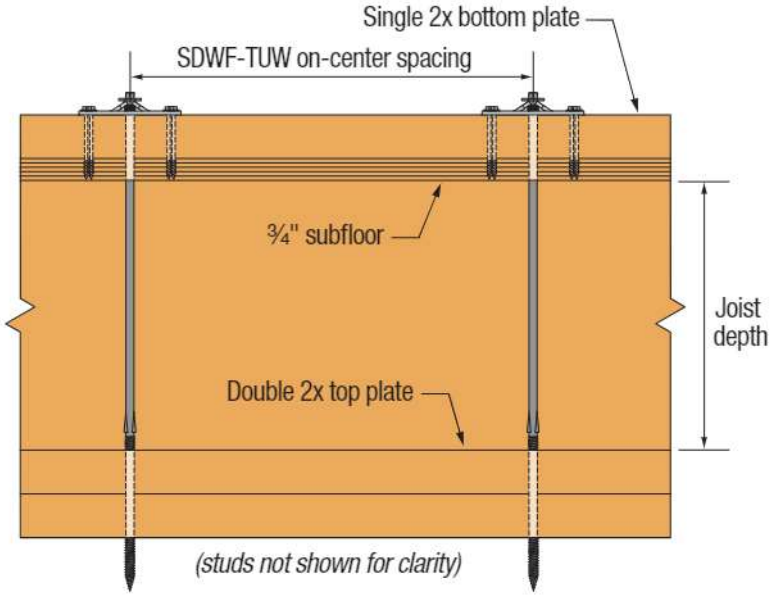

SDWF-TUW Assembly

SDWF FLOOR-TO-FLOOR Screw — On-Center Spacing for Uniform Uplift Loads with SINGLE Bottom Plates

Joist Depth (in.)	Model No.	Wall Plate Species	Withdrawal[2] per SDWF (lb.)	Maximum SDWF Screw Spacing (in.) Along Wall Bottom Plate for Wind Uplift — Interstory Unit Wind Uplift Loads (lb. per Lineal Foot)										
				100	150	200	250	300	350	400	450	500	550	600
11¼[4]	SDWF2716-TUW	**Single 2x4 Bottom Plate**												
		SP	740	46	40	36	34	30	25	22	20	18	16	15
		DF	630	48	42	38	30	25	22	19	17	15	14	13
		SPF	450	46	36	27	22	18	16	14	12	11	10	9
		Single 2x6 Bottom Plate												
		SP	740	56	48	44	36	30	25	22	20	18	16	15
		DF	630	56	48	38	30	25	22	19	17	15	14	13
		SPF	450	52	36	27	22	18	16	14	12	11	10	9

See footnotes on p. 118.

C-F-2023TECHSUP © 2023 Simpson Strong-Tie Company Inc.

Strong-Drive®
SDWF **FLOOR-TO-FLOOR** Screw Installation Conditions (cont.)

SDWF FLOOR-TO-FLOOR Screw — On-Center Spacing for Uniform Uplift Loads with SINGLE Bottom Plates (cont.)

Joist Depth (in.)	Model No.	Wall Plate Species	Withdrawal[2] per SDWF (lb.)	Maximum SDWF Screw Spacing (in.) Along Wall Bottom Plate for Wind Uplift — Interstory Unit Wind Uplift (lb. per Lineal Foot)										
				100	150	200	250	300	350	400	450	500	550	600
11⅞	SDWF2720-TUW	**Single 2x4 Bottom Plate**												
		SP	1,410	46	40	36	34	30	30	26	24	24	22	22
		DF	965	48	42	38	34	32	30	29	26	23	21	19
		SPF	695	46	40	36	33	28	24	21	19	17	15	14
		Single 2x6 Bottom Plate												
		SP	1,140	56	48	44	40	38	36	34	30	27	25	23
		DF	965	56	48	44	40	38	33	29	26	23	21	19
		SPF	695	52	46	42	33	28	24	21	19	17	15	14
16	SDWF2724-TUW	**Single 2x4 Bottom Plate**												
		SP	1,195	46	40	36	34	30	30	26	24	24	22	22
		DF	1,015	48	42	38	34	32	30	30	26	24	22	20
		SPF	730	46	40	36	34	29	25	22	19	18	16	15
		Single 2x6 Bottom Plate												
		SP	1,195	56	48	44	40	38	36	34	32	29	26	24
		DF	1,015	56	48	44	40	38	34	30	26	24	22	20
		SPF	730	52	46	42	35	29	25	22	19	18	16	15
22	SDWF2730-TUW	**Single 2x4 Bottom Plate**												
		SP	1,195	46	40	36	34	32	30	28	26	24	24	22
		DF	1,015	48	42	38	36	34	32	30	26	24	22	20
		SPF	730	46	40	36	34	28	24	22	18	18	16	14
		Single 2x6 Bottom Plate												
		SP	1,195	54	46	42	40	36	36	34	32	28	26	24
		DF	1,015	56	48	44	42	38	34	30	26	24	22	20
		SPF	730	54	46	42	34	28	24	22	18	18	16	14
24	SDWF2730-TUW	**Single 2x4 Bottom Plate**												
		SP	1,410	46	40	36	34	32	30	28	26	24	24	22
		DF	1,200	48	42	38	36	34	32	30	28	26	26	24
		SPF	865	46	40	36	34	32	30	26	22	20	18	16
		Single 2x6 Bottom Plate												
		SP	1,410	54	46	42	40	36	36	34	32	30	28	28
		DF	1,200	56	48	44	42	38	36	36	32	28	26	24
		SPF	865	54	46	42	40	34	30	26	22	20	18	16

See footnotes on next page.

C-F-2023TECHSUP © 2023 Simpson Strong-Tie Company Inc.

Strong-Drive®
SDWF **FLOOR-TO-FLOOR** Screw Installation Conditions (cont.)

SDWF FLOOR-TO-FLOOR Screw — On-Center Spacing for Uniform Uplift Loads with DOUBLE Bottom Plates and Reduced Thread Penetration

Joist Depth (in.)	Model No.	Wall Plate Species	Withdrawal per SDWF (lb.)	Maximum SDWF Screw Spacing (in.) Along Wall Bottom Plate for Wind Uplift Loads										
				Interstory Unit Wind Uplift Loads (Pounds per Lineal Foot)										
				100	150	200	250	300	350	400	450	500	550	600
22	SDWF2730-TUW	Double 2x4 Bottom Plate												
		SP	1,410	58	50	46	42	40	38	36	34	34	30	28
		DFL	1,200	60	52	48	44	42	40	36	32	28	26	24
		SPF	865	58	50	46	40	34	30	26	22	20	18	16
		Double 2x6 Bottom Plate												
		SP	1,410	66	58	54	50	46	44	42	38	34	30	28
		DFL	1,200	68	62	56	52	48	40	36	32	28	26	24
		SPF	865	66	58	52	40	34	30	26	22	20	18	16
24[4]	SDWF2730-TUW	Double 2x4 Bottom Plate												
		SP	850	58	50	46	40	34	28	24	22	20	18	16
		DFL	720	60	52	42	34	28	24	22	18	16	16	14
		SPF	515	58	40	30	24	20	18	16	14	12	10	10
		Double 2x6 Bottom Plate												
		SP	850	66	58	50	40	34	28	24	22	20	18	16
		DFL	720	68	56	42	34	28	24	22	18	16	16	14
		SPF	515	62	40	30	24	20	18	16	14	12	10	10

1. Spacing listed based on lesser of single bottom plate ending allowable load, single bottom plate deflection limited to spacing/240 and ¼" maximum for No. 2 grade lumber, screw allowable withdrawal load, and take-up washer allowable load.
2. Withdrawal load is based on a C_D =1.6; no further increase is permitted.
3. Stud-to-plate connections are required to complete the load path. These connections shall not exceed the lesser of 48" o.c. or SDWF spacing.
4. Applications with 11¼" or 24" joist depths with single or double bottom plates primarily connect to the upper 2x of the double top plate; connections securing the double top plate to the framing below must engage the upper 2x plate in order to provide a complete load path.

C-F-2023TECHSUP © 2023 Simpson Strong-Tie Company Inc.

Strong-Drive®
SDWS **TIMBER** Screw (Interior Grade) and SDWH **TIMBER-HEX HDG** Screw

Floor-to-Floor

The SDWS Timber screw (Interior Grade) (SDWS221500) and SDWH Timber-Hex HDG screw (SDWH271500G) have been evaluated as alternatives for uplift connection between floors that do not require shrinkage compensation. The application is specific to framing that consists of a single wall bottom plate, joist depth of 9.25 to 9.5 inches, and double 2x wall top plate. These screws are recognized in IAPMO UES ER-192. Typical installation and corresponding load tables for floor systems is shown in the following pages.

For more information, see p. 102 (SDWS TIMBER Screw (Interior Grade) and p. 63 (SDWH TIMBER-HEX HDG Screw), C-F-2023 *Fastening Systems* catalog.

SDWS Timber Screw (Interior Grade) (SDWS221500)

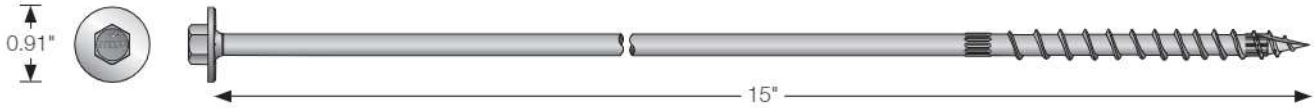

SDWH Timber-Hex HDG Screw (SDWH271500G)

Product Information and Withdrawal/Pull-Through Loads

Length (in.)	Model No.	Thread Length (in.)	Reference Allowable Withdrawal Loads per Inch of Thread Penetration (lb./in.)[1]			Reference Allowable Pull-Through Loads for 2x Plate (lb.)[1]		
			SP	DFL	SPF	SP	DFL	SPF
15	SDWS221500	3	260	215	185	800	695	495
15	SDWH271500G	3	285	255	210	880	875	695

1. Allowable loads are shown at the wood load duration factor of C_D = 1.0. Loads may be increased for load duration up to a C_D = 1.6.

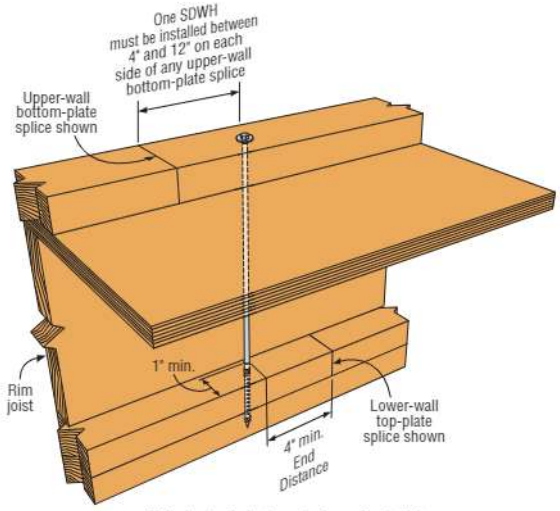

(Plate-to-rim fastening not shown for clarity)

Typical SDWH271500G Installation
(SDWS221500 Similar)

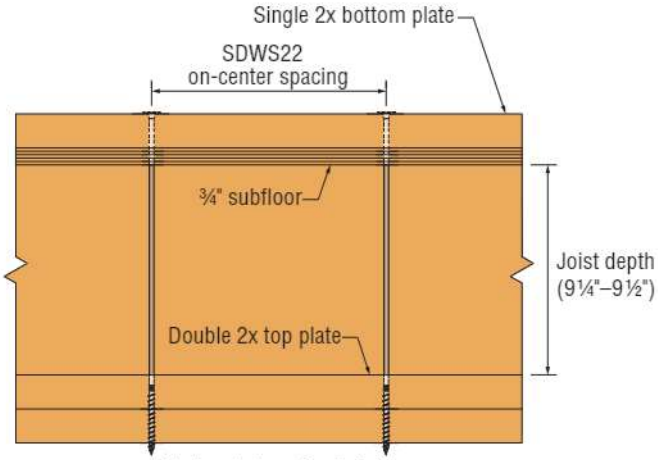

(studs not shown for clarity)

Typical SDWS221500 Spacing
(SDWH271500G Similar)

C-F-2023TECHSUP © 2023 Simpson Strong-Tie Company Inc.

Strong-Drive®
SDWS **TIMBER** Screw (Interior Grade) and SDWH **TIMBER-HEX HDG** Screw (cont.)

SDWS TIMBER Screw (Interior Grade) and SDWH TIMBER-HEX HDG Screw — On-Center Spacing for Uniform Uplift Loads

Joist Depth (in.)	Model No.	Wall Plate Species	Withdrawal per Screw (lb.)[2]	Maximum Screw Spacing (in.) Along Wall Bottom Plate for Wind Uplift — Interstory Unit Wind Uplift (Pounds per Lineal Foot)[2]										
				100 plf	150 plf	200 plf	250 plf	300 plf	350 plf	400 plf	450 plf	500 plf	550 plf	600 plf
9¼ to 9½	SDWS221500	Single 2x4 Bottom Plate												
		SP	930	46	40	36	34	32	30	28	24	22	20	18
		DFL	770	48	42	38	36	30	26	22	20	18	16	14
		SPF	675	46	40	36	32	26	22	20	18	16	14	12
		Single 2x6 Bottom Plate												
		SP	930	54	46	42	40	36	32	28	24	22	20	18
		DFL	770	56	48	44	36	30	26	22	20	18	16	14
		SPF	675	54	46	40	32	26	22	20	18	16	14	12
9¼ to 9½	SDWH271500G	Single 2x4 Bottom Plate												
		SP	1,150	46	40	36	34	32	30	28	26	24	24	22
		DFL	1,020	48	42	38	36	34	32	30	26	24	22	20
		SPF	850	46	40	36	34	32	28	24	22	20	18	16
		Single 2x6 Bottom Plate												
		SP	1,150	54	46	42	40	36	36	34	30	28	24	22
		DFL	1,020	56	48	44	42	38	34	30	26	24	22	20
		SPF	850	54	46	42	40	34	28	24	22	20	18	16

1. Spacing listed based on lesser of: single bottom plate bending allowable load, single bottom plate deflection limited to spacing/240 and ¼" maximum for No. 2 grade lumber, screw allowable withdrawal and pull-through loads.
2. Withdrawal and uplift loads are based on $C_D = 1.6$; no further increase is permitted.
3. Stud-to-plate connections and plate-to-rim connections are required to complete the load path.
4. Tabulated loads are applicable to the following minimum thread embedment length into double top plate: SDWS221500 = 2¼", SDWH271500G = 2½".

C-F-2023TECHSUP © 2023 Simpson Strong-Tie Company Inc.

Strong-Drive®
SDWS **TIMBER** Screw (Interior Grade) and SDWH **TIMBER-HEX HDG** Screw (cont.)

SDWS TIMBER (Interior Grade) Screw and SDWH TIMBER-HEX HDG Screw — Allowable Concentrated Uplift Loads

Length (in.)	Model No.	Thread Length (in.)	Single Fastener Allowable Tension Loads (lb.)			Double Fastener Allowable Tension Loads (lb.)		
			SP	DFL	SPF	SP	DFL	SPF
15	SDWS221500	3	930	770	675	1,860	1,540	1,350
15	SDWH271500G	3	1,150	1,020	850	2,240	2,040	1,700

1. Allowable loads include a wood load duration factor of C_D = 1.6 for wind and earthquake loading with no further increase allowed; reduce when other loads govern.
2. Single and double fastener applications are for concentrated-load uplift restraint conditions (i.e., end of header, at girders, or at the end of shearwalls).
3. Tabulated loads are applicable to the following minimum thread embedment into the double top plate: SDWS221500 = 2¼", SDWH271500G = 2½".

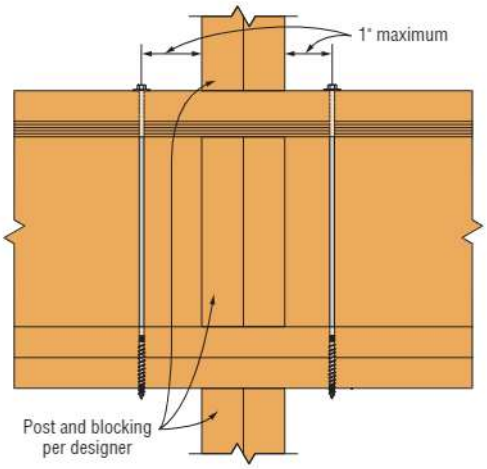

Typical Double SDWH27G or SDWS22 (similar) Concentrated Load Restraint Detail at Compression Blocking

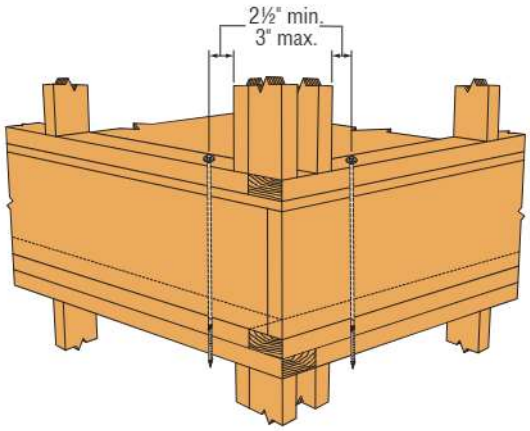

Typical Double SDWH27G or SDWS22 (similar) Concentrated Load Restraint Detail at Wall Corner

Note: Stud-to-plate connections and rim-to-plate connections are required to complete the load path and are in the responsibility of the designer. SDWS22 and SDWH27G do not replace holdowns in shearwall applications.

C-F-2023TECHSUP © 2023 Simpson Strong-Tie Company Inc.

Strong-Drive® WSV SUBFLOOR Screw

For more information, see p. 229, C-F-2023 *Fastening Systems* catalog

1 ¾"–3" WSV Fasteners Meet Code Requirements

As listed in ICC-ES ESR-1472, WSV screws meet code requirements for the 2021 and 2018 International Building Code (IBC) and International Residential Code (IRC). Evaluation report recognized uses of WSV screws include the following applications:

- Substitute for 8d and 10d common nails in horizontal diaphragms per AWC SDPWS 2021 and 2015 Tables 4.2A, 4.2B and 4.2C.
- Single, diagonally-sheathed lumber diaphragms per AWC SDPWS 2021 and 2015, Table 4.2D.
- Select code prescribed framing and sheathing connections per 2021 IBC Table 2304.10.2 and 2018/2015 IBC Table 2304.10.1.
- Select code prescribed sheathing connections per 2021/2018/2015 IRC Table R602.3(1) and in structures regulated by the IRC where the engineered design is submitted in accordance with IRC R301.1.3.

Guidelines for Fastening Diaphragms Without Glue

The design of wood floor systems constructed with wood structural panel (WSP) sheathing fastened to framing considers the diaphragm performance of the system as presented in the codes (as affected by framing, sheathing thickness, sheathing layout and fastening) and may also consider the composite action of the sheathing with the framing system for bending performance (composite action is the combined stiffness of the joist with the sheathing in bending). The framing systems can be grouped into two classes: (1) sawn lumber and parallel-chord wood trusses, and (2) wood I-joists. WSV screws may be used as alternate fasteners to common nails in each floor class subject to certain constraints.

For Diaphragms with a Framing System That Is Sawn Lumber or Parallel-Chord Wood Trusses

Simpson Strong-Tie WSV screws may be used as one-for-one substitutes for 10d common and smaller nails that are specified for horizontal diaphragm design in accordance with the AWC SDPWS 2021 and 2018, and IBC and IRC 2021/2018.

For Diaphragms with Wood I-Joist Framing Systems

I-joist manufacturers use the extra stiffness resulting from composite action when developing allowable floor joist span tables. Therefore, I-joist floor span tables generally assume glued-nailed construction.

1. For floor systems designed or intended to be glued-nailed:
   - WSV screws may be substituted one-for-one for common nails, without glue, provided the maximum allowable I-joist span is reduced by 12" compared to the I-joist manufacturer's glued-nailed spans. The screws shall have at least 1 ¼" penetration into the I-joist flange (or full penetration for flanges less than 1 ¼" thick).
   - Where glue is used with the screws, no reduction in span is required.
   - Check with the I-joist manufacturer for any additional diaphragm and framing requirements.
2. For floor systems designed or intended to be nailed-only:
   - WSV screws may be substituted one-for-one for common nails, with no reduction in span, provided at least 1 ¼" penetration into the I-joist flange is achieved (or full penetration for flanges less than 1 ¼" thick).
   - Check with the I-joist manufacturer for any additional diaphragm and framing requirements.

C-F-2023TECHSUP © 2023 Simpson Strong-Tie Company Inc.

Strong-Drive®
WSV SUBFLOOR Screw (cont.)

Codes/Standards: ICC-ES ESR-1472 (including City of LA Supplement)

For more information, see p. 229, C-F-2023 *Fastening Systems* catalog

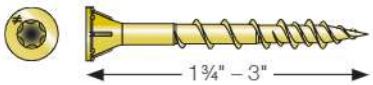

WSV Subfloor Screw — Allowable Lateral Loads for DFL/SP and SPF/HF

Size x Length (in.)	Model No.	Thread Length (in.)	Side Member Thickness (in.)	Reference Allowable Lateral Load (lb.)	
				0.42 ≤ G < 0.50	0.50 ≤ G
#9 x 2½	WSV212, WSVF212	1.95	1½	72	92
#9 x 3	WSV300, WSVF300	2.17		87	102

1. Table values are based on attachment of a 1½" side member to a 1½" main member of the same species and grade.
2. Table values are based on the 2018 NDS, C_D = 1.0. Values shall be multiplied by all applicable factors, such as duration of load, etc., except where noted.
3. Specific Gravities (G) assumed: DFL G = 0.50, SP G = 0.55, SPF G = 0.42.
4. The spacing of applied uniform loads to a multi-ply member shall not exceed 24" on center.
5. For minimum fastener spacing requirements for both side and main members, see the Spacing Requirements Figure and Table on next page.

WSV Subfloor Screw — Allowable Pull-Through and Withdrawal Loads

Size x Length (in.)	Model No.	Thread Length (in.)	Reference Allowable Pull-Through Loads (lb.)						Reference Allowable Withdrawal Loads (lb.)			
			Minimum Nominal Panel Thickness (in.)				Minimum Thickness (in.)		DFL/SP (lb./in.) W	DFL/SP (lb.) W_{max}	SPF/HF (lb./in.) W	SPF/HF (lb.) W_{max}
			OSB/Plywood Rated Sheathing, Exposure 1				DFL/SP	SPF/HF				
			7/16	15/32	19/32	23/32	1½	1½				
#9 x 1¾	WSV134	1.20	66	66	96	109	195	141	123	147	98	117
#9 x 2	WSV200	1.45							128	185	99	144
#9 x 2½	WSV212	1.95							128	256	117	233
#9 x 3	WSV300	2.17							141	311	121	266

1. Use the lower of the pull-through or withdrawal values to determine axial design value.
2. Screws must be installed normal to the side grain of the wood main member with the screw axis at a 90° angle to the wood fibers.
3. The main framing member must be wood having a minimum specific gravity of 0.50 for DFL and SP main members, and 0.42 for SPF and HF main members. DFL is Douglas Fir–Larch. SP is Southern Pine. SPF is Spruce-Pine-Fir. HF is Hem-Fir.
4. Withdrawal values, W, are in pounds per inch of the thread penetration in to the main member. W_{max} is the maximum reference withdrawal value.
5. Allowable loads are shown at the wood load duration factor of C_D = 1.0. Loads may be increased for load duration up to C_D = 1.6.

C-F-2023TECHSUP © 2023 Simpson Strong-Tie Company Inc.

Strong-Drive® WSV SUBFLOOR Screw (cont.)

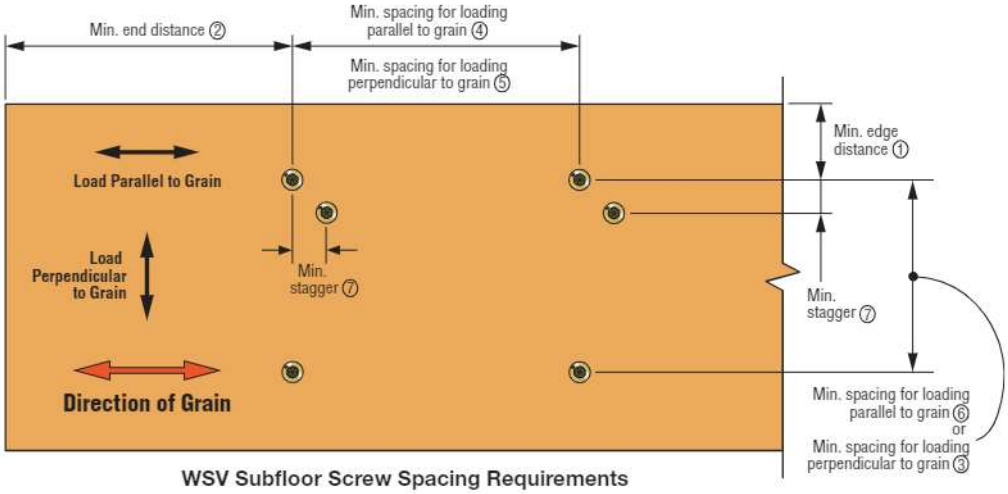

WSV Subfloor Screw Spacing Requirements

WSV Subfloor Screw Spacing Requirements

Condition	Direction of Load to Grain	ID	Minimum Distance or Spacing (in.)	
			G < 0.50	G ≥ 0.50
Edge Distance	Perpendicular	①	1½	1½
	Parallel	①	1	1½
End Distance	Perpendicular	②	2	2¾
	Parallel	②	2¾	3
Spacing Between Fasteners in a Row	Perpendicular	③	1	1½
	Parallel	④	2¾	2¾
Spacing Between Rows of Fasteners	Perpendicular	⑤	2	2
	Parallel	⑥	1	1½
Spacing Between Staggered Rows	Perpendicular or Parallel	⑦	½	¾

1. For axial loading only, use the following minimum dimensions: end distance = 1⅞", edge distance = ¾", spacing parallel to grain = 1⅜", spacing perpendicular to grain = ¾".

C-F-2023TECHSUP © 2023 Simpson Strong-Tie Company Inc.

Strong-Drive®
SDW TRUSS-PLY and EWP-PLY Screws

Truss-Ply Fastening, Multi-Ply Wood Members, Engineered-Lumber Products and Solid-Sawn Lumber

Codes/Standards: IAPMO UES ER-192" (including City of LA Supplement), State of Florida FL13975

US Patent 9,523,383

For more information, see pp. 101–102, C-F-2023 *Fastening Systems* catalog

SDW EWP-PLY Screw

SDW TRUSS-PLY Screw

Installation:

- SDW screws install best with a low-speed ½" drill motor and a T40 6-lobe bit. The matched bit included with the screws is recommended for best results.
- Predrilling is typically not required. SDW screws may be installed through metal truss plates as approved by the truss designer, provided the requirements of ANSI/TPI 1-2014 Section 8.9.2 are met (predrilling required through the plate using a maximum of 5/32" bit).
- Screw heads that are countersunk flush to the wood surface are acceptable if the screw has not spun out.
- Individual screw locations may be adjusted up to 3" to avoid conflicts with other hardware or to avoid lumber defects.

Notes to the designer:

1. Allowable loads are based on testing per ICC-ES AC233. Maximum allowable withdrawal load for DFL/SP/SCL is 200 lb. and for SPF/HF withdrawal is 150 lb. where the entire thread length is engaged into the main member.
2. Allowable loads in tables are shown at the load duration factor of C_D = 1.00 and shall be multiplied by all applicable adjustment factors per the NDS. Loads may be increased for load duration per the building code up to a C_D = 1.6.
3. For minimum fastener spacing requirements for both side and main members, see the Spacing Requirements Figure and Table on p. 128.
4. Maximum fastener spacing is recommended not to exceed 24" on center, as approved by a qualified designer.
5. Structural composite lumber (SCL = LVL, PSL or LSL) having a minimum 0.8E designation for lateral and withdrawal loading shall have an equivalent specific gravity of 0.50 minimum for lateral and 0.42 for withdrawal loading.
6. Tabular loads in this document are based on the capacity of the Simpson Strong-Tie SDW fasteners. The capacity of the multi-ply assembly must be checked by a qualified designer.
7. For a top-loaded, solid sawn 2x, multi-ply assembly that is evenly loaded across the entire assembly width, the recommended fastener detail is two rows of SDW screws where the spacing between fasteners in a row is 32". For a top-loaded, SCL (1¾") multi-ply assembly that is evenly loaded across the entire assembly width, the recommended spacing between SDW screws in a row is 24" o.c.; use two rows for up to 18"-deep members and three rows for members deeper than 18".
8. Visit **strongtie.com/drawings** and search for SD3-M for additional multi-ply fastening detail sheets and load tables in DWG, PDF or DXF format.

SDW Truss-Ply Screw — Allowable Shear Loads — DFL, SP, SPF, HF Lumber and 2x Truss Loaded on Head Side

Assembly	Model No.	Nominal Screw Length (in.)	Thread Length (in.)	Nominal Side Member Thickness (in.)	Main Member Penetration[1] (in.)	Reference DFL/SP Allowable Shear Loads (lb.)	Reference SPF/HF Allowable Shear Loads (lb.)
Two-ply 2x/truss	SDW22300	2 15/16	1 7/16	1½	1⅜	325	255
Three-ply 2x/truss desert	SDW22438	4⅜	1 7/16	1½	2⅞	400	325
Three-ply 2x/truss	SDW22458	4⅝	1 7/16	1½	2⅞	400	325
Four-ply 2x/truss desert	SDW22600	6	1 7/16	1½	4½	400	340
Four-ply 2x/truss	SDW22638	6⅜	1 7/16	1½	4½	400	340

1. For minimum penetration into main (outermost) member of 1⅛", use 235 lb. for DFL/SP and 210 lb. for SPF/HF.

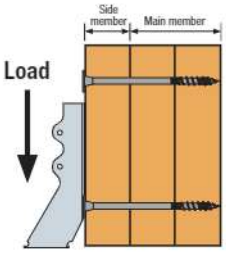

Loaded on Head Side
(three-ply assembly shown – other configurations similar)

SDW Truss-Ply Screw — Allowable Shear Loads — DFL, SP, SPF, HF Lumber and 2x Truss Loaded on Point Side

Assembly	Model No.	Nominal Screw Length (in.)	Thread Length (in.)	Nominal Side Member Thickness (in.)	Main Member Penetration[1] (in.)	Reference DFL/SP Allowable Shear Loads (lb.)	Reference SPF/HF Allowable Shear Loads (lb.)
Two-ply 2x/truss	SDW22300	2 15/16	1 7/16	1½	1⅜	325	255
Three-ply 2x/truss desert	SDW22438	4⅜	1 7/16	3	1⅜	275	255
Three-ply 2x/truss	SDW22458	4⅝	1 7/16	3	1⅜	275	255
Four-ply 2x/truss desert	SDW22600	6	1 7/16	4½	1⅜	275	255
Four-ply 2x/truss	SDW22638	6⅜	1 7/16	4½	1⅜	275	255

1. For minimum penetration into main member of 1⅛", use 235 lb. for DFL/SP and 210 lb. for SPF/HF.

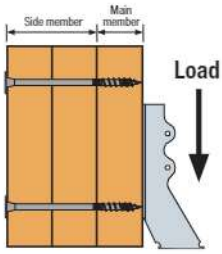

Loaded on Point Side
(three-ply assembly shown – other configurations similar)

C-F-2023TECHSUP © 2023 Simpson Strong-Tie Company Inc.

Strong-Drive®
SDW TRUSS-PLY and EWP-PLY Screws (cont.)

Lumber Fastening in Dry Climates

The highlighted regions on this map may experience drier conditions which can result in reduced lumber thickness (scant lumber) due to wood shrinkage. To help ensure optimum thread penetration into the main (outermost) member without excessive protrusion, Simpson Strong-Tie offers the 4⅜" and 6" lengths of the SDW screw, which are sized for the thinner members common in these "desert" climates. It is the responsibility of the truss manufacturer or contractor/installer to determine the appropriate fastener length for any given application. See tables and footnotes for minimum required penetration. Please see the Strong-Drive SDW Truss-Ply and SDW EWP-Ply product information on p. 125 for specific product length details.

SDW EWP-Ply Screw — Reference Allowable Shear Loads — LVL, PSL and LSL Loaded on Head Side

Assembly	Model No.	Nominal Screw Length (in.)	Thread Length (in.)	Nominal Side Member Thickness (in.)	Main Member Penetration[1] (in.)	Equivalent Specific Gravity 0.50 Allowable Shear Loads (lb.)	SPF/HF Allowable Shear Loads (lb.)
Two-ply 1¾" SCL	SDW22338	3⅜	1 9/16	1¾	1⅝	400	255
Three-ply 1¾" SCL	SDW22500	5	1 9/16	1¾	3¼	400	325
Four-ply 1¾" SCL	SDW22634	6¾	1 9/16	1¾	5	400	385
Two-ply 3½" SCL	SDW22634	6¾	1 9/16	3½	3¼	400	—

1. For minimum penetration into main (outermost) member of 1½", use 300 lb.

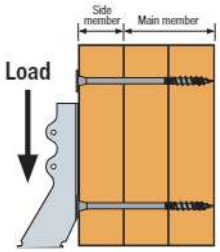

Loaded on Head Side
(three-ply assembly shown — other configurations similar)

SDW EWP-Ply Screw — Reference Allowable Shear Loads — LVL, PSL and LSL Loaded on Point Side

Assembly	Model No.	Nominal Screw Length (in.)	Thread Length (in.)	Nominal Side Member Thickness (in.)	Main Member Penetration[1] (in.)	Equivalent Specific Gravity 0.50 Allowable Shear Loads (lb.)	SPF/HF Allowable Shear Loads (lb.)
Two-ply 1¾" SCL	SDW22338	3⅜	1 9/16	1¾	1⅝	400	255
Three-ply 1¾" SCL	SDW22500	5	1 9/16	3½	1½	300	255
Four-ply 1¾" SCL	SDW22634	6¾	1 9/16	5¼	1½	300	255
Two-ply 3½" SCL	SDW22634	6¾	1 9/16	3½	3¼	400	—

1. For minimum penetration into main member of 1½", use 300 lb.

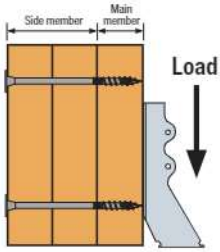

Loaded on Point Side
(three-ply assembly shown — other configurations similar)

SDW EWP-Ply Screw — Allowable Shear Loads — Two-Ply 3x2 / 4x2 Parallel-Chord Trusses Loaded on Either Side

Assembly	Model No.	Nominal Screw Length (in.)	Reference DFL/SP Allowable Shear Loads (lb.)	Reference SPF/HF Allowable Shear Loads (lb.)
Two-ply 3x2 PCT	SDW22500	5	280	200
Two-ply 4x2 PCT	SDW22634	6¾	280	200

1. To transfer uniform or concentrated loads applied to simply supported spans on assembly top chord:
   a. Space screws as required to transfer half the load into the supporting truss.
   b. Minimum screw spacing shall be 4" o.c.
2. To transfer concentrated loads applied to simply supported spans on an assembly top chord or vertical web:
   a. Concentrated loads must be applied at a panel point.
   b. Screws to be installed within 12" of the concentrated load on top-chord assembly
3. Gap between the trusses shall not exceed ⅛".
4. Floor sheathing shall be screwed or nailed to each top-chord ply. (Fastener spacing per the applicable Code requirements, or 12" o.c.)
5. SDW screws shall not be installed in areas where lumber wane exceeds ¼".
6. Hangers on skewed girders:
   a. Hanger loads not exceeding 34" o.c. on a skewed girder (resulting from uniformly spaced joists up to 24" o.c.) may be converted to a uniform load.
   b. For girders with hanger load spacing in excess of 34" o.c. the loads shall be considered as concentrated loads at the applicable locations.
7. Other configurations acceptable when approved by truss designer.

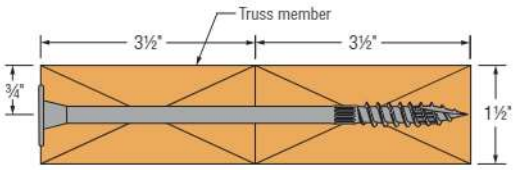

SDW Screw Position in Two-Ply 4x2 Truss
(two-ply 3x2 similar)

Concentrated Load

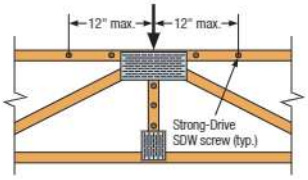

Uniform Load

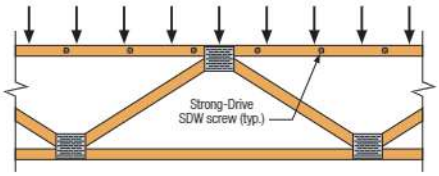

C-F-2023TECHSUP © 2023 Simpson Strong-Tie Company Inc.

Strong-Drive®
SDW **TRUSS-PLY** and **EWP-PLY** Screws (cont.)

SDW Truss-Ply Screws — Allowable Uniform Load (plf) Applied to Either Outside Member — Side-Loaded Multi-Ply Assemblies

Multiple Members		Nominal Screw Length (in.)	Loaded Side	Reference DFL/SP						Reference SPF/HF					
				12" o.c.		16" o.c.		24" o.c.		12" o.c.		16" o.c.		24" o.c.	
Assembly	Components			2 Rows	3 Rows	2 Rows	3 Rows	2 Rows	3 Rows	2 Rows	3 Rows	2 Rows	3 Rows	2 Rows	3 Rows
A-W	Two-ply 2x/Truss	2 15/16	Either	1,300	1,950	975	1,465	650	975	1,020	1,530	765	1,150	510	765
B-W	Three-ply 2x/Truss	4⅜ or 4⅝	Head	1,200	1,800	900	1,350	600	900	975	1,465	730	1,095	490	730
			Point	825	1,240	620	930	415	620	765	1,150	575	860	385	575
C-W	Four-ply 2x/Truss	6 or 6⅜	Head	1,065	1,600	800	1,200	535	800	905	1,360	680	1,020	455	680
			Point	735	1,100	550	825	365	550	680	1,020	510	765	340	510

1. Each ply is assumed to carry same proportion of load.
2. Loads may be applied to the head side and point side concurrently provided neither published allowable load is exceeded. (Example: a three-ply DFL assembly with a head side load of 1,300 plf and point side load of 900 plf may be fastened together with 3 rows of SDW at 16" o.c. between fasteners in a row.)
3. When hangers are installed on point side, hanger face fasteners shall be a minimum of 3" long.
4. Tables are based on Main Member Penetration as noted on pp. 125–126.
5. Hanger load spacing on the multi-ply assembly should not exceed 24" o.c. Exception: On a skewed girder, hanger loads up to 34" o.c. (resulting from joists uniformly spaced up to 24" o.c.) may be converted to a uniform load.
6. For minimum fastener spacing requirements for both side and main members, see the Spacing Requirements Figure and Table on the next page.

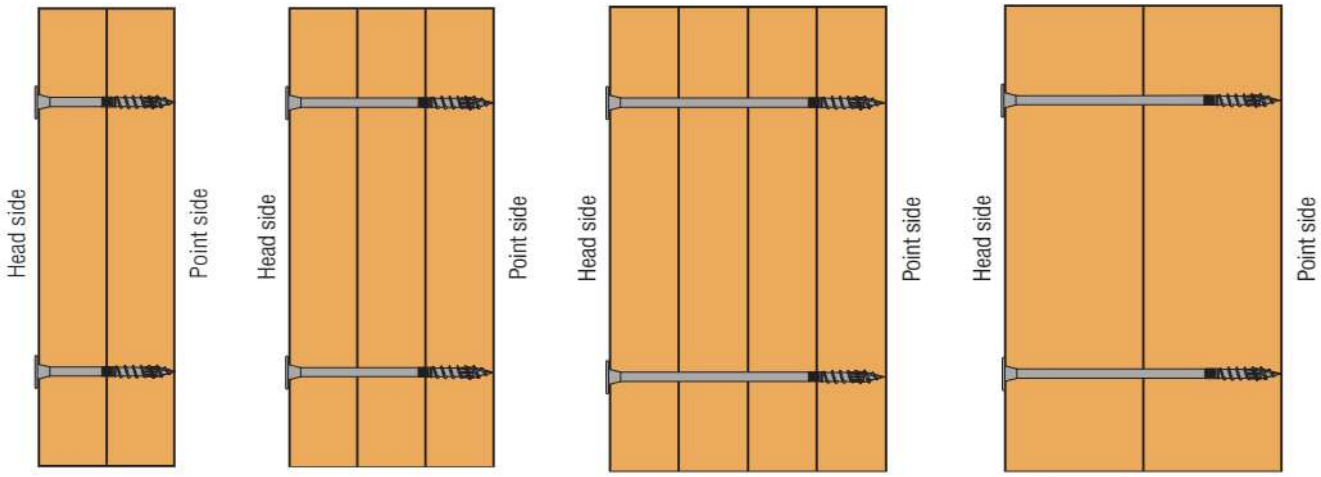

Assembly A-W | Assembly B-W | Assembly C-W | Assembly F-W

C-F-2023TECHSUP © 2023 Simpson Strong-Tie Company Inc.

Strong-Drive®
SDW **TRUSS-PLY** and **EWP-PLY** Screws (cont.)

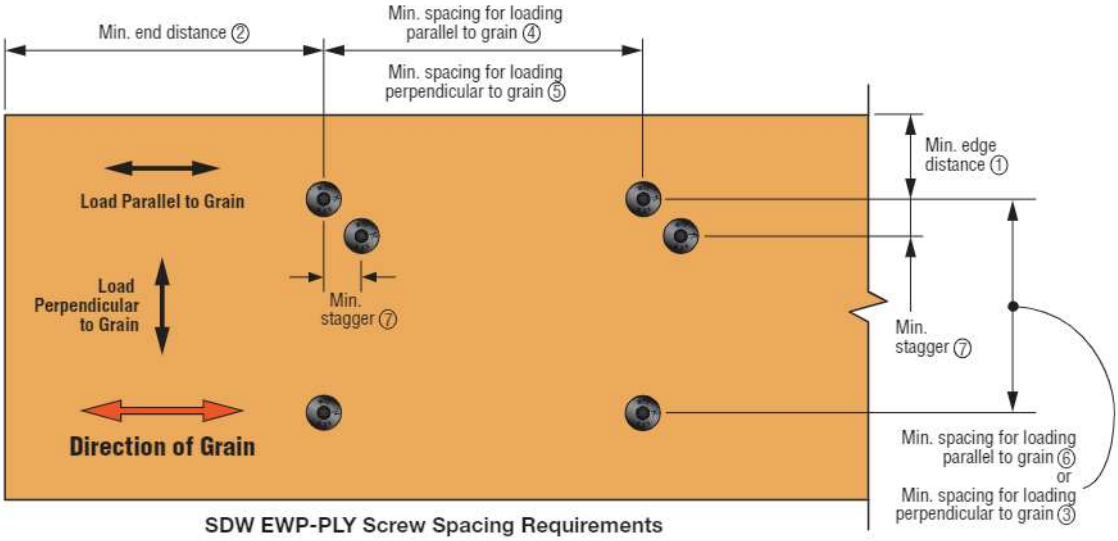

SDW EWP-PLY Screw Spacing Requirements

SDW Truss-Ply and EWP-Ply Screw Spacing Requirements

Condition	Direction of Load to Grain	ID	Minimum Distance or Spacing (in.)
Edge Distance	Perpendicular	①	1 7/16
	Parallel	①	1 7/16
End Distance	Perpendicular	②	6
	Parallel	②	6
Spacing Between Fasteners in a Row	Perpendicular	③	4
	Parallel	④	8
Spacing Between Rows of Fasteners	Perpendicular	⑤	4
	Parallel	⑥	4
Spacing Between Staggered Rows	Perpendicular or Parallel	⑦	5/8

1. For axial loading only, use the following minimum dimensions: end distance = 3¼", edge distance = 1⅜", spacing parallel to grain = 2¼", spacing perpendicular to grain = 1⅜".

SDW EWP-Ply Screws — Reference Allowable Uniform Load (plf) Applied to Either Outside Member — Side-Loaded Multi-Ply LVL, PSL, and LSL Assemblies

Multiple Members		Nominal Screw Length (in.)	Loaded Side	12" o.c.		16" o.c.		24" o.c.	
Assembly	Components			2 Rows	3 Rows	2 Rows	3 Rows	2 Rows	3 Rows
A-W	Two-ply SCL	3⅜	Either	1,600	2,400	1,200	1,800	800	1,200
B-W	Three-ply SCL	5	Head	1,200	1,800	900	1,350	600	900
			Point	900	1,350	675	1,015	450	675
C-W	Four-ply SCL	6¾	Head	1,065	1,600	800	1,200	535	800
			Point	800	1,200	600	900	400	600
F-W	Two-ply 3½" SCL	6¾	Either	1,600	2,400	1,200	1,800	800	1,200

1. Each ply is assumed to carry same proportion of load. Loads may be applied to the head side and point side concurrently provided neither published allowable load is exceeded. (Example: a three-ply assembly with a head side load of 1,300 plf and point side load of 1,000 plf may be fastened together with three rows of SDW at 16" o.c. between fasteners in a row.)
2. When hangers are installed on point side, hanger face fasteners shall be a minimum of 3" long.
3. Tables are based on main member penetration as noted in single-fastener load tables.

C-F-2023TECHSUP © 2023 Simpson Strong-Tie Company Inc.

Strong-Drive®
SDW TRUSS-PLY and EWP-PLY Screws (cont.)

Allowable Loads for Side-Loaded Multi-Ply Beam Assemblies per Screw

For side-loaded assemblies of structural composite lumber or sawn lumber, allowable loads in a single fastener format can be calculated from the information on pp. 125–128. See the figures on pp. 125–126 for side-load terminology. Assembly descriptions are on p. 127. The figure here is for fastener spacing relative to the side load.

As an example calculation, a three-ply beam or truss is to be fastened where the plies are of the same material and vertically-screw-laminated. The beam or truss is loaded on one face with a 2,400 lb. point load via a face-mount hanger. It is assumed that the face ply carries one-third of the load (800 lb.), and the remaining two-thirds of the load is transferred to the next two plies via the fasteners. The calculation for the allowable load applied to the outside ply of a multi-ply beam or truss is:

$$P_{allow} = Z\left(\frac{n}{n-1}\right)$$

P_{allow} = *allowable load that can be applied to the outside of the multi-ply truss or beam per fastener*

Z = *allowable shear per fastener in SCL or lumber from pp. 125–126*

n = *number of plies*

For the SDW EWP-Ply screw assembling SCL and the SDW Truss-Ply screw assembling sawn lumber or lumber trusses, the calculation provides the loads shown on p. 130.

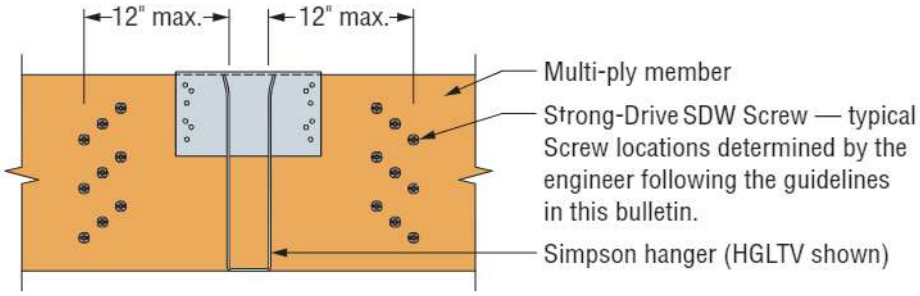

Maximum Fastener Spacing from Point Load

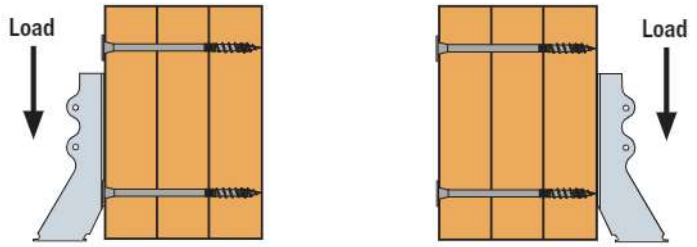

Loaded on Head Side
(three-ply assembly shown — other configurations similar)

Loaded on Point Side
(three-ply assembly shown — other configurations similar)

Load Applied to Outside Multi-Ply Beam

C-F-2023TECHSUP © 2023 Simpson Strong-Tie Company Inc.

Strong-Drive®
SDW TRUSS-PLY and EWP-PLY Screws (cont.)

SDW EWP-Ply Screw — Allowable Loads for Side-Loaded Multi-Ply SCL Assemblies

Assembly Illustration	SCL Components (Plies-thickness) (in.)	Model No.	Nominal Screw Length (in.)	Reference Allowable Loads for Side-Loaded Multi-Ply Truss or Beam per Screw (P_{allow}, lb.)	
				Head Side	Point Side
A-W	(2) 1¾	SDW22338	3⅜	800	800
B-W	(3) 1¾	SDW22500	5	600	450
C-W	(4) 1¾	SDW22634	6¾	533	400
F-W	(2) 3½	SDW22634	6¾	800	800

1. Loads based on equivalent specific gravity of 0.50.
2. Allowable loads include a load duration factor of C_D = 1.00 and may be increased up to C_D = 1.60 per the building code when applicable.
3. SDW EWP-Ply allowable shear loads are from p. 126.
4. Notes to the designer (p. 125) are applicable.
5. For minimum fastener spacing requirements for both side and main members, see the Spacing Requirements Figure and Table on p. 128. For assembly descriptions, see p. 127.

SDW Truss-Ply Screw — Allowable Loads for Side-Loaded Multi-Ply Lumber Assemblies

Assembly Illustration	Assembly Description	Model No.	Nominal Screw Length (in.)	Reference Allowable Loads for Side-Loaded Multi-Ply Assembly per Screw (P_{allow}, lb.)			
				DFL/SP		SPF/HF	
				Head Side	Point Side	Head Side	Point Side
A-W	Two-ply 2x/truss	SDW22300	2 15/16	650	650	510	510
B-W	Desert Three-ply 2x/truss	SDW22438	4⅜	600	410	485	380
B-W	Three-ply 2x/truss	SDW22458	4⅝	600	410	485	380
C-W	Desert Four-ply 2x/truss	SDW22600	6	530	365	450	340
C-W	Four-ply 2x/truss	SDW22638	6⅜	530	365	450	340

1. Loads based on specific gravity of 0.50 for DFL/SP and 0.42 for SPF/HF.
2. Allowable loads include a load duration factor of C_D = 1.00 and may be increased up to C_D = 1.60 per the building code when applicable.
3. SDW Truss-Ply allowable shear loads are from p. 125.
4. Notes to the designer (p. 125) are applicable.
5. For minimum fastener spacing requirements for both side and main members, see the Spacing Requirements Figure and Table on p. 128. For assembly descriptions, see p. 127.

C-F-2023TECHSUP © 2023 Simpson Strong-Tie Company Inc.

Strong-Drive®
SDWS TIMBER Screw

The Simpson Strong-Tie SDWS22800 Timber screw (Interior Grade and Exterior Grade) can be used to attach up to five plies of nominal 2x lumber or 5 plies of 1¾-inch EWP members. The connector shall be fastened separately from the ply fasteners. The reference allowable shear load is the shear applied by the face-mounted connector.

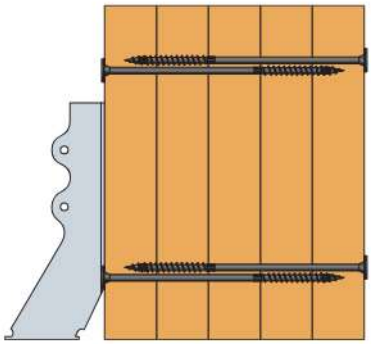

5-Ply 1¾" LVL Assembly Loaded Either Side

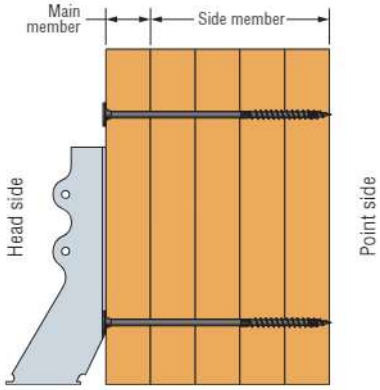

5-Ply 2x Truss Assembly Loaded Head Side

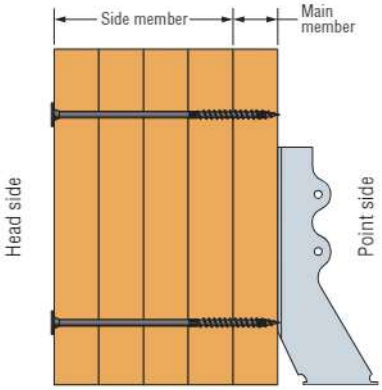

5-Ply 2x Truss Assembly Loaded Point Side

SDWS Timber Screw — Allowable Shear Loads for Side-Loaded 5-ply Assemblies

Assembly	Load Applied	Model No.	Nominal Screw Length (in.)	Thread Length (in.)	Nominal Side Member Thickness (in.)	Main Member Penetration (in.)	Reference Allowable Shear (lb.)	
							DFL/SP	SPF/HF
5-ply 2x/truss	Head Side	SDWS22800	8	3	1½	6	400	340
5-ply 2x/truss	Point Side	SDWS22800	8	3	6	1⅜[3]	275	255
5-ply 1¾" EWP	Either Side	SDWS22800[4]	8	3	1¾	—	400	340

1. Loads shown at a load duration of C_D = 1.00 and may be increased up to a load duration of C_D = 1.60.
2. Loads are based on SDWS22800 screw; designer is responsible to check manufacturers' recommendations for five-ply wood member design.
3. For 2x members with screws installed from one side only, maximum total beam width is 8" with a minimum main member penetration of 1½". For total widths less than 8", screw tip will protrude from the back of the assembly.
4. Screws must be installed from both sides as shown in five-ply 1¾" LVL Assembly figure and staggered as shown in the Spacing Requirements Figure. Screws on one side may be replaced with 5" or 6" long SDW EWP-PLY screws (models SDW22500 or SDW22600, respectively) at the same spacing and allowable load.
5. The SDWS22800 screws shown in the table may be replaced by SDWS22800DB Timber screws (Exterior Grade) and achieve the same loads.
6. Plies must be held together with clamping or other methods before screw installation to reduce gaps.
7. Maximum spacing between screws in a row is 24".

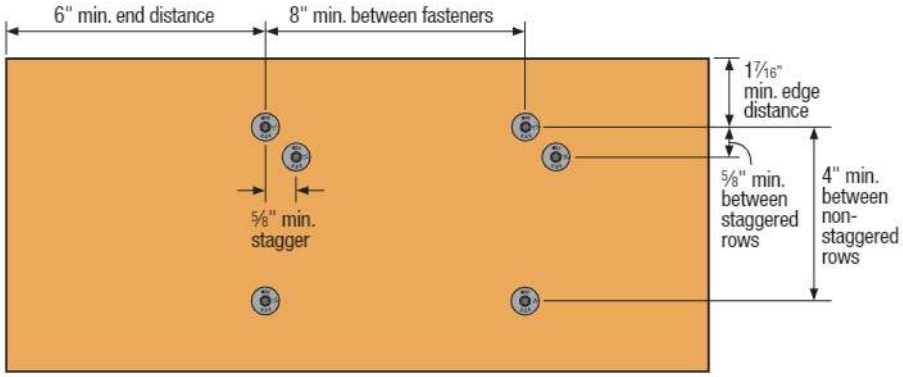

C-F-2023TECHSUP © 2023 Simpson Strong-Tie Company Inc.

Strong-Drive®
SDW TRUSS-PLY and SDWS TIMBER Screws

The Simpson Strong-Tie Strong-Drive SDW Truss-Ply (SDW22300, SDW22458) and SDWS Timber (SDWS22300DB) screws may be used in double shear applications with side members that are sawn wood or wood structural panels. Members are loaded in tension (parallel to grain).

SDW Truss-Ply and SDWS Timber Screw Spacing Requirements

Length (in.)	Model No.	Side Members	Maximum Number of Screws on Each Side of Break or Splice	Allowable Shear Loads per Screw (lb.)		
				SPF	DF	SYP
3	SDWS22300DB	23/32" Wood Structural Panel Rated Sheathing	4	300	345	365
3	SDW22300	23/32" Wood Structural Panel Rated Sheathing	4	320	335	335
4⅝	SDW22458	2x Solid Sawn	8	385	430	430

1. Allowable loads are based on Simpson Strong-Tie laboratory testing with a safety factor of five applied to the average ultimate test load.
2. Allowable loads are based on 1½" thick main members and assume no gap between side and main members.
3. Allowable loads are shown at the wood load duration factor of C_D = 1.00. Loads may be increased for load duration as permitted by the building code up to a C_D = 1.60. The designer shall apply all adjustment factors required per NDS-2018.
4. Allowable loads are based on members loaded in tension (parallel to grain). Bending loads are not applicable.
5. For applications with 2x side members, use allowable loads based on the lower of side member or main member species.
6. The designer is responsible for the design of wood members.
7. Fasteners shall be installed from the same side of the wood.

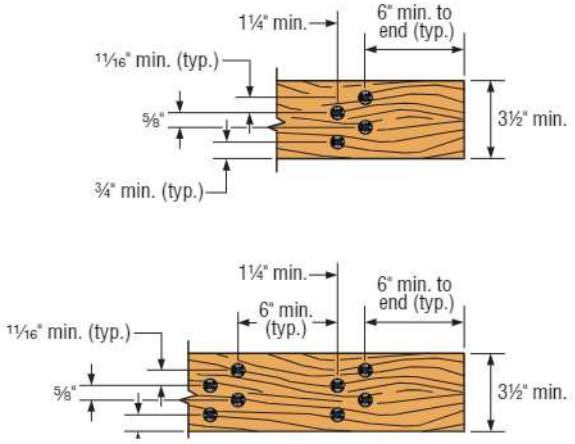

Spacing Details

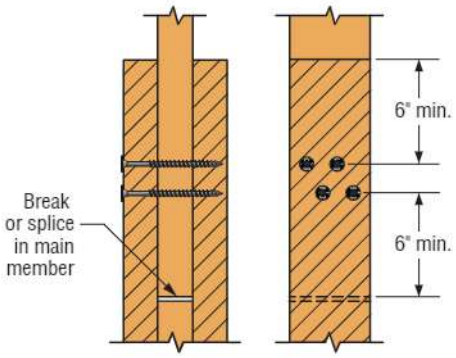

Typical Double Shear Installation

C-F-2023TECHSUP © 2023 Simpson Strong-Tie Company Inc.

Strong-Drive®
SDW TRUSS-PLY and EWP-PLY Screws

SDW-Built-Up Column Assemblies

Built-up column assemblies shown in this section determine the *Column Stability Coefficient*, K_f, when fastened using SDW Truss-Ply screws. For use with Section 15.3.2 of the 2015 and 2018 NDS, the table provides Strong-Drive SDW Truss-Ply screw substitution information to replace nails or bolts in built-up columns per Section 15.3.3 and 15.3.4 of NDS. Tabulated compression values using these coefficients are listed on pp. 134–135 for common conditions.

Design Parameters for Built-Up Columns using SDW Truss-Ply screws:

- $K_f = 0.60$ for SDW installed on one side
- $K_f = 0.70$ for SDW installed on both sides
- $l_e/d \leq 50$
- Each lamination (ply) has a rectangular cross-section and is at least 1½" thick
- All laminations have same face width, d_1
- Faces of adjacent laminations are in contact
- All laminations are full length
- Number of laminations: 2 to 4

SDW TRUSS-PLY Screw Substitution Table for NDS Specifications

No. of Plies	Minimum Nominal Lumber Size (in.)	NDS Specification				SDW Truss-Ply Screw Substitution			
		Fastener[1]	NDS Reference	Installation	Spacing (in.)	Model No.	Description	Installation	Spacing (in.)
2	2x4	10d common	Figure 15C	Both sides	6	SDW22300	0.221" dia. x 3"-long screw	One side	6
								Both sides	8
3	2x4	30d common	Figure 15C	Both sides	8	SDW22438	0.221" dia. x 4⅜"-long screw	One side	8
								Both sides	9
	2x6							One side	9
								Both sides	10
4	2x8	½" bolts	Figure 15D	One side	8	SDW22600	0.221" dia. x 6"-long screw	One side	7
								Both sides	8

1. 10d common: 0.148" dia. x 3" long nail.
2. 30d common: 0.207" dia. x 4½" long nail.
3. ½" bolts: ½" bolts with a washer between the wood and the bolt head and between the wood and the nut.
4. Visit **strongtie.com/drawings** and search for SD4-M for built-up column fastening detail sheets and load tables in DWG, PDF or DXF format.

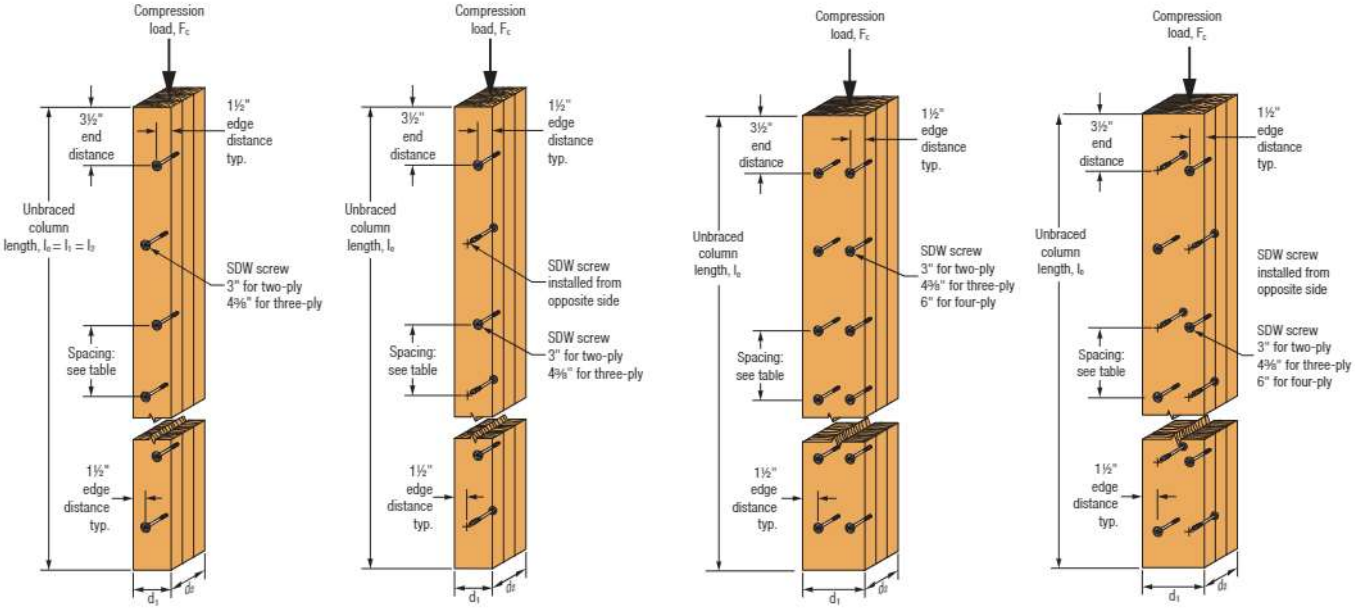

One Side | Both Sides | One Side | Both Sides

2x4 Built-Up Column | 2x6 or 2x8 Built-Up Column

C-F-2023TECHSUP © 2023 Simpson Strong-Tie Company Inc.

Multi-Ply Fastening

Allowable Compression Capacity for Built-Up Columns

Lumber		Fastener			Allowable Compression Capacity Parallel to Grain, F_c' (lb.)																			
					Floor (100)					Snow (115)					Roof (125)					Wind/Seismic (160)				
					Unbraced Length, ℓ_e (ft.)					Unbraced Length, ℓ_e (ft.)					Unbraced Length, ℓ_e (ft.)					Unbraced Length, ℓ_e (ft.)				
Size	No. of Plies	Model No.	Spacing	Installation	8	9	10	11	12	8	9	10	11	12	8	9	10	11	12	8	9	10	11	12
Southern Pine No. 2																								
2x4	2	SDW22300	6	One side	2,405	1,935	1,585	1,320	1,115	2,435	1,950	1,595	1,325	1,120	2,445	1,955	1,600	1,330	1,120	2,480	1,975	1,610	1,335	1,125
				Both sides	2,810	2,255	1,850	1,540	1,300	2,840	2,275	1,860	1,545	1,305	2,855	2,285	1,865	1,550	1,310	2,890	2,305	1,880	1,560	1,315
	3	SDW22438	8	One side	7,145	5,960	4,995	4,225	3,610	7,395	6,105	5,085	4,285	3,650	7,525	6,180	5,130	4,315	3,670	7,835	6,360	5,240	4,385	3,715
				Both sides	7,930	6,430	5,295	4,430	3,755	8,060	6,505	5,345	4,460	3,775	8,130	6,545	5,370	4,475	3,785	8,290	6,640	5,430	4,515	3,810
	4	SDW22600	6	One side	10,575	8,575	7,065	5,905	5,005	10,750	8,675	7,125	5,945	5,030	10,840	8,725	7,160	5,970	5,045	11,055	8,855	7,235	6,020	5,080
			8	Both sides	10,575	8,575	7,065	5,905	5,005	10,750	8,675	7,125	5,945	5,030	10,840	8,725	7,160	5,970	5,045	11,055	8,855	7,235	6,020	5,080
2x6	2	SDW22300	6	One side	3,770	3,035	2,485	2,070	1,750	3,815	3,055	2,500	2,080	1,760	3,835	3,070	2,510	2,085	1,760	3,890	3,100	2,530	2,100	1,770
				Both sides	4,400	3,540	2,900	2,415	2,040	4,450	3,565	2,920	2,430	2,050	4,475	3,580	2,925	2,435	2,055	4,535	3,620	2,950	2,450	2,065
	3	SDW22438	8	One side	11,120	9,300	7,815	6,615	5,655	11,530	9,540	7,960	6,710	5,720	11,745	9,665	8,035	6,760	5,750	12,250	9,955	8,215	6,875	5,830
				Both sides	12,975	10,850	9,115	7,720	6,600	13,450	11,130	9,285	7,830	6,675	13,700	11,275	9,375	7,885	6,710	14,290	11,615	9,585	8,025	6,805
	4	SDW22600	8	One side	20,575	18,380	16,200	14,180	12,400	22,215	19,490	16,920	14,655	12,720	23,130	20,080	17,300	14,900	12,885	25,515	21,545	18,215	15,490	13,275
				Both sides	24,005	21,445	18,895	16,545	14,470	25,915	22,735	19,740	17,100	14,840	26,990	23,430	20,185	17,385	15,035	29,765	25,140	21,250	18,070	15,490
2x8	2	SDW22300	6	One side	4,955	3,990	3,270	2,725	2,305	5,015	4,020	3,290	2,740	2,315	5,045	4,040	3,305	2,750	2,320	5,115	4,085	3,330	2,765	2,330
				Both sides	5,780	4,655	3,815	3,180	2,690	5,850	4,690	3,840	3,195	2,700	5,885	4,715	3,855	3,205	2,705	5,970	4,765	3,885	3,225	2,720
	3	SDW22438	8	One side	14,505	12,170	10,245	8,685	7,430	15,070	12,500	10,445	8,815	7,520	15,360	12,670	10,550	8,885	7,565	16,065	13,075	10,800	9,045	7,675
				Both sides	16,920	14,200	11,950	10,135	8,670	17,580	14,585	12,185	10,285	8,775	17,920	14,780	12,310	10,365	8,825	18,740	15,255	12,600	10,550	8,955
	4	SDW22600	8	One side	26,540	23,825	21,080	18,510	16,225	28,735	25,325	22,070	19,165	16,665	29,970	26,140	22,595	19,505	16,895	33,215	28,155	23,855	20,315	17,435
				Both sides	30,965	27,795	24,590	21,595	18,930	33,520	29,550	25,750	22,360	19,445	34,970	30,495	26,360	22,755	19,710	38,750	32,845	27,830	23,705	20,340
Spruce-Pine-Fir No. 1/No. 2																								
2x4	2	SDW22300	6	One side	2,385	1,925	1,575	1,315	1,110	2,415	1,940	1,590	1,320	1,115	2,430	1,950	1,595	1,325	1,120	2,465	1,970	1,605	1,335	1,125
				Both sides	2,785	2,245	1,840	1,535	1,295	2,820	2,265	1,850	1,540	1,305	2,835	2,275	1,860	1,545	1,305	2,880	2,300	1,875	1,555	1,315
	3	SDW22438	8	One side	6,955	5,850	4,930	4,185	3,580	7,235	6,015	5,030	4,250	3,625	7,380	6,095	5,080	4,280	3,645	7,730	6,300	5,205	4,360	3,700
				Both sides	7,830	6,375	5,260	4,405	3,735	7,980	6,460	5,315	4,440	3,760	8,055	6,500	5,340	4,460	3,775	8,235	6,610	5,405	4,500	3,805
	4	SDW22600	6	One side	10,445	8,495	7,015	5,875	4,985	10,640	8,610	7,085	5,920	5,015	10,740	8,670	7,120	5,945	5,030	10,980	8,810	7,210	6,000	5,070
			8	Both sides	10,445	8,495	7,015	5,875	4,985	10,640	8,610	7,085	5,920	5,015	10,740	8,670	7,120	5,945	5,030	10,980	8,810	7,210	6,000	5,070
2x6	2	SDW22300	6	One side	3,735	3,010	2,470	2,060	1,745	3,785	3,040	2,490	2,075	1,755	3,810	3,055	2,500	2,080	1,755	3,870	3,090	2,520	2,095	1,765
				Both sides	4,360	3,515	2,885	2,405	2,035	4,415	3,545	2,905	2,420	2,045	4,445	3,565	2,915	2,425	2,050	4,515	3,605	2,940	2,445	2,060
	3	SDW22438	8	One side	10,780	9,100	7,690	6,535	5,605	11,240	9,370	7,855	6,645	5,675	11,480	9,510	7,945	6,700	5,710	12,060	9,850	8,150	6,835	5,800
				Both sides	12,575	10,615	8,970	7,625	6,535	13,115	10,935	9,165	7,750	6,620	13,395	11,100	9,265	7,815	6,665	14,070	11,490	9,505	7,970	6,770
	4	SDW22600	8	One side	19,335	17,500	15,600	13,780	12,130	21,035	18,700	16,410	14,320	12,495	22,010	19,355	16,835	14,600	12,685	24,600	20,995	17,875	15,270	13,130
				Both sides	22,555	20,420	18,200	16,075	14,155	24,540	21,815	19,140	16,705	14,580	25,675	22,580	19,640	17,030	14,795	28,700	24,495	20,850	17,815	15,320
2x8	2	SDW22300	6	One side	4,900	3,955	3,250	2,715	2,295	4,965	3,995	3,275	2,730	2,305	5,000	4,015	3,290	2,735	2,315	5,085	4,065	3,320	2,760	2,325
				Both sides	5,715	4,615	3,790	3,165	2,680	5,795	4,660	3,820	3,185	2,690	5,835	4,685	3,835	3,195	2,700	5,935	4,745	3,870	3,220	2,715
	3	SDW22438	8	One side	13,980	11,860	10,050	8,565	7,350	14,625	12,240	10,285	8,715	7,450	14,960	12,440	10,410	8,790	7,505	15,775	12,910	10,695	8,980	7,630
				Both sides	16,310	13,835	11,730	9,990	8,575	17,060	14,280	12,000	10,165	8,695	17,455	14,510	12,145	10,260	8,755	18,405	15,060	12,480	10,475	8,900
	4	SDW22600	8	One side	24,725	22,510	20,175	17,900	15,810	26,990	24,140	21,290	18,650	16,320	28,300	25,040	21,885	19,045	16,585	31,835	27,315	23,335	19,985	17,210
				Both sides	28,850	26,265	23,540	20,885	18,445	31,490	28,165	24,840	21,760	19,040	33,020	29,210	25,530	22,215	19,350	37,140	31,865	27,225	23,315	20,080

1. Adjustment factors: [C_M, C_t, C_i] = 1.0. For C_F refer to NDS, Table 4A.
2. For LRFD, see NDS, Section 4.3.
3. Compression perpendicular to grain has not been evaluated.
4. All SDW screws have an E-coat™. Simpson Strong-Tie® has conducted testing per Acceptance Criteria AC257, showing in dry conditions E-coat performs equivalent to hot-dip galvanized (HDG) coating.
5. For fire retardant treated (FRT) wood, additional reduction factors may need to be applied based on the manufacturer's recommendations.
6. The column capacities are evalutaed for column being completely unbraced in both strong and weak axis. $l_e = l_1 = l_2$.

C-F-2023TECHSUP © 2023 Simpson Strong-Tie Company Inc.

Multi-Ply Fastening

Allowable Compression Capacity for Built-Up Columns (cont.)

Lumber		Fastener			Allowable Compression Capacity Parallel to Grain, F_c' (lb.)																			
					Floor (100)					Snow (115)					Roof (125)					Wind/Seismic (160)				
					Unbraced Length, ℓ_e (ft.)					Unbraced Length, ℓ_e (ft.)					Unbraced Length, ℓ_e (ft.)					Unbraced Length, ℓ_e (ft.)				
Size	No. of Plies	Model No.	Spacing	Installation	8	9	10	11	12	8	9	10	11	12	8	9	10	11	12	8	9	10	11	12
Douglas–Fir Larch No. 2																								
2x4	2	SDW22300	6	One side	2,725	2,190	1,795	1,495	1,265	2,755	2,210	1,810	1,505	1,270	2,770	2,220	1,815	1,510	1,275	2,810	2,245	1,830	1,520	1,280
				Both sides	3,175	2,555	2,095	1,745	1,475	3,215	2,580	2,110	1,755	1,485	3,235	2,590	2,115	1,760	1,485	3,280	2,615	2,135	1,770	1,495
	3	SDW22438	8	One side	7,990	6,695	5,635	4,775	4,085	8,295	6,875	5,745	4,845	4,130	8,455	6,970	5,800	4,880	4,155	8,835	7,185	5,935	4,970	4,215
				Both sides	8,950	7,270	6,000	5,020	4,255	9,110	7,365	6,055	5,055	4,280	9,190	7,410	6,085	5,075	4,295	9,390	7,530	6,160	5,125	4,330
	4	SDW22600	6	One side	11,930	9,695	7,995	6,695	5,675	12,145	9,820	8,075	6,745	5,710	12,255	9,880	8,115	6,770	5,725	12,520	10,035	8,210	6,835	5,770
			8	Both sides	11,930	9,695	7,995	6,695	5,675	12,145	9,820	8,075	6,745	5,710	12,255	9,880	8,115	6,770	5,725	12,520	10,035	8,210	6,835	5,770
2x6	2	SDW22300	6	One side	4,260	3,435	2,815	2,350	1,985	4,315	3,465	2,835	2,360	1,995	4,340	3,480	2,845	2,370	2,000	4,405	3,520	2,870	2,385	2,010
				Both sides	4,970	4,005	3,285	2,740	2,320	5,035	4,040	3,310	2,755	2,330	5,065	4,060	3,320	2,765	2,335	5,140	4,105	3,350	2,780	2,345
	3	SDW22438	8	One side	12,385	10,425	8,790	7,465	6,390	12,890	10,720	8,975	7,580	6,470	13,155	10,875	9,065	7,640	6,510	13,790	11,240	9,290	7,785	6,610
				Both sides	14,450	12,160	10,255	8,710	7,455	15,040	12,510	10,470	8,845	7,550	15,345	12,685	10,580	8,915	7,595	16,085	13,115	10,840	9,085	7,710
	4	SDW22600	8	One side	22,435	20,225	17,960	15,820	13,895	24,350	21,555	18,850	16,410	14,295	25,440	22,280	19,320	16,715	14,500	28,315	24,085	20,455	17,445	14,985
				Both sides	26,170	23,595	20,955	18,455	16,215	28,405	25,145	21,990	19,145	16,675	29,675	25,990	22,540	19,500	16,915	33,035	28,095	23,860	20,355	17,485
2x8	2	SDW22300	6	One side	5,590	4,510	3,705	3,090	2,615	5,665	4,555	3,730	3,105	2,625	5,705	4,575	3,745	3,115	2,635	5,795	4,630	3,780	3,140	2,650
				Both sides	6,525	5,260	4,320	3,605	3,050	6,610	5,310	4,350	3,625	3,065	6,655	5,340	4,370	3,635	3,070	6,760	5,400	4,410	3,660	3,090
	3	SDW22438	8	One side	16,075	13,590	11,495	9,780	8,385	16,780	14,010	11,755	9,945	8,495	17,150	14,225	11,885	10,030	8,555	18,035	14,740	12,200	10,235	8,690
				Both sides	18,755	15,855	13,415	11,410	9,785	19,580	16,345	13,710	11,605	9,915	20,010	16,595	13,865	11,700	9,980	21,045	17,195	14,235	11,940	10,140
	4	SDW22600	8	One side	28,710	26,035	23,245	20,565	18,125	31,270	27,850	24,475	21,385	18,680	32,740	28,845	25,130	21,815	18,965	36,670	31,350	26,715	22,840	19,650
				Both sides	33,495	30,375	27,120	23,990	21,145	36,480	32,490	28,555	24,950	21,795	38,195	33,650	29,315	25,450	22,125	42,780	36,575	31,165	26,645	22,925
Hem-Fir No. 2																								
2x4	2	SDW22300	6	One side	2,235	1,795	1,465	1,220	1,030	2,260	1,805	1,475	1,225	1,035	2,270	1,810	1,480	1,230	1,035	2,295	1,830	1,490	1,235	1,040
				Both sides	2,610	2,095	1,710	1,425	1,205	2,635	2,105	1,720	1,430	1,205	2,645	2,115	1,725	1,435	1,210	2,675	2,130	1,735	1,440	1,215
	3	SDW22438	8	One side	6,775	5,600	4,670	3,940	3,355	6,975	5,715	4,745	3,985	3,385	7,075	5,775	4,780	4,010	3,405	7,320	5,920	4,865	4,065	3,440
				Both sides	7,410	5,985	4,915	4,105	3,475	7,510	6,045	4,955	4,130	3,490	7,565	6,075	4,975	4,140	3,500	7,695	6,150	5,020	4,175	3,520
	4	SDW22600	6	One side	9,875	7,975	6,555	5,475	4,635	10,015	8,060	6,605	5,505	4,655	10,085	8,100	6,630	5,525	4,665	10,260	8,200	6,695	5,565	4,695
			8	Both sides	9,875	7,975	6,555	5,475	4,635	10,015	8,060	6,605	5,505	4,655	10,085	8,100	6,630	5,525	4,665	10,260	8,200	6,695	5,565	4,695
2x6	2	SDW22300	6	One side	3,505	2,810	2,300	1,915	1,620	3,540	2,830	2,315	1,925	1,625	3,555	2,840	2,320	1,930	1,625	3,600	2,870	2,335	1,940	1,635
				Both sides	4,090	3,280	2,685	2,235	1,890	4,130	3,305	2,700	2,245	1,895	4,150	3,315	2,705	2,250	1,900	4,200	3,345	2,725	2,265	1,905
	3	SDW22438	8	One side	10,535	8,740	7,300	6,165	5,255	10,865	8,930	7,420	6,240	5,310	11,035	9,030	7,480	6,280	5,335	11,445	9,265	7,625	6,375	5,400
				Both sides	12,290	10,195	8,520	7,190	6,135	12,675	10,420	8,655	7,280	6,195	12,875	10,535	8,730	7,325	6,225	13,350	10,810	8,895	7,435	6,300
	4	SDW22600	8	One side	20,080	17,705	15,430	13,400	11,650	21,510	18,630	16,020	13,780	11,905	22,295	19,120	16,325	13,980	12,040	24,275	20,310	17,060	14,450	12,355
				Both sides	23,430	20,655	18,000	15,630	13,595	25,095	21,735	18,690	16,080	13,890	26,010	22,305	19,050	16,310	14,045	28,320	23,695	19,905	16,860	14,415
2x8	2	SDW22300	6	One side	4,605	3,695	3,025	2,520	2,130	4,650	3,725	3,045	2,535	2,140	4,675	3,740	3,055	2,540	2,145	4,735	3,775	3,075	2,555	2,155
				Both sides	5,370	4,315	3,530	2,940	2,485	5,425	4,345	3,550	2,955	2,495	5,455	4,365	3,565	2,960	2,500	5,525	4,405	3,590	2,980	2,510
	3	SDW22438	8	One side	13,720	11,425	9,570	8,085	6,905	14,185	11,695	9,735	8,195	6,975	14,425	11,830	9,815	8,250	7,015	14,995	12,160	10,020	8,380	7,100
				Both sides	16,005	13,325	11,160	9,435	8,055	16,550	13,640	11,355	9,560	8,140	16,830	13,805	11,455	9,625	8,180	17,495	14,190	11,690	9,775	8,285
	4	SDW22600	8	One side	25,810	22,890	20,050	17,470	15,230	27,745	24,170	20,875	18,010	15,590	28,820	24,850	21,300	18,285	15,775	31,560	26,510	22,330	18,945	16,215
				Both sides	30,115	26,705	23,390	20,385	17,770	32,370	28,195	24,350	21,010	18,190	33,620	28,990	24,850	21,335	18,405	36,820	30,930	26,055	22,105	18,920

1. Adjustment factors: [C_M, C_t, C_i] = 1.0. For C_F refer to NDS, Table 4A.
2. For LRFD, see NDS, Section 4.3.
3. Compression perpendicular to grain has not been evaluated.
4. All SDW screws have an E-coat™. Simpson Strong-Tie® has conducted testing per Acceptance Criteria AC257, showing in dry conditions E-coat performs equivalent to hot-dip galvanized (HDG) coating.
5. For fire-retardant-treated (FRT) wood, additional reduction factors may need to be applied based on the manufacturer's recommendations.
6. The column capacities are evaluated for column being completely unbraced in both strong and weak axis. $l_e = l_1 = l_2$.

C-F-2023TECHSUP © 2023 Simpson Strong-Tie Company Inc.

Strong-Drive® WSV SUBFLOOR Screw

Simpson Strong-Tie Strong Drive WSV Subfloor flat head, countersunk wood screws are a fast and reliable method for attaching two-ply and three-ply girder trusses.

For more information, see p. 229, C-F-2023 *Fastening Systems* catalog

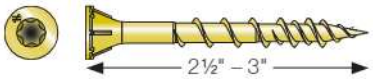

WSV Subfloor Screw — Allowable Loads Comparison of Common Fasteners Used to Attach Truss Plies Together

Size x Length (in.)	Model No.	Reference Shear (lb.)		Reference Withdrawal (lb.)	
		DFL/SP	SPF/HF	DFL/SP	SPF/HF
#9 x 2½	WSV212	92	72	128	117
#9 x 3	WSV300	102	87	211	181
0.120 x 3 nail[5]	—	81	69	44	28
0.131 x 3 nail[5]	—	97	82	48	31

1. Table values are based on attachment of a 1½" side member to a 1½" main member of the same species and grade.
2. Table values are based on the NDS, C_D = 1.0. Values shall be multiplied by all applicable factors, such as duration of load, etc., except where noted.
3. Specific Gravities (G) assumed: DFL G = 0.50, SP G = 0.55, SPF G = 0.42.
4. For a series of loads to be considered a uniform load, the loads must be applied no further apart than 24" o.c.
5. Assumes nail F_{yb} = 100 ksi.
6. WSV212 and WSV300 withdrawal values based on testing per AC233.
7. For minimum fastener spacing requirements for both side and main members, see the Spacing Requirements Figure and Table on next page.

Two-Ply Assembly **Three-Ply Assemblies**

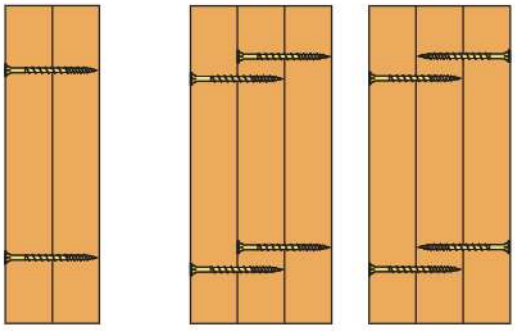

Truss Plant Installation **Jobsite Installation**

Installation:

- Screw spacing shall be in accordance with the fastener schedule provided on the truss design drawing or as otherwise approved by the truss designer. Screw spacing shall not exceed 12" on center and shall not be less than 3" on center.
- WSV screws may be installed with the screw heads in either the loaded or unloaded ply. Do not overdrive screws.
- For three-ply girder assemblies, the WSV screws may be installed from the same side as each ply is applied (no flipping of the truss is required) in accordance with BCSI (2006 edition). Girders that are fastened together at the jobsite must have the fastener heads visible for inspection.
- Stagger the screws in the third ply a minimum of 1" from the screws installed into the first two plies.
- Individual screw locations may be adjusted up to ½ of the required screw spacing to avoid conflicts with other hardware or to avoid lumber defects. (3" minimum spacing still required.)
- Use a minimum of 3"-long fasteners to attach hangers to the girder truss.
- A 2,500-rpm motor is recommended.

Ply-to-Ply Connection Comparison for a 30'-Long Three-Ply Girder — Bottom Chord Loading

Sample Bottom Chord Nailing Requirement for Three-ply Girder Using 0.120" x 3" Collated Nails

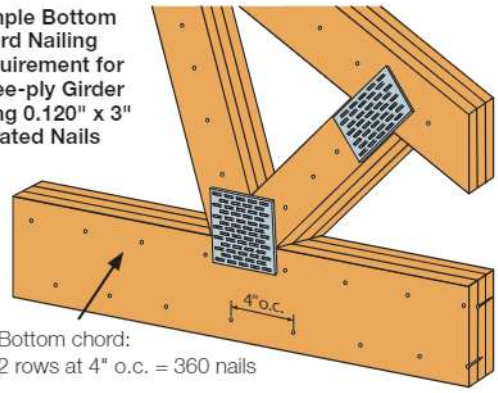

Bottom chord:
2 rows at 4" o.c. = 360 nails

Alternate Fastening Using WSV3S Screw

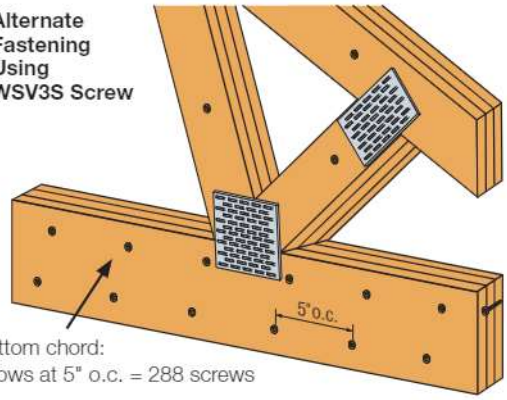

Bottom chord:
2 rows at 5" o.c. = 288 screws

Examples based on three-ply girder spanning 30', 2x6 southern pine bottom chords, 825 plf bottom cord load and 1.15 load duration. Nail and screw spacing is repeated for each layer.

C-F-2023TECHSUP © 2023 Simpson Strong-Tie Company Inc.

Strong-Drive® WSV SUBFLOOR Screw (cont.)

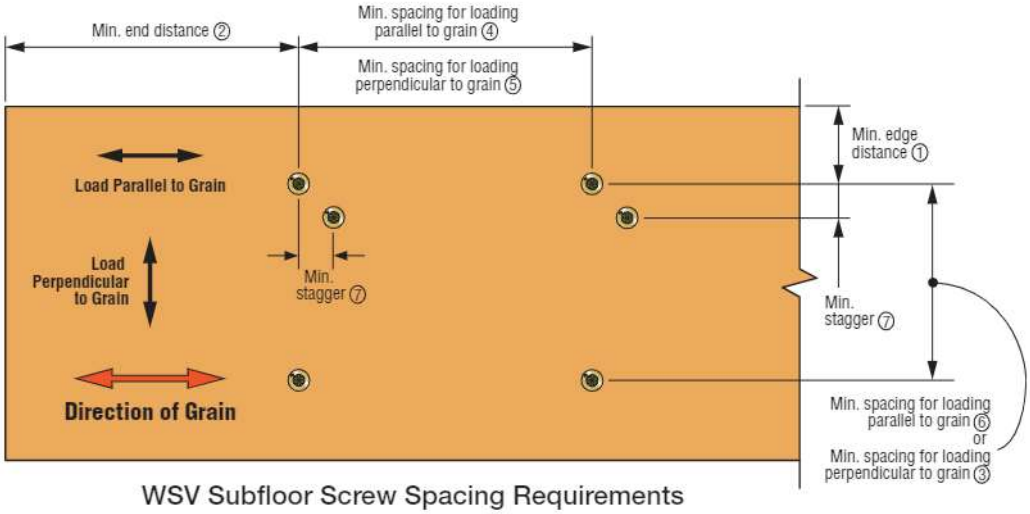

WSV Subfloor Screw Spacing Requirements

WSV Subfloor Screw Spacing Requirements

Condition	Direction of Load to Grain	ID	Minimum Distance or Spacing (in.)	
			G < 0.50	G ≥ 0.50
Edge Distance	Perpendicular	①	1½	1½
	Parallel	①	1	1½
End Distance	Perpendicular	②	2	2¾
	Parallel	②	2¾	3
Spacing Between Fasteners in a Row	Perpendicular	③	1	1½
	Parallel	④	2¾	2¾
Spacing Between Rows of Fasteners	Perpendicular	⑤	2	2
	Parallel	⑥	1	1½
Spacing Between Staggered Rows	Perpendicular or Parallel	⑦	½	¾

1. For axial loading only, use the following minimum dimensions: end distance = 1⅞", edge distance = ¾", spacing parallel to grain = 1⅜", spacing perpendicular to grain = ¾".

C-F-2023TECHSUP © 2023 Simpson Strong-Tie Company Inc.

Strong-Drive®
SDHR COMBO-HEAD Screw

The SDHR screws are load rated for shear, pullover and withdrawal resistance in sawn wood, glulam, CLT and structural composite lumber products (e.g., LVL, PSL, LSL) fastened to steel side member. The screws have either a blue-zinc coating or zinc-nickel coating and are designed for general interior, dry-service applications. The pre-drilled metal plate hole diameters for the SDHR27 screws and SDHR31 screws are 7⁄16" and ½", respectively.

For more information, see p. 99, C-F-2023 *Fastening Systems* catalog

SDHR COMBO-HEAD Screw — Allowable Lateral Design Values for Single-Fastener, Steel-to-Wood Connections

Length (in.)	Fastener Designation	Reference Allowable Lateral Design Value, Z (lbf)					
		Side Member Thickness, ga. (mil)					
		16 (54)	14 (68)	12 (97)	10 (118)	7 (171)	3 (229)
SG ≥ 0.42							
4	SDHR27400	400	400	400	400	400	485
6¼	SDHR27614	400	400	400	400	400	485
4	SDHR31400	540	540	540	540	540	565
6¼	SDHR31614	540	540	540	540	540	565

1. The main member must be sawn lumber, glulam, or CLT with an assigned specific gravity (SG) as shown in the table above or an engineered wood product with a minimum grade of 1.3E and equivalent SG of at least 0.50.
2. Tabulated reference allowable lateral design values (Z) are shown for normal duration of load (C_D = 1.0). Loads may be increased for load duration as permitted by the building code up to a C_D = 1.60.
3. Screws must be installed into the face or side grain of the wood main member with the screw axis at a 90-degree angle to the wood surface.
4. Minimum fastener penetration must be equal to the screw length less the thickness of the side member.
5. Tabulated reference lateral design values apply to combinations of parallel- and perpendicular-to-grain loading.

SDHR COMBO-HEAD Screw — Allowable Withdrawal Design Values

Fastener Designation	Screw Length (in.)	Thread Length (in.)	Reference Allowable Withdrawal Design Value, W (lb./in.)	
			0.42 ≤ SG < 0.50	SG ≥ 0.50
SDHR27400	4.00	2.15	185	195
SDHR27614	6.25	4.30		
SDHR31400	4.00	2.15	195	195
SDHR31614	6.25	4.30		

1. The tabulated reference allowable withdrawal design value, W, is in pounds per inch of the thread penetration into the side grain or face grain of the main member. Thread penetration is the portion of the threaded length held in the main member, including the screw point.
2. The tabulated reference withdrawal design values, W, are shown for normal duration of load (C_D = 1.0) and must be multiplied by all applicable adjustment factors from the NDS as referenced in the IBC or IRC.
3. Wood main members must have an assigned specific gravity (SG) as indicated in the table or for engineered wood products, a minimum grade of 1.3E and equivalent SG of 0.50.

Strong-Drive SDHR Combo-Head Screw

C-F-2023TECHSUP © 2023 Simpson Strong-Tie Company Inc.

Strong-Drive®
SDHR COMBO-HEAD Screw (cont.)

SDHR COMBO HEAD Screw — Allowable Head Pullover Design Values

Fastener Designation	Reference Pullover Design Value (lbf) ≥ 16 ga. (54 mil)
SDHR27400	500
SDHR27614	
SDHR31400	570
SDHR31614	

SDHR COMBO-HEAD Screw Spacing Requirements

Condition	Direction of Load to Grain	ID	Minimum Distance or Spacing (in.)
Edge Distance	Perpendicular	①	1¾
	Parallel	①	1¾
End Distance	Perpendicular	②	6
	Parallel	②	6
Spacing Between Fasteners in a Row	Perpendicular	③	3
	Parallel	④	4
Spacing Between Rows of Fasteners	Perpendicular	⑤	3
	Parallel	⑥	3
Spacing Between Staggered Rows	Perpendicular or Parallel	⑦	1½

1. For SDHR27 screws subject to axial loading only, use the following minimum dimensions: end distance = 4", edge distance = 1⅝", spacing parallel to grain = 2⅞", spacing perpendicular to grain = 2".
2. For SDHR31 screws subject to axial loading only, use the following minimum dimensions: end distance= 4¾", edge distance = 2", spacing parallel to grain = 3⅜", spacing perpendicular to grain = 2⅜".
3. Minimum steel edge distance, end distances and spacing of the screws shall be determined in accordance with AISC 360.

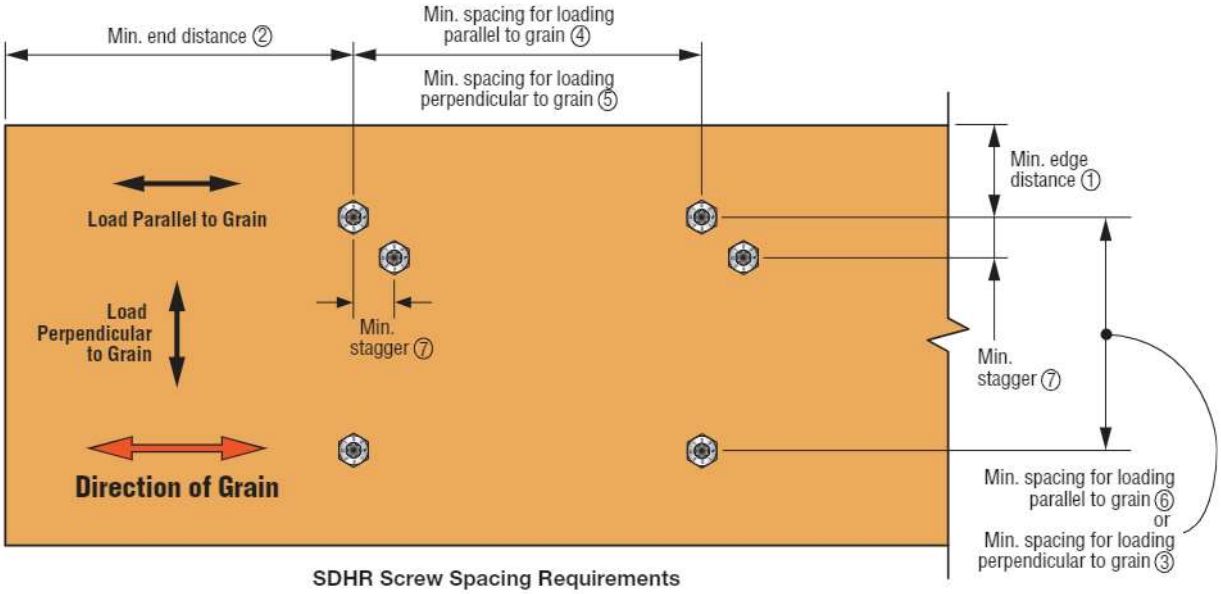

SDHR Screw Spacing Requirements

C-F-2023TECHSUP © 2023 Simpson Strong-Tie Company Inc.

Strong-Drive®
SDCF TIMBER-CF Screw

The SDCF Timber-CF screws are self-tapping screws and are designed to be installed without predrilling.

The screws have yellow zinc coating and are designed for general interior, dry-service applications.

For more information, see p. 96, C-F-2023 *Fastening Systems* catalog

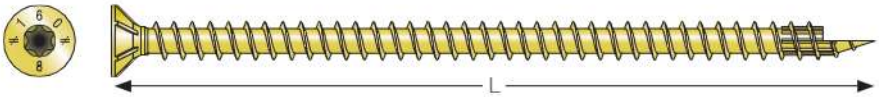

Strong-Drive SDCF TIMBER-CF Screw

SDCF TIMBER-CF Screw — Allowable Lateral Design Values for Single Shear Wood-to-Wood Connections

Fastener Designation	Reference Allowable Lateral Design Value, Z (lbf)							
	Side Member Thickness (in.)							
	1.5	2	2.5	3	3.5	4	4.5	13
0.42 ≤ SG < 0.50								
SDCF22434	325	—	—	—	—	—	—	—
SDCF22512	325	325	—	—	—	—	—	—
SDCF22614	325	325	325	—	—	—	—	—
SDCF22700	325	325	325	325	—	—	—	—
SDCF22858	325	325	325	325	325	—	—	—
SDCF221014	325	325	325	325	325	—	—	—
SDCF221134	325	325	325	325	325	325	325	—
SDCF221334	325	325	325	325	325	325	325	325
SDCF27400	325	—	—	—	—	—	—	—
SDCF27614	325	400	400	—	—	—	—	—
SDCF27778	325	400	400	400	—	—	—	—
SDCF27912	325	400	400	400	400	—	—	—
SDCF271100	325	400	400	400	400	400	400	—
SDCF271958	325	400	400	400	400	400	400	400
SDCF272358	325	400	400	400	400	400	400	400
0.50 ≤ SG								
SDCF22434	425	—	—	—	—	—	—	—
SDCF22512	425	425	—	—	—	—	—	—
SDCF22614	425	425	425	—	—	—	—	—
SDCF22700	425	425	425	550	—	—	—	—
SDCF22858	425	425	425	550	550	—	—	—
SDCF221014	425	425	425	550	550	—	—	—
SDCF221134	425	425	425	550	550	550	550	—
SDCF221334	425	425	425	550	550	550	550	550
SDCF27400	425	—	—	—	—	—	—	—
SDCF27614	425	650	650	—	—	—	—	—
SDCF27778	425	650	650	650	—	—	—	—
SDCF27912	425	650	650	650	650	—	—	—
SDCF271100	425	650	650	650	650	650	650	—
SDCF271958	425	650	650	650	650	650	650	650
SDCF272358	425	650	650	650	650	650	650	650

1. The main member and side members must be sawn lumber, glulam, or CLT with an assigned specific gravity (SG) as shown in the table above or an engineered wood product with a minimum grade of 1.3E and equivalent SG of at least 0.50.
2. Tabulated reference allowable lateral design values (Z) must be multiplied by all applicable adjustment factors, including the load duration factor, C_D, from the NDS as referenced in the IBC or IRC.
3. Screws must be installed into the face or side grain of the wood main member with the screw axis at a 90-degree angle to the wood surface.
4. Minimum fastener penetration must be equal to the screw length less the thickness of the wood side member.
5. Tabulated reference lateral design values apply to combinations of parallel- and perpendicular-to-grain loading.

C-F-2023TECHSUP © 2023 Simpson Strong-Tie Company Inc.

Strong-Drive®
SDCF TIMBER-CF Screw (cont.)

SDCF TIMBER-CF Screw — Allowable Withdrawal Design Values

Fastener Designation	Screw Length (in.)	Thread Length (in.)	Minimum Embedded Thread Length (in.)	Reference Allowable Lateral Design Value, W (lbf/in.)	
				0.42 ≤ SG < 0.50	0.50 ≤ SG
SDCF22434	4.72	4.29	3	200	265
SDCF22512	5.51	5.08			
SDCF22614	6.3	5.87			
SDCF22700	7.09	6.65			
SDCF22858	8.66	8.23			
SDCF221014	10.24	9.8			
SDCF221134	11.81	11.38			
SDCF221334	13.78	13.35			
SDCF27400	3.94	3.66	3	200	265
SDCF27614	6.3	6.02			
SDCF27778	7.87	7.6			
SDCF27912	9.45	9.17			
SDCF271100	11.02	10.75			
SDCF271958	19.69	19.41			
SDCF272358	23.62	23.35			

1. The tabulated reference allowable withdrawal design value, W, is in pounds per inch of the thread penetration into the side grain or face grain of the main member. Thread penetration is the portion of the threaded length held in the main member, including the screw point.
2. The tabulated reference withdrawal design value, W, is given for a load duration of C_D=1.0 and must be multiplied by all applicable adjustment factors from the NDS as referenced in the IBC or IRC.
3. Wood main members must have an assigned specific gravity (SG) as indicated in the table above or for engineered wood products, a minimum grade of 1.3E and equivalent SG of 0.50.
4. Reference allowable withdrawal values are for screws installed normal to the side grain of the wood members.

SDCF22 Withdrawal from CLT at 45° to the Y Surface

Withdrawal resistances from SPF and DF CLT were evaluated with the SDCF22 screws. Withdrawal resistance at 45° to the Y surface (90°) can be calculated using the reference withdrawal from the Y face (90°). The adjustments are the same for both orientations shown in the figure where the CLT orientation is based on the grain orientation of the surface laminates and follows that in ASTM D5456 for SCL. Minimum embedment length is 10D, where D is the major diameter, 0.315".

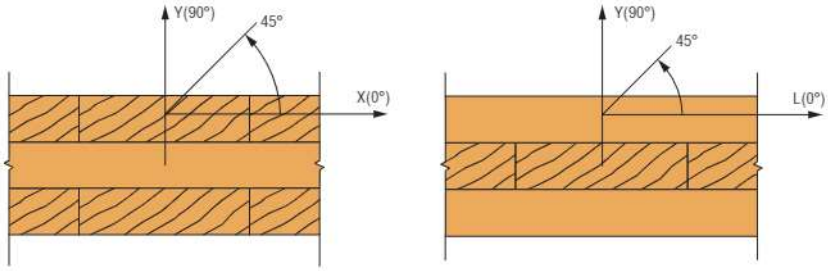

Withdrawal at 45° to YX Plane

Withdrawal at 45° to YL Plane

Figure 1: Withdrawal in the YX and YL orientations for CLT where CLT orientation is based on the orientation of the surface laminates.

Specific Gravity (G)	Reference W (lb./in.) at 90°	45° Adjustment	Reference W at 45° (lb./in.)
0.42 ≤ G < 0.50	200	0.80	180
0.50 ≤ G	265	0.80	212

Minimum embedment length is 3.15".

C-F-2023TECHSUP © 2023 Simpson Strong-Tie Company Inc.

Strong-Drive®
SDCF TIMBER-CF Screw (cont.)

SDCF TIMBER-CF Screw — Allowable Head Pull-Through Design Values (W_H)

Fastener Designation	Side Member Thickness (in.)	Reference Pull-Through Design Value, W_H (lb.)	
		0.42 ≤ SG < 0.50	0.50 ≤ SG
SDCF22434	1.5	320	360
SDCF22512			
SDCF22614			
SDCF22700			
SDCF22858			
SDCF221014			
SDCF221134			
SDCF221334			
SDCF27400	1.5	320	360
SDCF27614			
SDCF27778			
SDCF27912			
SDCF271100			
SDCF271958			
SDCF272358			

1. The side member must be solid-sawn lumber, glulam or CLT with an assigned specific gravity (SG) as indicated in the table above or for engineered wood products a minimum grade of 1.3E and equivalent SG of 0.50.
2. Tabulated reference allowable pull-through design values (W_H) must be multiplied by all applicable adjustment factors, including the load duration factor, C_D, from the NDS as referenced in the IBC or IRC.
3. Screws must be installed into the face or side grain of the wood side member with the screw axis at a 90° angle to the wood surface.

C-F-2023TECHSUP © 2023 Simpson Strong-Tie Company Inc.

Strong-Drive®
SDCF TIMBER-CF Screw (cont.)

SDCF Screws Connection Geometry

Condition	Direction of Load to Grain	ID	Minimum Distance or Spacing (in.)
Edge Distance	Perpendicular	①	1¾
	Parallel	①	1¾
End Distance	Perpendicular	②	6
	Parallel	②	6
Spacing Between Fasteners in a Row	Perpendicular	③	4
	Parallel	④	8
Spacing Between Rows of Fasteners	Perpendicular	⑤	4
	Parallel	⑥	4
Spacing Between Staggered Rows	Perpendicular or Parallel	⑦	⅝

1. For SDCF22 screws subject to axial loading only, use the following minimum dimensions: end distance = 3¼", edge distance = 1⅜", spacing parallel to grain = 2¼", spacing perpendicular to grain = 1⅜".
2. For SDCF27 screws subject to axial loading only, use the following minimum dimensions: end distance = 4", edge distance = 1⅝", spacing parallel to grain = 2⅞", spacing perpendicular to grain = 2".

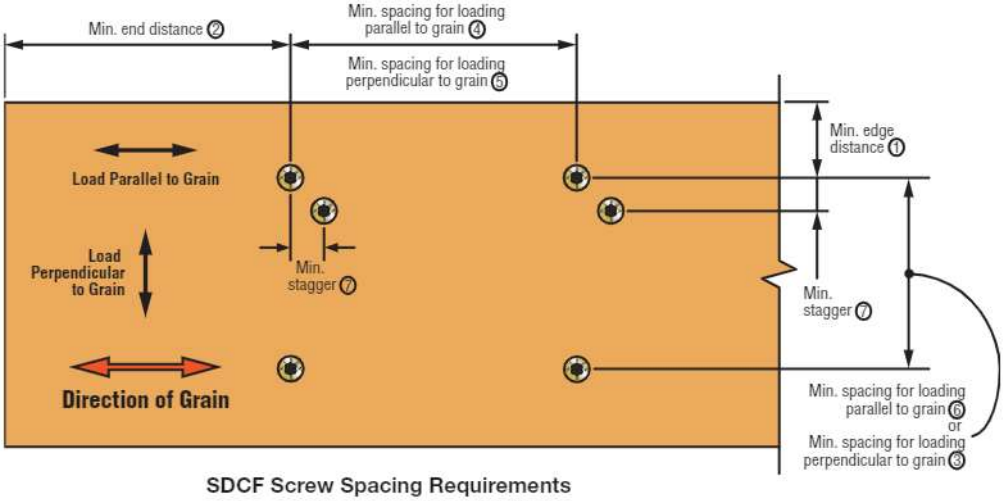

SDCF Screw Spacing Requirements

Compression Reinforcement

Strong-Drive SDCF TIMBER-CF Screws used for Compression Reinforcement Perpendicular to Grain in Glued-Laminated Timber (Glulam), Cross-Laminated Timber (CLT), and Heavy Timbers

Reinforcement perpendicular to grain may be needed in mass timber construction when large concentrated loads must be resisted or when there is a design need to minimize bearing area. Simpson Strong-Tie has evaluated the use of fully-threaded screws for the purpose of mechanical reinforcement perpendicular to the grain in glulam, CLT, and heavy timber. It has been shown that SDCF Timber-CF fully-threaded screws (SDCF22 and SDCF27) can be used for compression reinforcement perpendicular to grain.

The design practice for reinforcement perpendicular to grain using self-tapping, fully-threaded screws was developed in Europe for use with the Eurocode, which is a version of limit states design. Since the design practice was published, the method has been recited in many European Technical Assessments for European screw manufacturers and is being used by European engineers.

See TEB-F-SDCFCOMP for complete details and examples of the design practice that is compatible with the NDS and allowable stress methodology.

Also note, Installation Torque and Tools for Simpson Strong-Tie Strong Drive SDCF TIMBER-CF Screws and SDCP TIMBER-CP Screws (8 mm diameter).

Simpson Strong-Tie evaluated the the alowable installation torque and the effect of driver tools on the SDCF Timber-CF and SDCP TIMBER-CP screws and the connections. For specifics on testing, limitations, and installation torques, see engineering letter L-F-MTINSTALL22.

C-F-2023TECHSUP © 2023 Simpson Strong-Tie Company Inc.

Strong-Drive®

SDCF **TIMBER-CF** and SDCP **TIMBER CP** Seating Torque for Wood-to-Wood and Steel-to-Wood Connections

The SDCF22 and SDCP22 screws are used for wood-to-wood and steel-to-wood connections. The tightness (expressed by seating torque) and the effects of installation tool (drill motor and impact driver) were evaluated.

For the purposes of this discussion, the seating torque is the torsional load on the screw when the screw is driven tight to the side member. Seating torque is directly related to clamping force and tension force in the screw. When driven "tight," the screw head is countersunk for wood side members (top of head is flush with surface of side member). In a steel-to-wood connection, the steel member is the side member of the connection. It is predrilled and has a countersunk surface to receive the screw head in bearing when the head is driven into contact with the steel side member. For SDCF22 screws, allowable seating torque is controlled by allowable withdrawal or allowable screw tensile strength depending on wood specific gravity and screw length. Allowable seating torque is controlled by the allowable steel tensile strength for SDCF22 screws that are 10¼" and longer. For all SDCP22 screws, allowable seating torque is controlled by allowable withdrawal resistance. For softwood side members, the heads of the SDCF22 and SDCP22 should be countersunk so that the top of the head is flush to the surface of the side member. However, when driving to a steel side member, seating torques should be limited as shown in Table 1.

For more information, see p. 96 (SDCF) and p. 98 (SDCP), C-F-2023 *Fastening Systems* catalog

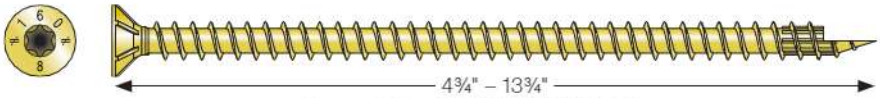

Strong-Drive SDCF TIMBER-CF Screw

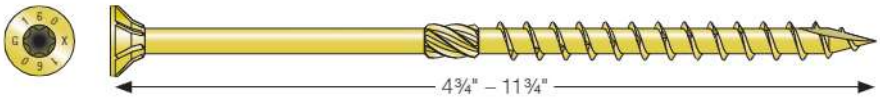

Strong-Drive SDCP TIMBER-CP Screw

Recommended Seating Torque (lb.-in.) for SDCF22 and SDCF22 Screws Driven to Steel Side Members

Model	Screw Length (in.)	Recommended Seating Torques (lb.-in.)	
		0.42 ≤ G < 0.50	0.50 ≤ G
SDCF22434	4¾	95	125
SDCF22512	5½	110	145
SDCF22614	6¼	130	170
SDCF22700	7	150	190
SDCF22858	8⅝	180	220
SDCF221014 and longer	10¼	220	220
SDCP22434 and longer	4 ¾ and longer	70	75

1. For recommended seating torques for SDCF27, SDCP27, SDHR27, and SDHR31, see L-F-MTINSTALL22.

The effects of installation tools were evaluated by installing SDCF22 and SDCP22 screws in wood-to-wood and steel-to-wood connections with either a drill motor or an impact driver tool. The properties evaluated were withdrawal resistance, seating torque, and tensile strength of the screws. The testing used wood that was air-dry (moisture content approximately 10%) and the species combinations used for testing were spruce-pine-fir and Douglas fir–larch. The impact driver tool had a hammer frequency of 0-3,600 impacts per minute. Screws were driven at the maximum clutch settings on the tools.

Testing showed that the withdrawal resistance of the connection and the tensile strength of the screws were not affected by the driver tool. When using the impact driver tool to drive screws for wood-to-wood connections, caution must be exercised to prevent countersinking deeper than the top of head being flush to the wood side member surface. For steel-to-wood connections, the impact driver tool can seat the screw at a seating torque that exceeds the allowable seating torque for screws shorter than 8⅝", and this can strip the wood thread path and damage withdrawal resistance of the screw. As a result, the impact driver tools should have a clutch setting that is calibrated so that allowable seating torque is not exceeded.

In summary, SDCF22 and SDCP22 screws up to 10¼" can be driven to the allowable seating torques with either drill motors or impact driver tools in air-dry wood materials. The use of impact driver tools for wood-to-wood connections requires special attention to prevent overdriving, and for steel-to-wood connections, caution is needed to prevent exceeding the allowable seating torque. For SDCF22 and SDCP22 screws longer than 10¼", a drill motor should be used for installation.

C-F-2023TECHSUP © 2023 Simpson Strong-Tie Company Inc.

Structural Screw Applications

Simpson Strong-Tie evaluated the following screws for use in cross-laminated timber (CLT) butt-joint and half-lap diaphragm connections:

- Strong-Drive® SDWC TRUSS Screw (SDWC15600, see p. 103, C-F-2023 *Fastening Systems* catalog)
- Strong-Drive SDWS TIMBER Screw (Exterior Grade — SDWS22400DB and SDWS22600DB, see p. 59, C-F-2023 *Fastening Systems* catalog)
- Strong-Drive SDWS TIMBER Screw (Interior Grade — SDWS19600, see p. 102, C-F-2023 *Fastening Systems* catalog)
- Strong-Drive SDWV SOLE-TO-RIM Screw (SDWV13400, see p. 107, C-F-2023 *Fastening Systems* catalog)

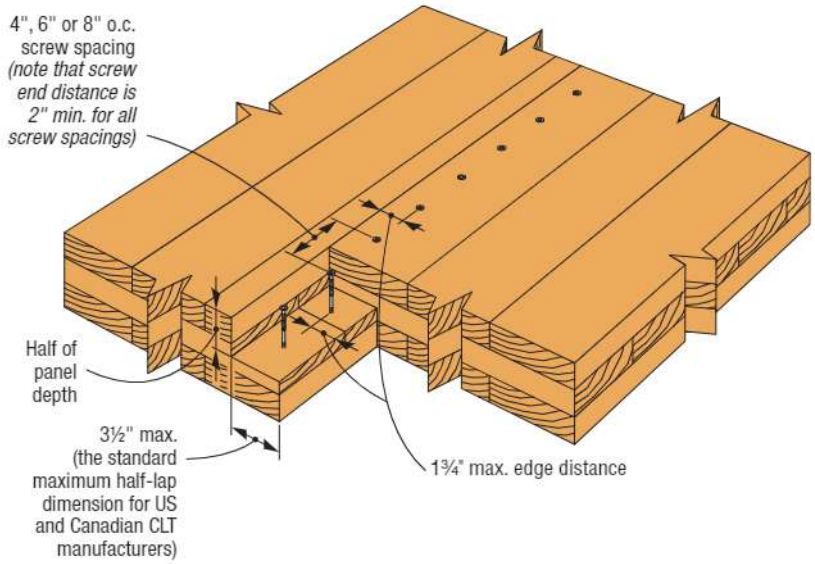

Typical Half-Lap Installation with SDWV13400Z Screws in Three-Ply CLT Panel

(SDWS22400DB in three ply, and SDWS19600 in five ply or seven ply similar)

SDWS22 *(exterior grade)*

SDWS19 *(interior grade)*

SDWV

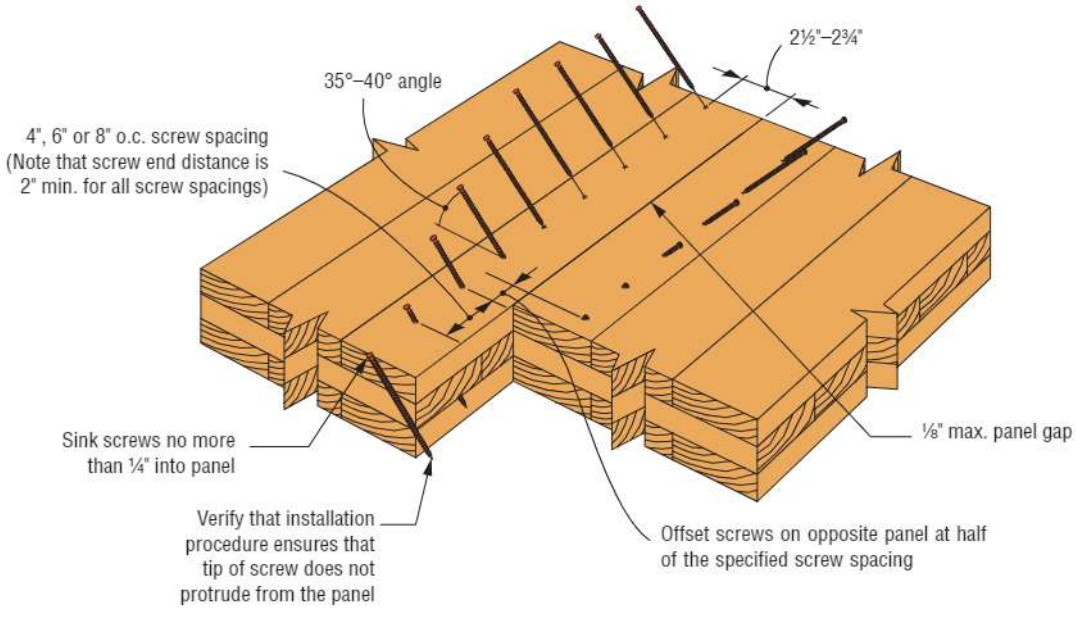

Typical Butt-Joint SDWC15600 Installation with Three-Ply CLT

SDWC15600

C-F-2023TECHSUP © 2023 Simpson Strong-Tie Company Inc.

SDWC Truss Screw, SDWS22 Timber Screw, SDWS19 Timber Screw — Allowable Shear Loads for CLT Diaphragm Butt and Half-Lap Joints

Diaphragm Joint	CLT Layup	Fastener Model No. (Length) (in.)	Screw Spacing (in.)	Reference Allowable Shear Loads (lb./ft.)		e_n (in.)
				DFL/SP	SPF/HF	
Butt joint	Three ply	SDWC15600 (6)	4	1,440	1,440	0.077
			6	960	960	
			8	720	720	
Half-lap	Three ply	SDWS22400 (4)	4	1,035	780	0.048
			6	690	520	
			8	520	390	
		SDWV13400 (4)	4	555	480	0.028
			6	370	320	
			8	280	240	
	Five ply	SDWS22600 (6)	4	930	840	0.047
			6	620	560	
			8	465	420	
		SDWS19600 (6)	4	795	795	0.043
			6	530	530	
			8	400	400	

1. Allowable shear loads are shown for wood load duration $C_D = 1.0$; duration of load may be increased as permitted by the local building code up to $C_D = 1.6$.
2. For butt joints with the SDWC Truss screws, the allowable load is for a pair of screws spaced as indicated.
3. CLT laminate thickness assumed to be 1⅜".
4. DFL: Douglas fir–larch; SP: southern pine; SPF: spruce-pine-fir; HF: hem-fir. Allowable shear loads for SPF South are to be 0.85 (SPF/HF).
5. Fastener slip e_n is compatible with calculation for slip in panel-to-panel joints. The e_n value is allowable shear load per fastener (lb.)/connection stiffness (lb./in.). The SDWS connection stiffness is based on NDS calculation. The e_n value may be adjusted for loads less than allowable as the product of e_n and the ratio of design load to allowable load.

Simpson Strong-Tie has evaluated Strong-Drive SDWS Timber Screws (SDWS22400 and SDWS22600) for use in cross-laminated timber (CLT) diaphragm single-surface splines. The SDWS Timber screws are evaluated as an alternate threaded dowel fastener in evaluation report IAPMO UES ER192.

Typical installation is illustrated on the next page. The same number of SDWS Timber screws shall be used to fasten the spline to both diaphragm panels connected by the spline, and the fasteners shall be similarly spaced in both diaphragm panels of the spline connection.

C-F-2023TECHSUP © 2023 Simpson Strong-Tie Company Inc.

Mass Timber / Cross-Laminated Timber Fastening

SDWS Timber Screw — Allowable Shear Loads for 1⅛" Wood Structural Panel Surface Spline in a CLT Diaphragm

CLT Layup	Fastener Model No. (Length) (in.)	Fastener Spacing (in.)	Allowable Shear Loads per Fastener (lb./ft.)		Slip Modulus per Fastener (lb./in.)	
			DFL/SP	SPF/HF	DFL/SP	SPF/HF
Three ply	SDWS22400 (4)	8	560	505	6,700	6,700
		6	750	670	6,700	6,700
		4	1,125	1,005	6,700	6,700
Five ply, Seven ply	SDWS22600 (6)	8	560	505	6,700	6,700
		6	750	670	6,700	6,700
		4	1,125	1,005	6,700	6,700

1. Allowable loads have been increased for wind or seismic loading with no further increase allowed: reduce where other loads govern.
2. Applicable adjustments shall be applied following the ANSI/AWC NDS-15 or NDS-18.
3. Tabulated values are applicable for splines in the major and minor strength directions.
4. For SDWS solutions, use 1⅛" APA rated Sturd-I-Floor wood structural panel surface splines.
5. Screws: 4" SDWS = model SDWS22400DB; 6" SDWS = model SDWS22600DB.
6. CLT panel minimum thickness is: 3 ply = 4.125"; 5 ply = 6.875"; 7 ply = 9.625".
7. The component of diaphragm deflection due to fastener slip at panel-to-panel joints is calculated as,

$\delta_f = CLe_n$

where,

$C = (1/P_L + 1/P_w)/2$

P_L = Length of individual CLT panel (ft.)

P_w = Width of individual CLT panel (ft.)

L = Overall length of diaphragm (ft.)

e_n = Force per fastener [lb.]/Slip modulus [lb./in.]

(Reference — Applied Technology Council. 1981. *Guidelines for the Design of Horizontal Wood Diaphragms*. Redwood City, CA.)

For additional information on slip modulus, see:

1. American Wood Council. 2018. *ANSI/AWC National Design Specification for Wood Construction, NDS®*, Section 11.3.6. AWC, Leesburg, VA.
2. Zhan, J.J. 1991. *Design Equation for Multiple-Fastener Wood Connections*. US Forest Service, Forest Products Laboratory, Madison, WI.

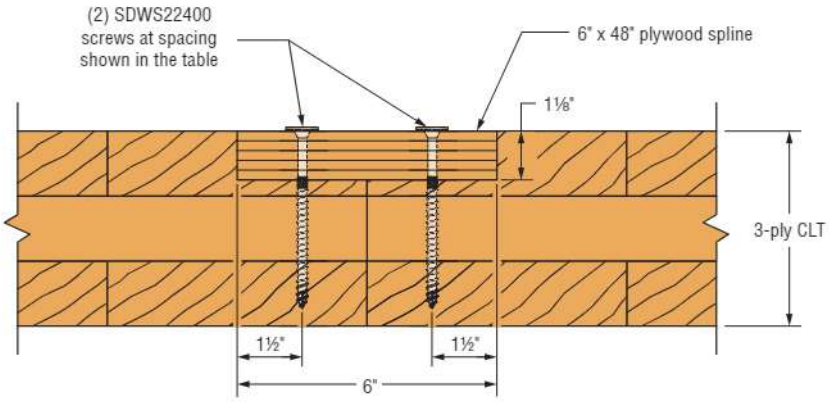

Figure 1: Typical elevation — Single-surface spline with three-ply CLT panels, 1⅛" spline (plywood shown, 6" width) and 4" SDWS TIMBER screws (SDWS22400DB).

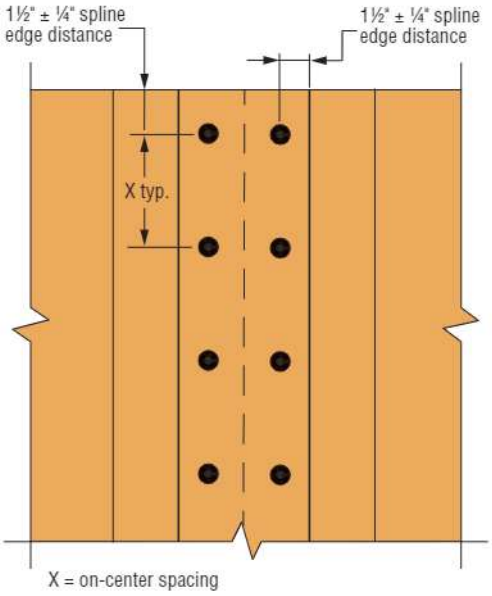

Figure 2: Fastener layout plan — Fastener end distance in the spline shall be 1.5 ± 0.25", and fastener edge distance in the spline shall be 1.5 ± 0.25". The nominal fastener spacing is "X".

C-F-2023TECHSUP © 2023 Simpson Strong-Tie Company Inc.

Strength that weathers the elements.
Deck-Drive® DWP WOOD SS Screw

Deck and Dock Applications

Fastening for Decks

Alternate Fasteners for Connection Details. 150
Deck-Drive™ DWP WOOD SS Screw 153
Deck-Drive™ DSV WOOD Screw 154
Deck-Drive™ DCU COMPOSITE Screw. 156

Deck Construction — Ledgers

Strong-Drive® SDWS TIMBER Screw 157
Strong-Drive® SDWS TIMBER SS Screw 158
Strong-Drive® SDWH TIMBER-HEX Screw. 159
Strong-Drive® SDWH TIMBER-HEX and SDWS TIMBER Screw. 160
Strong-Drive® SDWH TIMBER-HEX HDG Screw 162
Strong-Drive® SDWH TIMBER-HEX SS Screw. 164
Strong-Drive® SDS HEAVY-DUTY CONNECTOR Screw 166
Strong-Drive® SDS, SDWS and SDWH Applications 167

Deck Construction — Guard Posts

Strong-Drive® SDWS TIMBER Screw 170
Strong-Drive® SDWS FRAMING Screw 174

Deck Construction — Wood Balusters

Fasteners for Wood Baluster Installations. 176

Deck Construction — Beam-to-Post

Strong-Drive® SDWH TIMBER-HEX HDG Screw 178

Dock Applications

Strong-Drive® SDWH TIMBER-HEX HDG Screw 179

Alternate Fasteners for Connection Details in AWC DCA6 with Simpson Strong-Tie Strong-Drive® Screws

The American Wood Council (AWC) publication, *Prescriptive Residential Wood Deck Construction Guide* (DCA6-2018), which is based on the 2015 International Residential Code, provides prescriptive deck construction details and requirements for decks built for one- and two-family dwellings.

The details given here are for fastener connections for beam-to-post, diagonal bracing, and sistered-stair stringer connections that have been designed and analyzed for use as alternates to those included in DCA6 subject to approval by the local building department. Wet service was included in the analysis. For more information, refer to technical bulletin T-C-DCA6DECK21.

Beam-to-Post Connection

DCA6 Figure 8A details the attachment of a beam to a notched post, with two ½"-diameter through bolts with washers as the connection to resist uplift and lateral displacement.

Simpson Strong-Tie tested beam-to-notched post assemblies fastened with Strong-Drive Timber screws (SDWS22500DB), Timber-Hex HDG screws (SDWH27400G), and Timber stainless-steel screws (SDWS27500SS) and compared the lateral capacities to the prescriptive bolted connection. The table lists the respective quantities for each Strong-Drive screw type that are equivalent to the two ½"-diameter through bolts that are shown in DCA6 Figure 8A. Figures 1 through 4 show the screw fastening patterns at spliced and nonspliced connections.

Strong-Drive Screws Equivalent to DCA6 Figure 8A Prescribed Through Bolts

Length (in.)	Model No.	Quantity Required	
		Spliced	Non-Spliced
5	SDWS22500DB	6 / Figure 1	3 / Figure 2
4	SDWH27400G	6 / Figure 1	3 / Figure 2
5	SDWS27500SS	8 / Figure 3	4 / Figure 4

1. Material: Hem-Fir minimum.
2. Post Size: If the post size is larger than 6x6 (nominal), substitute longer screw lengths to achieve the same penetration into the post and beam.
3. SDWH27400G: Only applies to a 3x beam.

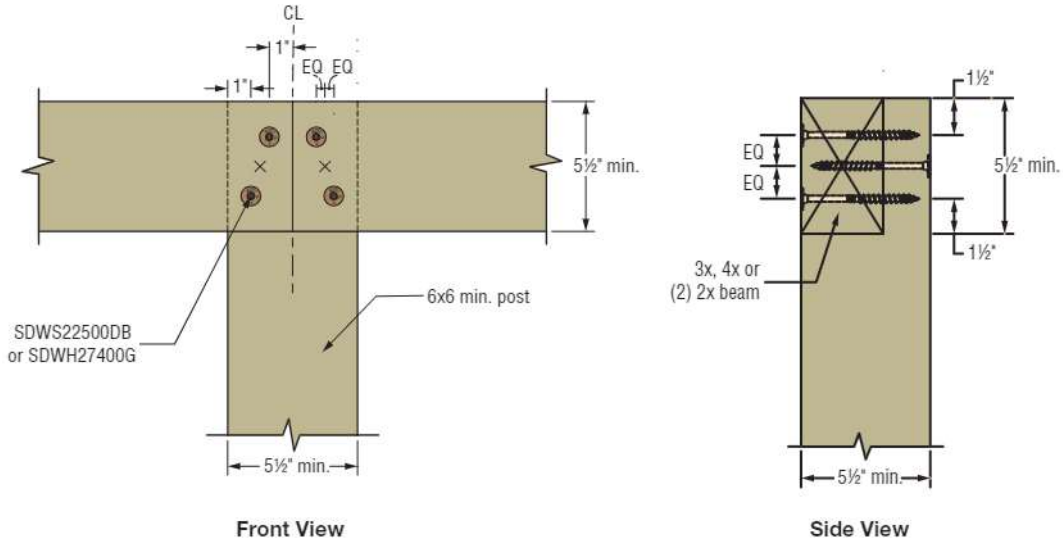

Figure 1: Beam-to-Notched-Post Fastened with SDWS22500DB or SDWH27400G Screws (Spliced)

C-F-2023TECHSUP © 2023 Simpson Strong-Tie Company Inc.

Alternate Fasteners for Connection Details in AWC DCA6 with Simpson Strong-Tie Strong-Drive® Screws (cont.)

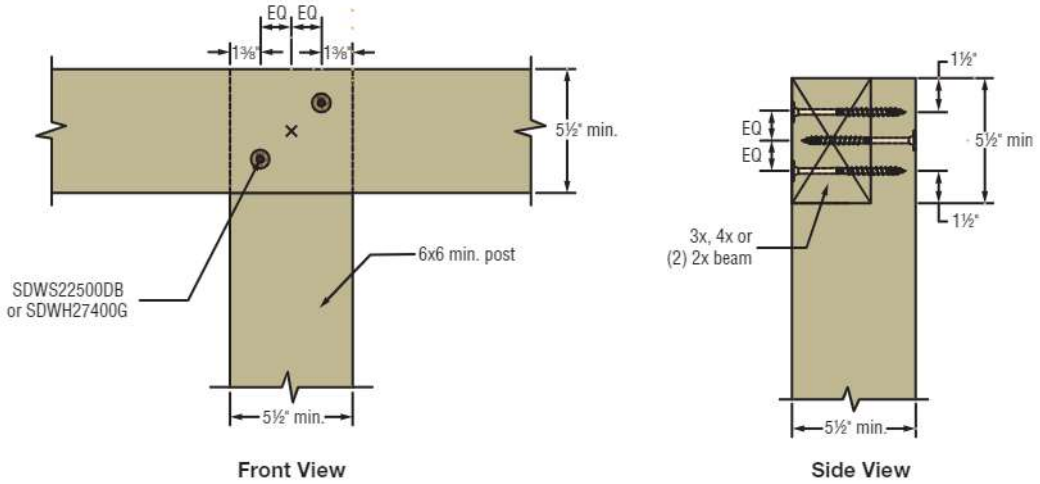

Figure 2: Beam-to-Notched-Post Fastened with SDWS22500DB or SDWH27400G Screws (Non-Spliced)

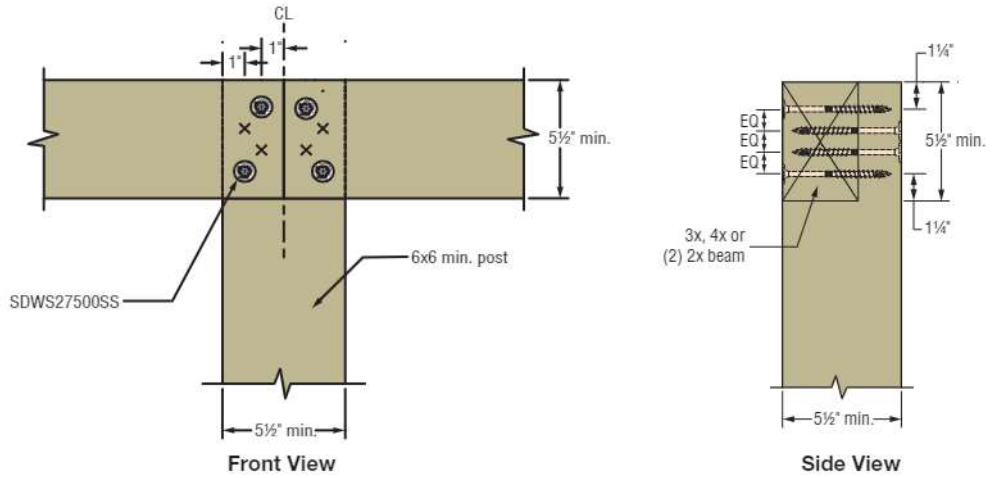

Figure 3: Beam-to-Notched-Post Fastened with SDWS27500SS Screws (Spliced)

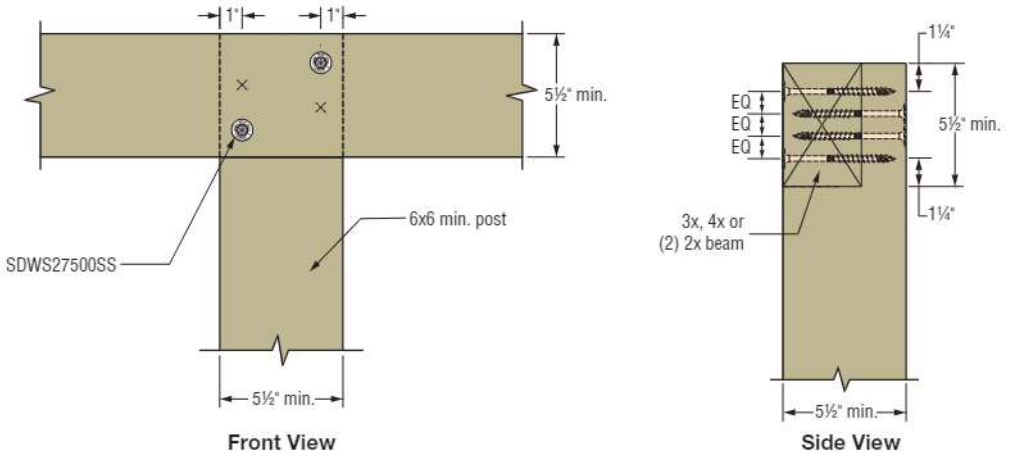

Figure 4: Beam-to-Notched-Post Fastened with SDWS27500SS Screws (Non-Spliced)

C-F-2023TECHSUP © 2023 Simpson Strong-Tie Company Inc.

Alternate Fasteners for Connection Details in AWC DCA6 with Simpson Strong-Tie Strong-Drive® Screws (cont.)

Diagonal Brace Connection

DCA6 Figure 10 shows the detail of fastening diagonal bracing to the deck post and beam with a ½"-diameter lag screw and washer at each end of the brace.

Simpson Strong-Tie evaluated diagonal bracing with Strong-Drive Timber screws (SDWS22400DB), Timber-Hex HDG screws (SDWH27400G), and Timber stainless-steel screws (SDWS27400SS). The connection capacity of the Timber screws was compared to the connection capacity of prescriptive lag screws with washers. Based on the test data and engineering analysis, a direct 1:1 substitution with one SDWS22400DB or one SDWH27400G, or one SDWS27400SS can be used in lieu of prescriptive ½" lag screws with washers. See Figure 5 for details.

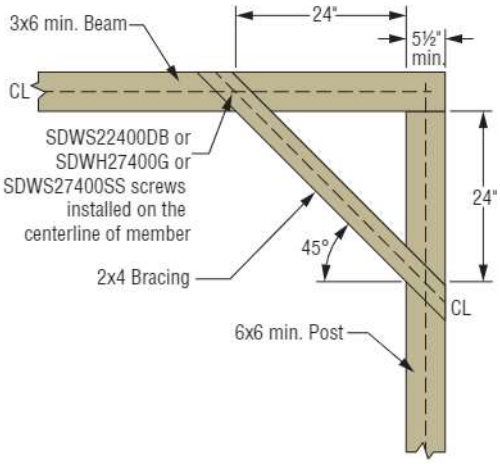

Figure 5: Diagonal Bracing Connection with SDWS22400DB, SDWH27400G or SDWS27400SS Screws

Sistered Stair Stringers

DCA6 Figure 28 details the typical stair stringer requirements. The typical stair system consists of three 2x12 cut/notched stringers, which support the minimum width of 36" and a stair span length maximum of 6'-0". However, when the span is greater than 6'-0" and less than 13'-3", the stair system does not meet the deflection requirements of L/288 (¼" deflection). To stiffen the notched stair stringer, one solution is to sister a solid (uncut/un-notched) 2x12 to the outside of the cut/notched 2x12 stringers at the ends of the stair treads. The load path is from the tread to the cut stringers and then to the solid stringers by means of screw fastening.

Simpson Strong-Tie evaluated the sistered-stringer connection, and the recommendation for sistering cut stringers to solid stringers is to use one row of SDWS22300DB or SDWS27300SS installed at 18" on-center spacing and staggered as shown in Figure 6.

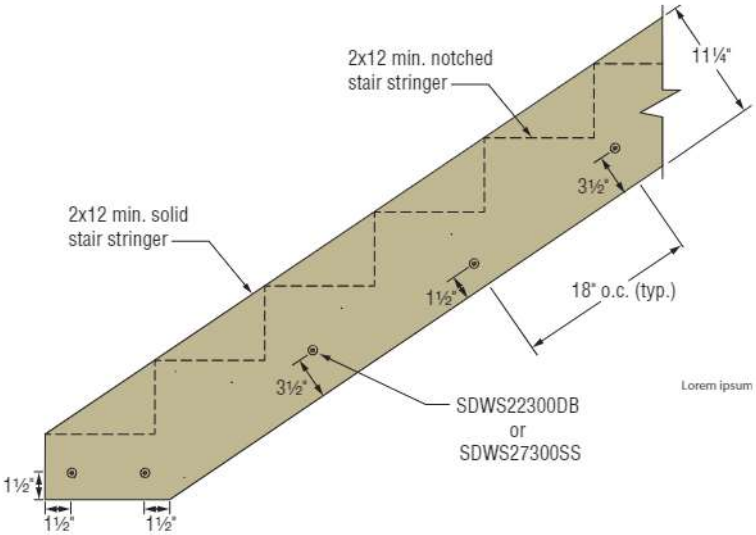

Figure 6: Solid Stair Stringer-to-Cut Stringer Connection with SDWS22300DB or SDWS27300SS Screws

C-F-2023TECHSUP © 2023 Simpson Strong-Tie Company Inc.

Deck-Drive™ DWP WOOD SS Screw

High- to Severe-Exposure Wood Decking Applications

The #10 Deck-Drive DWP Wood SS flat-head screws are deck fasteners that have been tested in accordance with ICC-ES Acceptance Criteria AC233 and are load rated for withdrawal resistance. These screws are a great solution for exterior connections where they will be exposed to high or severe corrosion.

For more information, see p. 72, C-F-2023 *Fastening Systems* catalog
See pp. 49–50 for allowable shear and withdrawal for #12 and #14 Strong-Drive® DWP WOOD SS screws.

DWP WOOD SS Screw — Allowable Withdrawal and Pull-Through Loads

Size x Length (in.)	Model No.	Thread Length (in.)	Head Dia. (in.)	Allowable Screw Tension (lb.)	Reference Withdrawal, W (lb./in.)		Reference Pull-Through for 1½" Side Memeber, W_H (lb.)	
					DFL/SP	SPF/HF	DFL/SP	SPF/HF
#10 x 2	T10200WP S10200WP	1.50	0.34	480	130	100	140	110
#10 x 2½	T10250WP S10250WP	2.00						
#10 x 3	T10300WP S10300WP	2.16						
#10 x 3½	T10350WP S10350WP	2.49						

1. The tabulated allowable screw tension value is the tensile strength of the steel screw and may not be multiplied by any adjustment factors.
2. The tabulated reference withdrawal design value, W, is in pounds per inch of the thread penetration into the side grain of the main member.
3. The tabulated reference pull-through design value, W_H, is the allowable load for the fastener head pull-through for a minimum 1½" thick side member.
4. Tabulated reference withdrawal and pull-through design values, W and P, are shown at a load duration factor, $C_D = 1.0$ and a wet service factor, $C_M = 1.0$. Loads may be increased for load duration per the building code up to a $C_D = 1.6$. Tabulated values must be multiplied by all applicable adjustment factors from the NDS as referenced in the IBC or IRC.
5. Embedded thread length is that portion held in the main member including the screw tip.

C-F-2023TECHSUP © 2023 Simpson Strong-Tie Company Inc.

Deck-Drive™
DSV **WOOD** Screw

Multipurpose deck and other wood-to-wood applications

Simpson Strong-Tie #10 Deck-Drive DSV wood screws are designed for preservative-treated decking applications and can also be used for general framing and construction with wood and engineered wood products. Quik Guard® coating on the DSV screws provides corrosion resistance for exterior and certain preservative-treated wood applications. The DSV screws have a 6-lobe drive with flat head and do not require predrilling for softer woods. The screws have been tested and evaluated in accordance with ICC-ES Acceptance Criteria AC233 (*Acceptance Criteria for Dowel-type Threaded Fasteners Used in Wood*), and are load rated for shear, pull-through and withdrawal resistance. The tables below provide load information for the DSV screws.

For more information, see p. 76, C-F-2023 *Fastening Systems* catalog

DSV WOOD Screw — Allowable Shear Loads

Size x Length (in.)	Model No.	Thread Length (in.)	DFL/SP Reference Allowable Shear Load (lb.)				SPF/HF Reference Allowable Shear Load (lb.)			
			Side Member Thickness (in.)				Side Member Thickness (in.)			
			1.5	2.0	2.5	3.0	1.5	2.0	2.5	3.0
#10 x 2½	DSV212	1.50	106	—	—	—	83	—	—	—
#10 x 3	DSV3	1.50	173	99	—	—	131	80	—	—
#10 x 3½	DSV312	2.00	173	173	99	—	131	131	80	—
#10 x 4	DSV4	2.50	173	173	173	99	131	131	131	80

1. Allowable loads are based on full penetration into the main member. Full penetration is the screw length minus the side member thickness.
2. Allowable loads are shown at the wood load duration factor of $C_D = 1.0$. Loads may be increased for load duration per the building code up to a $C_D = 1.6$. Tabulated values must be multiplied by all applicable adjustment factors per the NDS. For DSV in-service moisture content greater than 19%, use $C_M = 0.62$.
3. Loads are based on installation into the side grain of the wood with the screw axis perpendicular to the face of the member.
4. Loads are based on tests of connections made with same species as main and side members. For connections with mixed species, use the loads for the species with the lower specific gravity.
5. Engineered wood must have a minimum modulus of elasticity grade of 0.80E and a minimum equivalent specific gravity of at least 0.50 to use the DFL/SP values, or 0.42 to use the SPF/HF values.

C-F-2023TECHSUP © 2023 Simpson Strong-Tie Company Inc.

Deck-Drive™
DSV **WOOD** Screw (cont.)

DSV WOOD Screw — Allowable Withdrawal and Pull-Through Loads

Size x Length (in.)	Model No.	Thread Length (in.)	Reference Allowable Withdrawal, W (lb./in.)		Reference Allowable Withdrawal, W_{max} (lb./in.)		Reference Pull-Through, W_H (lb.)	
			DFL/SP	SPF/HF	DFL/SP	SPF/HF	DFL/SP	SPF/HF
#10 x 2	DSV2	1.25	121	94	150	115	174	154
#10 x 2½	DSV212	1.50			180	140		
#10 x 3	DSV3	1.50			180	140		
#10 x 3½	DSV312	2.00			240	190		
#10 x 4	DSV4	2.50			300	235		

1. The tabulated Reference Allowable Withdrawal design value, W, is in pounds per inch of the thread penetration into the side grain of the main member.
2. The tabulated Reference Maximum Withdrawal design value, W_{max}, is in pounds where the entire thread length is embedded into the side grain of the main member.
3. Reference withdrawal design values, W and W_{max}, are shown at C_D = 1.0. Loads may be increased for load duration per the building code up to C_D = 1.6. Tabulated values must be multiplied by all applicable adjustment factors from the NDS. For DSV in-service moisture content greater than 19%, use C_M = 0.70.
4. Embedded thread length is that portion of the end threads in the main member, including the screw tip.
5. Reference Pull-Through, W_H, values are based on pull-through of a 1½"-thick side member, and C_D = 1.0.
6. Engineered wood must have a minimum modulus of elasticity grade of 1.55E and a minimum equivalent specific of at least 0.50 to use the DFL/SP values, or 0.42 to use the SPF/HF values.

Connection Geometry

Condition			Minimum Distance or Spacing (in.)	Reduction Factor
Edge Distance	Perpendicular to grain loading		¾	0.91
	Parallel to grain loading		½	1.00
End Distance	Perpendicular to grain loading		4	0.91
	Parallel to grain loading		4	1.00
Spacing Between Fasteners in a Row	Perpendicular to grain loading		2	0.75
	Parallel to grain loading		2	1.00
Spacing Between Row	Perpendicular to grain loading	Non-staggered row	1	0.75
		Staggered rows	1	1.00
	Parallel to grain loading	Non-staggered row	1	0.88
		Staggered rows	1	1.00

1. Edge distances, end distances, and spacing of the screws must be sufficient to prevent splitting of the wood, or as required by this table, or when applicable as recommended by the structural composite lumber manufacturer, whichever is the most restrictive.
2. Allowable shear loads shall be multiplied by the applicable tabulated reduction factors when used in the corresponding geometry.

C-F-2023TECHSUP © 2023 Simpson Strong-Tie Company Inc.

Deck-Drive™ DCU COMPOSITE Screw

Uplift Performance

For more information, see pp. 90–91, C-F-2023 *Fastening Systems* catalog

The table below shows allowable uplift loads for Simpson Strong-Tie Deck-Drive DCU Composite screws (#10 dia. x 2¾" length, model no. DCU234) when they are used to attach non-wood deck boards to framing in face screw installations.

In an uplift scenario, there are two relevant modes of failure for screw connections in deck boards: screw pull-through of the deck board and screw withdrawal from the framing member. Pull-through testing was performed using 1" nominal thickness PVC and 1" and 2" nominal thickness Composite and High-Density Polyethylene (HDPE) decking products. The tests included conditions where the DCU composite screws were installed both flush to the surface and countersunk for the use of the Deck-Drive DCU screw plug solution, as shown in the figures below. Withdrawal testing was performed with the DCU screw embedded 1⅜" in southern pine lumber. The resulting allowable loads using a factor of safety of 5 are provided in the table below.

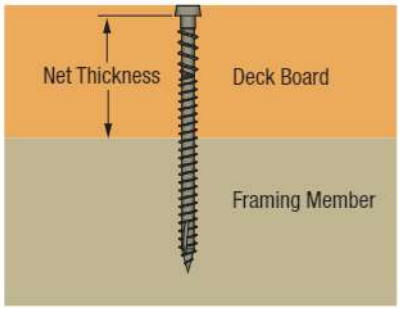

Flush Installation of DCU Composite Screw

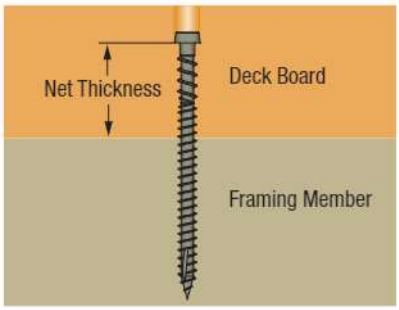

Countersunk Installation of DCU Composite Screw

DCU COMPOSITE Screw — Allowable Uplift for PVC, Composite, and HDPE Deck Boards Fastened to Southern Pine Framing

Configuration	Deck Board (Nominal Thickness, Material)	Net Thickness (in.)	Allowable Uplift per Screw (lbf)
Flush Installation	1" PVC	1.000	101
	1" Composite	1.000	148
	1" HDPE	1.000	93
	2" Composite	1.375	260
	2" HDPE	1.375	191
Countersunk Installation	1" PVC	0.725	77
	1"Composite	0.725	128
	1" HDPE	0.725	77
	2" Composite	1.100	235
	2" HDPE	1.100	150

1. Allowable uplift is limited by fastener pull-through value, which is the lessor of fastener pull-through and withdrawal. No other properties of the deck materials or deck construction are considered.
2. Withdrawal property is based on duration of load of $C_D = 1.6$ and wet service factor of $C_M = 0.7$.

C-F-2023TECHSUP © 2023 Simpson Strong-Tie Company Inc.

Strong-Drive®
SDWS **TIMBER** Screw (Exterior Grade)

For more information, see p. 59, C-F-2023 *Fastening Systems* catalog

SDWS Timber Screw — 2021 and 2018 IRC Compliant Spacing for a Sawn Lumber Deck Ledger-to-Rim Board

Loading Condition	Nominal Ledger Size (in.)	Length (in.)	Model No.	Rim Board Material and Minimum Size	Maximum Deck Joist Span						
					Up to 6 ft.	Up to 8 ft.	Up to 10 ft.	Up to 12 ft.	Up to 14 ft.	Up to 16 ft.	Up to 18 ft.
					Maximum On-Center Spacing of Fasteners (in.)						
40 psf Live 10 psf Dead	2x	4	SDWS22400DB	1" OSB	14	10	8	7	6	5	5
				1" LVL							
				1⅛" OSB	16	12	10	8	7	6	5
				1 5/16" LVL							
				1¼" LSL							
				2x SP, DFL — 2x SPF, HF	22	16	13	11	9	8	7
60 psf Live 10 psf Dead	2x	4	SDWS22400DB	1" OSB	10	7	6	5	4	4	—
				1" LVL							
				1⅛" OSB	12	9	7	6	5	4	4
				1 5/16" LVL							
				1¼" LSL							
				2x SP, DFL — 2x SPF, HF	15	12	9	8	7	6	5
40 psf Live 10 psf Dead	(2) 2x	5	SDWS22500DB	1" OSB	15	12	9	8	7	6	5
				1" LVL							
				1⅛" OSB	16	12	10	8	7	6	5
				1 5/16" LVL							
				1¼" LSL							
				2x SP, DFL — 2x SPF, HF	16	12	10	8	7	6	5
60 psf Live 10 psf Dead	(2) 2x	5	SDWS22500DB	1" OSB	11	8	7	6	5	4	4
				1" LVL							
				1⅛" OSB	12	9	7	6	5	4	4
				1 5/16" LVL							
				1¼" LSL							
				2x SP, DFL — 2x SPF, HF	12	9	7	6	5	4	4

1. SDWS screw spacing values are equivalent to 2021/2018 IRC Table R507.9.1.3(1) and 2015 IRC Table R507.2. The table also provides SDWS screw spacing for a wide range of materials commonly used for rim board, and an alternate loading condition as required by some jurisdictions.
2. Sawn lumber rim board shall be spruce-pine-fir, hem-fir, Douglas fir–larch, or southern pine species. Ledger shall be hem-fir, Douglas fir–larch, or southern pine species.
3. Fastener spacings are based on the lesser of single fastener ICC-ES AC233 testing of the Strong-Drive SDWS Timber screw with a safety factor of 5.0 or ICC-ES AC13 assembly testing with a factor of safety of 5.0. Spacing includes NDS wet service factor adjustment.
4. Multiple ledger plies shall be fastened together per code independent of the SDWS screws.
5. Screws shall be placed 1.5" to 2" from the top and bottom of the ledger or rim board with 3" minimum and 6" maximum vertical distance between fasteners with horizontal on-center spacing per the table. End screws shall be located 6" from the end and at 1.5" to 2" from the bottom of the ledger. For screws located at least 2" but less than 6" from the end, use 50% of the load per screw and 50% of the table spacing between the end screw and the adjacent screw, and for screws located between 2" and 4" from the end, predrill using a 5/32" drill bit.
6. Structural sheathing between the ledger and rim board shall be a maximum of ½" thick and fastened per code.
7. See p. 160 for ledger-to-rim attachment with ½" gap.
8. Visit **strongtie.com/drawings** and search for SD1-L for additional ledger fastening detail sheets and load tables in DWG, PDF or DXF format.

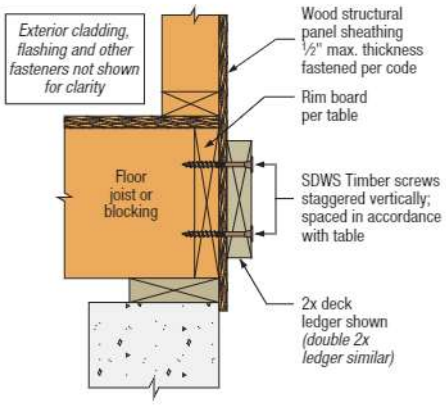

Ledger-to-Rim Board Assembly
(wood-framed lower floor acceptable,concrete wall shown for illustration purposes; other fasteners not shown for clarity)

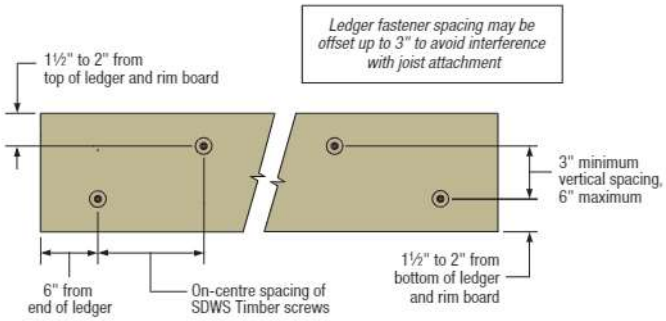

SDWS Timber Screw Spacing Detail for Ledgers

C-F-2023TECHSUP © 2023 Simpson Strong-Tie Company Inc.

Strong-Drive®
SDWS TIMBER SS Screw

Structural Wood and Engineered Wood Connections including Docks, Piers, Boardwalks and Ledgers

Deisgned to provide an easy-to-install, low-torque driving, high-strength, severe-corrosion resistant alternative to through-bolting, traditional lags and spikes. The Strong-Drive SDWS Timber SS screw is a premium solution for heavy-duty structural applications. Type 316 stainless steel provides severe-corrosion resistance, making SDWS TIMBER SS screws suitable for exterior and preservative-treated wood applications. For installation geometries, please refer to the previous page.

For more information, see p. 60, C-F-2023 *Fastening Systems* catalog

SDWS TIMBER SS Screw — 2021 and 2018 IRC Compliant Spacing for a Sawn Lumber Deck Ledger-to-Rim Board

Loading Condition	Nominal Ledger Size	Length (in.)	Model No.	Band Joist Material and Size	Maximum Deck Joist Span						
					Up to 6 ft.	Up to 8 ft.	Up to 10 ft.	Up to 12 ft.	Up to 14 ft.	Up to 16 ft.	Up to 18 ft.
					Maximum On-Center Spacing of Fasteners (in.)						
40 psf Live 10 psf Dead	2x	4	SDWS27400SS	1" OSB	13	10	8	6	6	5	4
				1" LVL							
				1⅛" OSB	18	14	11	9	8	7	6
				1 5/16" LVL							
				1¼" OSB							
				1½" LVL							
				1¼" LSL							
				1¾" LVL							
				2x SP, DFL, SPF, HF	18	14	11	9	8	7	6
60 psf Live 10 psf Dead	2x	4	SDWS27400SS	1" OSB	9	7	6	5	4	3	3
				1" LVL							
				1⅛" OSB	13	10	8	7	6	5	4
				1 5/16" LVL							
				1¼" OSB							
				1½" LVL							
				1¼" LSL							
				1¾" LVL							
				2x SP, DFL, SPF, HF	13	10	8	7	6	5	4
40 psf Live 10 psf Dead	(2) 2x	5	SDWS27500SS	1" OSB	15	12	9	8	7	6	5
				1" LVL							
				1⅛" OSB	15	12	9	8	7	6	5
				1 5/16" LVL							
				1¼" OSB							
				1½" LVL							
				1¼" LSL							
				1¾" LVL							
				2x SP, DFL, SPF, HF	15	12	9	8	7	6	5
60 psf Live 10 psf Dead	(2) 2x	5	SDWS27500SS	1" OSB	11	8	7	6	5	4	4
				1" LVL							
				1⅛" OSB	11	8	7	6	5	4	4
				1 5/16" LVL							
				1¼" OSB							
				1½" LVL							
				1¼" LSL							
				1¾" LVL							
				2x SP, DFL, SPF, HF	11	8	7	6	5	4	4

1. SDWS27SS screw spacing values are equivalent to 2021/2018 IRC Table R507.9.1.3(1) and 2015 IRC Table R507.2. The table also provides SDWS27SS screw spacing for a wider range of materials commonly used for rim board, and an alternate loading condition as required by some jurisdictions.
2. Solid-sawn rim board shall be spruce-pine-fir, hem-fir, Douglas fir–larch, or southern pine species. Ledger shall be hem-fir, Douglas fir–larch, or southern pine species.
3. Fastener spacings are based on the lesser of single fastener ICC-ES AC233 testing of the Strong-Drive SDWS27SS screw with a safety factor of 5.0 or ICC-ES AC13 assembly testing with a factor of safety of 5.0. Spacing includes NDS wet service factor adjustment.
4. Screws shall be placed 1.5" to 2" from the top and bottom of the ledger or rim board with 3" minimum and 6" maximum vertical distance between fasteners with horizontal on-center spacing per the table. End screws shall be located 6" from the end and at 1.5" to 2" from the bottom of the ledger. For screws located at least 2" but less than 6" from the end, use 50% of the load per screw and 50% of the table spacing between the end screw and the adjacent screw, and for screws located between 2" and 4" from the end, predrill using a 3/16" drill bit.
5. Structural sheathing between the ledger and rim board shall be a maximum of ½" thick and fastened per code.

C-F-2023TECHSUP © 2023 Simpson Strong-Tie Company Inc.

Strong-Drive®
SDWH TIMBER-HEX Screw

For more information, see p. 61, C-F-2023 *Fastening Systems* catalog

SDWH TIMBER-HEX Screw — 2021 and 2018 IRC Compliant Spacing for a Sawn Lumber Deck Ledger-to-Rim Board

Loading Condition	Nominal Ledger Size	Length (in.)	Model No.	Rim Board Material and Minimum Size	Maximum Deck Joist Span						
					Up to 6 ft.	Up to 8 ft.	Up to 10 ft.	Up to 12 ft.	Up to 14 ft.	Up to 16 ft.	Up to 18 ft.
					Maximum On-Center Spacing of Fasteners (in.)						
40 psf Live 10 psf Dead	2x	4	SDWH19400DB	1" OSB	13	9	8	6	5	5	4
				1" LVL							
				1⅛" OSB	18	13	11	9	8	7	6
				1 5/16" LVL							
				1¼" LSL							
				2x SP, DFL — 2x SPF, HF	15	12	9	8	7	6	5
60 psf Live 10 psf Dead	2x	4	SDWH19400DB	1" OSB	9	7	5	5	4	—	—
				1" LVL							
				1⅛" OSB	13	10	8	6	5	5	4
				1 5/16" LVL							
				1¼" LSL							
				2x SP, DFL — 2x SPF, HF	11	8	7	6	5	4	4

1. SDWH screw spacing values are equivalent to 2021/2018 IRC Table R507.9.1.3(1) and 2015 IRC table R507.2. The table also provides SDWH screw spacing for a wider range of materials commonly used for rim board, and an alternate loading condition as required by some jurisdictions.
2. Solid sawn rim board shall be spruce-pine-fir, hem-fir, Douglas fir–larch, or southern pine species. Ledger shall be hem-fir, Douglas fir–larch, or southern pine species.
3. Fastener spacings are based on the lesser of single fastener ICC-ES AC233 testing of the Strong-Drive SDWH screw with a safety factor of 5.0 or ICC-ES AC13 assembly testing with a factor of safety of 5.0. Spacing includes NDS wet service factor adjustment.
4. Screws shall be placed 1.5" to 2" from the top and bottom of the ledger or rim board with 3" minimum and 6" maximum vertical distance between fasteners with horizontal on-center spacing per the table. End screws shall be located 6" from the end and at 1.5" to 2" from the bottom of the ledger. For screws located at least 2" but less than 6" from the end, use 50% of the load per screw and 50% of the table spacing between the end screw and the adjacent screw, and for screws located between 2" and 4" from the end, predrill using a ⅛" drill bit.
5. Structural sheathing between the ledger and rim board shall be a maximum of ½" thick and fastened per code.
6. Visit **strongtie.com/drawings** and search for SD1-L for additional ledger fastening detail sheets and load tables in DWG, PDF or DXF format.

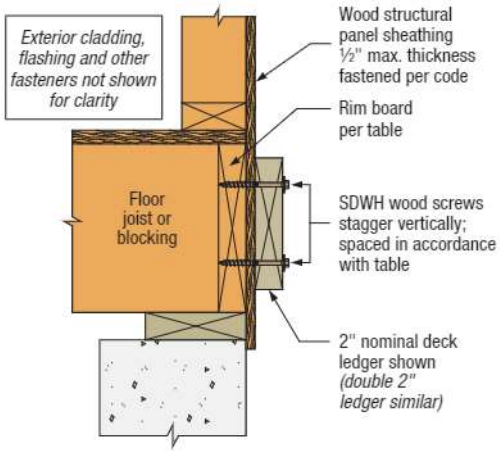

Ledger-to-Rim Board Assembly
(wood-framed lower floor acceptable, concrete wall shown for illustration purposes; other fasteners not shown for clarity)

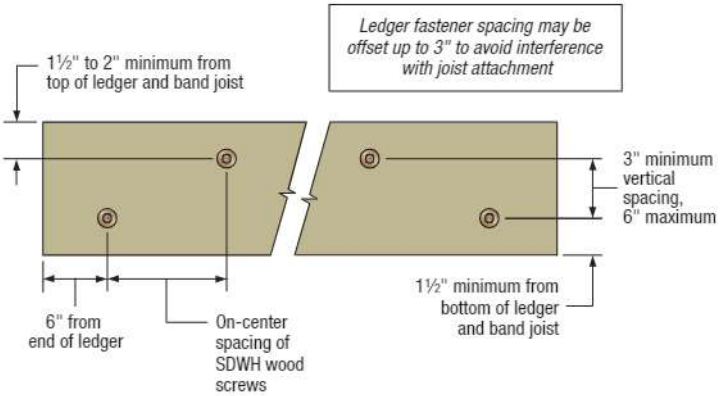

SDWH Timber-Hex Screw Spacing Detail

C-F-2023TECHSUP © 2023 Simpson Strong-Tie Company Inc.

Strong-Drive®
SDWH TIMBER-HEX and SDWS TIMBER Screw (Exterior Grade)

2021 and 2018 IRC Compliant Spacing and Allowable Shear Loads for Fastening a Sawn Lumber Deck Ledger-to-Rim Board with ½" Gap

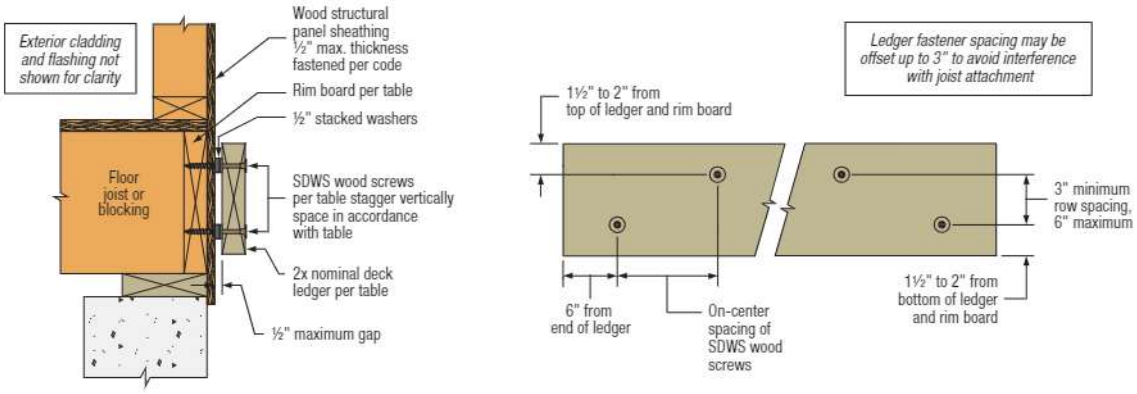

Table below lists the allowable shear loads for SDWS Timber screws and SDWH Timber-Hex screws when attaching a 2x ledger with up to ½" thickness of stacked washers to the listed rim board.

Single-Fastener Allowable Shear Loads for Fastening a Sawn Lumber Deck Ledger-to-Rim Board with ½" Gap

Nominal Ledger Size (in.)	Rim Board	Length (in.)	Model No.	Reference Allowable Loads (lb.)
2x	2x SPF, DFL, SP #2	4	SDWS22400DB	270
		4	SDWH19400DB	260
	1⅛" LSL	4	SDWS22400DB	255
		4	SDWH19400DB	245
	1¾" LVL	4	SDWS22400DB	290
		4	SDWH19400DB	255

1. Sawn lumber 2x ledger shall have a minimum specific gravity of 0.42 (HF or SPF) and be grade No. 2 or better.
2. Rim board is to be dry lumber (specific gravity at least 0.42) or EWP rim board product (equivalent specific gravity of at least 0.42 for nails and screws installed in the face orientation).
3. Screws shall be placed 1.5" to 2" from the top and bottom of the ledger or rim board with 3" minimum and 6" maximum vertical distance between fasteners with horizontal on-center spacing per the table. End screws shall be located 6" from the end and at 1.5" to 2" from the bottom of the ledger. For screws located at least 2" but less than 6" from the end, use 50% of the load per screw and 50% of the table spacing between the end screw and the adjacent screw, and for screws located between 2" and 4" from the end.
4. Wood structural panel sheathing between the ledger and rim board shall be a maximum of ½" thick and fastened per code.
5. Screws shall be tightened such that the washer stack is tightly compressed between the ledger and the rim board.
6. Maximum ½" gap created by stacked hot-dip galvanized or stainless-steel 5/16" Type A plain washers (N-narrow) with an outside diameter equal to 0.688" and inside diameter equal to 0.344".
7. Allowable loads are shown at the wood load duration factor of C_D = 1.0. Loads may be increased for load duration per the building code up to a C_D = 1.6. Tabulated values must be multiplied by all applicable adjustment factors per the NDS, including wet service factor.

C-F-2023TECHSUP © 2023 Simpson Strong-Tie Company Inc.

Strong-Drive® SDWH TIMBER-HEX and SDWS TIMBER Screw (Exterior Grade) (cont.)

2021 and 2018 IRC Compliant Spacing and Allowable Shear Loads for Fastening a Sawn Lumber Deck Ledger-to-Rim Board with ½" Gap

Strong-Drive SDWS Timber screws and SDWH Timber-Hex screws are suitable for installing ledgers with up to ½" drainage gap between the ledger and the rim board. These fasteners do not require predrilling and have a double-barrier coating providing corrosion resistance equivalent to hot-dip galvanization. The gap is formed by stacking hot-dip galvanized or stainless-steel 5⁄16" Type A plain washers (0.688" outside diameter, 0.344" inside diameter) on the shank of the screws between the ledger and the rim board. Weather proofing shall be the responsibility of the installer. The table below lists the maximum on-center spacing of SDWS Timber screws and SDWH Timber-Hex screws when attaching a 2x ledger to the listed rim board of various widths with a maximum ½" gap between them.

Loading Condition: 40 PSF Live Load and 10 PSF Dead Load

Ledger Nominal Size (in.)	Rim Board Material (in.)	Length (in.)	Model No.	Maximum Deck Joist Span						
				Up to 6 ft.	Up to 8 ft.	Up to 10 ft.	Up to 12 ft.	Up to 14 ft.	Up to 16 ft.	Up to 18 ft.
				Maximum On-Center Spacing of Fasteners (in.)						
2x	2x DFL, SP, SPF #2	4	SDWS22400DB	15	11	9	7	6	5	5
		4	SDWH19400DB	14	11	8	7	6	5	4
	1.125" LSL	4	SDWS22400DB	14	10	8	7	6	5	4
		4	SDWH19400DB	13	10	8	6	5	5	4
	1.75" LVL	4	SDWS22400DB	16	12	9	8	7	6	5
		4	SDWH19400DB	14	10	8	7	6	5	4

1. Sawn lumber ledger shall have minimum specific gravity of 0.42 (HF or SPF) and shall be grade No. 2 or better. Rim board is to be dry lumber (specific gravity at least 0.42) or EWP rim board product (equivalent specific gravity of at least 0.42 for nails and screws installed in the face orientation).
2. Fastener spacings are based on the lesser of single fastener testing following ICC-ES AC233 or ledger assembly testing following ICC-ES AC13 using a safety factor of 5.0. Spacing includes NDS wet service factor adjustment.
3. Screws shall be placed 1½" to 2" from the top and bottom of the ledger board or rim board, 6" from the end of the ledger with 3" minimum and 6" maximum between rows. End screws shall be located near the bottom of the ledger. See figure on the previous page.
4. Wood structural panel sheathing between the ledger and rim board shall be a maximum of ½" thick and fastened per code.
5. Screws shall be tightened such that the washer stacks are tightly compressed between the ledger and the rim board.
6. Maximum ½" gap formed by stacked hot-dip galvanized or stainless-steel 5⁄16" Type A plain washers (N–narrow) with a nominal outside diameter of 0.688" and inside diameter of 0.344".
7. The fastener specifications in this table meet the prescriptive deck ledger attachment solutions and loading requirements per 2021/2018 IRC Table R507.9.1.3(1) and 2015/2012 IRC Table R507.2.

C-F-2023TECHSUP © 2023 Simpson Strong-Tie Company Inc.

SIMPSON Strong-Tie

Strong-Drive® SDWH TIMBER-HEX HDG Screw

Deck Ledger-to-Rim Board Applications

For more information, see p. 63, C-F-2023 *Fastening Systems* catalog

SDWH Timber-Hex HDG Screw — 2021 and 2018 IRC Compliant Spacing for a Sawn Lumber Deck Ledger-to-Rim Board

Loading Condition	Nominal Ledger Size (in.)	Length (in.)	Model No.	Rim Board Material and Minimum Size	Maximum Deck Joist Span						
					Up to 6 ft.	Up to 8 ft.	Up to 10 ft.	Up to 12 ft.	Up to 14 ft.	Up to 16 ft.	Up to 18 ft.
					Maximum On-Center Spacing of Fasteners (in.)						
40 psf Live 10 psf Dead	2x	4	SDWH27400G	1" OSB 1" LVL 1⅛" OSB 1 5/16" LVL 1¼" LSL 2x SP, DFL – 2x SPF, HF	22	17	13	11	10	8	7
60 psf Live 10 psf Dead	2x	4	SDWH27400G	1" OSB 1" LVL 1⅛" OSB 1 5/16" LVL 1¼" LSL 2x SP, DFL – 2x SPF, HF	16	12	10	8	7	6	5
40 psf Live 10 psf Dead	(2) 2x	6	SDWH27600G	1" OSB 1" LVL 1⅛" OSB 1 5/16" LVL 1¼" LSL 2x SP, DFL – 2x SPF, HF	25	19	15	13	11	9	8
60 psf Live 10 psf Dead	(2) 2x	6	SDWH27600G	1" OSB 1" LVL 1⅛" OSB 1 5/16" LVL 1¼" LSL 2x SP, DFL – 2x SPF, HF	18	14	11	9	8	7	6

1. SDWH27G screw spacing values are equivalent to 2021/2018 IRC Table R507.9.1.3(1) and 2015 IRC Table R507.2. The table also provides SDWH27G screw spacing for a wide range of materials commonly used for rim board, and an alternate loading condition as required by some jurisdictions.
2. Sawn lumber rim board shall be spruce-pine-fir, hem-fir, Douglas fir–larch, or southern pine species. Ledger shall be hem-fir, Douglas fir–larch, or southern pine species.
3. Fastener spacings are based on the lesser of single fastener ICC-ES AC233 testing of the Strong-Drive SDWH27G screw with a safety factor of 5.0 or ICC-ES AC13 assembly testing with a factor of safety of 5.0. Spacing includes NDS wet service factor adjustment.
4. Multiple ledger plies shall be fastened together per code independent of the SDWH27G screws.
5. Screws shall be placed 1.5" to 2" from the top and bottom of the ledger or rim board with 3" minimum and 6" maximum vertical distance between fasteners with horizontal on-center spacing per the table. End screws shall be located 6" from the end and at 1.5" to 2" from the bottom of the ledger. For screws located at least 2" but less than 6" from the end, use 50% of the load per screw and 50% of the table spacing between the end screw and the adjacent screw, and for screws located between 2" and 4" from the end, predrill using a 3/16" drill bit.
6. Structural sheathing between the ledger and rim board shall be a maximum of ½" thick and fastened per code.
7. Visit **strongtie.com/drawings** and search for SD1-L for additional ledger fastening detail sheets and load tables in DWG, PDF or DXF format.

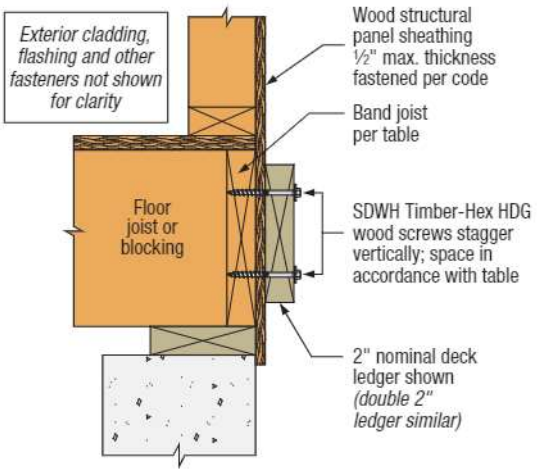

Ledger-to-Rim Board Assembly

(wood-framed lower floor acceptable, concrete wall shown for illustration purposes; other fasteners not shown for clarity.)

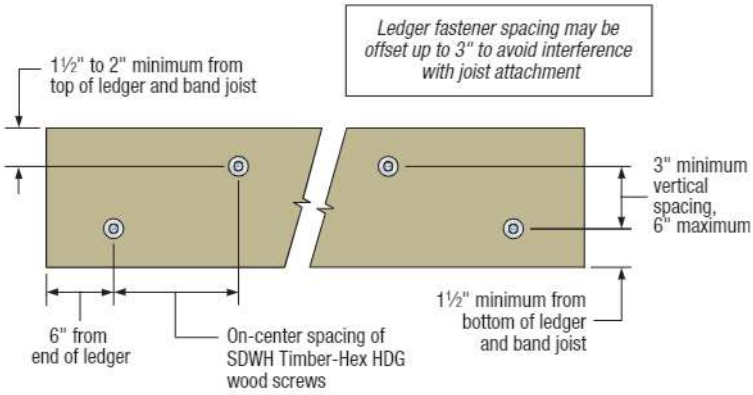

SDWH Timber-Hex HDG Screw Spacing Detail for Ledgers

C-F-2023TECHSUP © 2023 Simpson Strong-Tie Company Inc.

Strong-Drive® SDWH TIMBER-HEX HDG Screw

Deck Ledger-to-Rim Board Applications, Installed through 1" Thick Rigid Foam Board

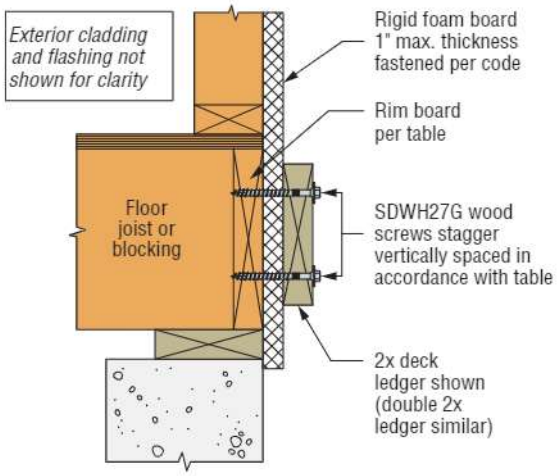

Ledger-to-Rim Board Assembly
(Wood-framed lower floor acceptable, concrete wall shown for illustration purposes.)

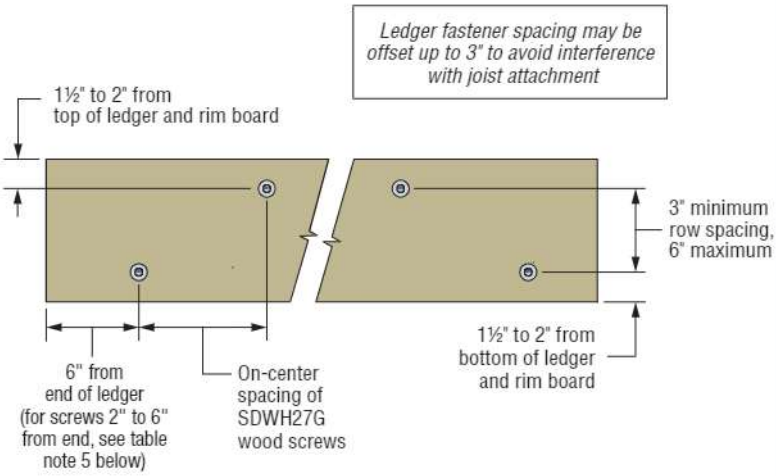

SDWH Timber-Hex HDG Screw Spacing Detail for Ledgers

SDWH TIMBER-HEX HDG — On-Center Spacing for Sawn Lumber Deck Ledger-to-Rim Board Installed Through 1" Thick Rigid Foam Board

Loading Condition	Nominal Ledger Size (in.)	Length (in.)	Model No.	Rim Board Material and Minimum Size	Maximum Deck Joist Span						
					Up to 6 ft.	Up to 8 ft.	Up to 10 ft.	Up to 12 ft.	Up to 14 ft.	Up to 16 ft.	Up to 18 ft.
					Maximum On-Center Spacing of Fasteners (in.)						
40 psf Live 10 psf Dead	2x	4	SDWH27400G	1" OSB	12	9	7	6	5	4	4
				1" LVL							
				1⅛" OSB	12	9	7	6	5	5	4
				1 5/16" LVL							
				1¼" LSL							
				2x SP, DFL — 2x SPF, HF	10	7	6	5	4	4	—
60 psf Live 10 psf Dead	2x	4	SDWH27400G	1" OSB	8	6	5	4	4	—	—
				1" LVL							
				1⅛" OSB	9	7	5	4	4	—	—
				1 5/16" LVL							
				1¼" LSL							
				2x SP, DFL — 2x SPF, HF	7	5	4	4	—	—	—
40 psf Live 10 psf Dead	(2) 2x	6	SDWH27600G	1" OSB	13	10	8	6	6	5	4
				1" LVL							
				1⅛" OSB	15	11	9	7	6	6	5
				1 5/16" LVL							
				1¼" LSL							
				2x SP, DFL — 2x SPF, HF	16	12	10	8	7	6	5
60 psf Live 10 psf Dead	(2) 2x	6	SDWH27600G	1" OSB	9	7	6	5	4	—	—
				1" LVL							
				1⅛" OSB	11	8	6	5	5	4	4
				1 5/16" LVL							
				1¼" LSL							
				2x SP, DFL — 2x SPF, HF	12	9	7	6	5	4	4

1. SDWH27G screw spacing values are equivalent to 2021/2018 IRC Table R507.9.1.3(1) and 2015 IRC Table R507.2. The table also provides SDWH27G screw spacing for a wide range of materials commonly used for rim board, and an alternate loading condition as required by some jurisdictions.
2. Sawn lumber rim board shall be spruce-pine-fir, hem-fir, Douglas fir–larch, or southern pine species. Ledger shall be hem-fir, Douglas fir–larch, or southern pine species.
3. Fastener spacings are based on the lesser of single fastener ICC-ES AC233 testing of the Strong-Drive SDWH27G screw with a safety factor of 5.0 or ICC-ES AC13 assembly testing with a factor of safety of 5.0. Spacing includes NDS wet service factor adjustment.
4. Multiple ledger plies shall be fastened together per code independent of the SDWH27G screws.
5. Rows of screws shall be vertically offset and evenly staggered. Screws shall be placed 1½" to 2" from the top and bottom of the ledger or rim board with 3" minimum and 6" maximum between rows and spaced per the table. End screws shall be located 6" from the end and at 1½" to 2" from the bottom of the ledger. For screws located at least 2" but less than 6" from the end, use 50% of the table spacing between the end screw and the adjacent screw, and for screws located between 2" and 4" from the end, predrill using a 3/16" drill bit.
6. Rigid foam board shall have a minimum compressive strength of 13 psi in accordance with ASTM C578, ASTM C1289, or ASTM D1621, and be fastened to framing per code.
7. Visit **strongtie.com/drawings** and search for SD1-L for additional ledger fastening detail sheets and load tables in DWG, PDF or DXF format.

C-F-2023TECHSUP © 2023 Simpson Strong-Tie Company Inc.

Strong-Drive®
SDWH TIMBER-HEX SS Screw

For more information, see p. 62, C-F-2023 *Fastening Systems* catalog

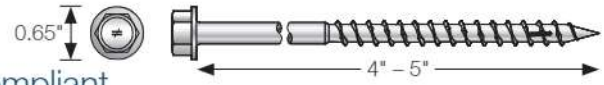

SDWH TIMBER-HEX SS — 2021 and 2018 IRC Compliant Spacing for a Sawn Lumber Deck Ledger-to-Rim Board

Loading Condition	Nominal Ledger Thickness (in.)	Length (in.)	Model No.	Rim Board Material and Size	Maximum Deck Joist Span						
					Up to 6 ft.	Up to 8 ft.	Up to 10 ft.	Up to 12 ft.	Up to 14 ft.	Up to 16 ft.	Up to 18 ft.
					Maximum On-Center Spacing of Fasteners (in.)						
40 psf Live 10 psf Dead	2x	4	SDWH27400SS	1" OSB	19	14	11	9	8	7	6
				1" LVL							
				1⅛" OSB	19	14	11	9	8	7	6
				1 5/16" LVL							
				1¼" OSB							
				1½" LVL							
				1¼" LSL							
				1¾" LVL							
				2x SP, DFL, SPF, HF	19	14	11	9	8	7	6
60 psf Live 10 psf Dead	2x	4	SDWH27400SS	1" OSB	13	10	8	7	6	5	4
				1" LVL							
				1⅛" OSB	13	10	8	7	6	5	4
				1 5/16" LVL							
				1¼" OSB							
				1½" LVL							
				1¼" LSL							
				1¾" LVL							
				2x SP, DFL, SPF, HF	13	10	8	7	6	5	4
40 psf Live 10 psf Dead	(2) 2x	5	SDWH27500SS	1" OSB	19	14	11	9	8	7	6
				1" LVL							
				1⅛" OSB	19	14	11	9	8	7	6
				1 5/16" LVL							
				1¼" OSB							
				1½" LVL							
				1¼" LSL							
				1¾" LVL							
				2x SP, DFL, SPF, HF	19	14	11	9	8	7	6
60 psf Live 10 psf Dead	(2) 2x	5	SDWH27500SS	1" OSB	13	10	8	7	6	5	4
				1" LVL							
				1⅛" OSB	13	10	8	7	6	5	4
				1 5/16" LVL							
				1¼" OSB							
				1½" LVL							
				1¼" LSL							
				1¾" LVL							
				2x SP, DFL, SPF, HF	13	10	8	7	6	5	4

See footnotes on next page.

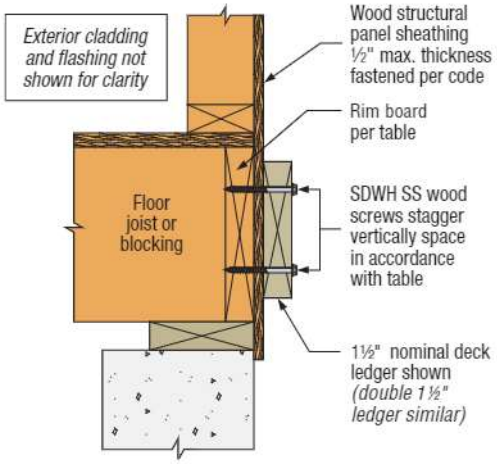

Ledger-to-Rim Board Assembly
(wood-framed lower floor acceptable; concrete wall shown for illustration purposes)

C-F-2023TECHSUP © 2023 Simpson Strong-Tie Company Inc.

Strong-Drive®
SDWH TIMBER-HEX SS Screw (cont.)

SDWH TIMBER-HEX SS — 2021 and 2018 IRC Compliant Spacing for a Sawn Lumber Deck Ledger-to-Rim Board

Loading Condition	Nominal Ledger Thickness (in.)	Length (in.)	Model No.	Rim Board Material and Size	Maximum Deck Joist Span						
					Up to 6 ft.	Up to 8 ft.	Up to 10 ft.	Up to 12 ft.	Up to 14 ft.	Up to 16 ft.	Up to 18 ft.
					Maximum On-Center Spacing of Fasteners (in.)						
40 psf Live 10 psf Dead	2x	4	SDWH19400SS	1" OSB	14	11	8	7	6	5	5
				1" LVL							
				1⅛" OSB	14	11	8	7	6	5	5
				1 5/16" LVL							
				1¼" OSB							
				1½" LVL							
				1¼" LSL							
				1¾" LVL							
				2x SP, DFL, SPF, HF	14	11	8	7	6	5	5
60 psf Live 10 psf Dead	2x	4	SDWH19400SS	1" OSB	10	8	6	5	4	4	3
				1" LVL							
				1⅛" OSB	10	8	6	5	4	4	3
				1 5/16" LVL							
				1¼" OSB							
				1½" LVL							
				1¼" LSL							
				1¾" LVL							
				2x SP, DFL, SPF, HF	10	8	6	5	4	4	3
40 psf Live 10 psf Dead	(2) 2x	5	SDWH19500SS	1" OSB	14	11	8	7	5	5	5
				1" LVL							
				1⅛" OSB	14	11	8	7	5	5	5
				1 5/16" LVL							
				1¼" OSB							
				1½" LVL							
				1¼" LSL							
				1¾" LVL							
				2x SP, DFL, SPF, HF	14	11	8	7	5	5	5
60 psf Live 10 psf Dead	(2) 2x	5	SDWH19500SS	1" OSB	10	8	6	5	4	4	3
				1" LVL							
				1⅛" OSB	10	8	6	5	4	4	3
				1 5/16" LVL							
				1¼" OSB							
				1½" LVL							
				1¼" LSL							
				1¾" LVL							
				2x SP, DFL, SPF, HF	10	8	6	5	4	4	3

1. Screw spacing values are equivalent to 2021/2018 IRC Table R507.9.1.3(1) and 2015 IRC Table R507.2. The table above also provides screw spacing for a wider range of materials commonly used for band joists, and an alternate loading condition as required by some jurisdictions.
2. Sawn rim board shall be spruce-pine-fir, hem-fir, Douglas fir–larch, or southern pine species. Ledger shall be hem-fir, Douglas fir–larch, or southern pine species.
3. Fastener spacings are based on the lesser of single fastener ICC-ES AC233 testing with a safety factor of 5.0 or ledger assembly testing with a factor of safety of 5.0. Spacing includes NDS wet service factor adjustment.
4. Multiple ledger plies shall be fastened together per code independent of the screws.
5. Screws shall be placed 1.5" to 2" from the top and bottom of the ledger or rim board with 3" minimum and 6" maximum vertical distance between fasteners with horizontal on-center spacing per the table. End screws shall be located 6" from the end and at 1.5" to 2" from the bottom of the ledger. For screws located at least 2" but less than 6" from the end, use 50% of the load per screw and 50% of the table spacing between the end screw and the adjacent screw, and for screws located between 2" and 4" from the end, predrill using a 5/32" drill bit for SDWH19SS and 7/32" drill bit for SDWH27SS.
6. Structural sheathing between the ledger and band shall be a maximum of ½" thick and fastened per code.
7. See figure on previous page.
8. Visit **strongtie.com/drawings** and search for SD1-L for additional ledger fastening detail sheets and load tables in DWG, PDF or DXF format.

C-F-2023TECHSUP © 2023 Simpson Strong-Tie Company Inc.

Deck Construction — Ledgers

Strong-Drive®
SDS HEAVY-DUTY CONNECTOR Screw

For more information, see p. 68, C-F-2023 *Fastening Systems* catalog

SDS — 2021 and 2018 IRC Compliant Spacing for a Sawn Lumber Deck Ledger-to-Rim Board

Loading Condition	Ledger Nominal Size (in.)	SDS Screw Length (in.)	Rim Board Material and Size	Maximum Deck Joist Span						
				Up to 6 ft.	Up to 8 ft.	Up to 10 ft.	Up to 12 ft.	Up to 14 ft.	Up to 16 ft.	Up to 18 ft.
				Maximum On-Center Spacing of Fasteners (in.)						
40 psf Live 10 psf Dead	2x	3½	2" nominal sawn lumber	13	10	8	6	5	5	4
	(2) 2x[3]	5								
	2x	3½	1" min. oriented strand board (OSB) rim board	12	9	7	6	5	4	4
	2x	3½	1⅛" min. oriented strand board (OSB) rim board or 1¼" min. structural composite lumber	15	11	9	7	6	5	5
60 psf Live 10 psf Dead	2x	3½	2" nominal sawn lumber	9	7	5	4	4	3	3
	(2) 2x[3]	5								
	2x	3½	1" min. oriented strand board (OSB) rim board	8	6	5	4	3	3	2
	2x	3½	1⅛" min. oriented strand board (OSB) rim board or 1¼" min. structural composite lumber	10	8	6	5	4	4	3

1. Solid-sawn rim board shall be spruce-pine-fir, hem-fir, Douglas fir–larch, or southern pine species. Ledger shall be hem-fir, Douglas fir–larch, or southern pine species.
2. Fastener spacings are based on single fastener testing of the Strong-Drive SDS screw with a safety factor of 5.0 and include NDS wet service adjustment factor.
3. Multiple ledger plies shall be fastened together per code independent of the SDS screws.
4. SDS screw spacing values (above) are equivalent to 2021/2018 IRC Table R507.9.1.3(1) and 2015 IRC Table R507.2, based on testing of the Strong-Drive SDS screw with a factor of safety of 5.0. The table above also provides SDS screw spacing for a wider range of materials commonly used for rim board, and an alternate loading condition as required by some jurisdictions.
5. Screw models SDS25312, SDS25312SS and SDS25500.
6. Visit **strongtie.com/drawings** and search for SD1-L for additional ledger fastening detail sheets and load tables in DWG, PDF or DXF format.
7. Fastener loads are based on the lesser of single fastener ICC-ES AC233 testing with a safety factor of 5.0 or ICC-ES AC13 assembly testing with a factor of safety of 5.0.

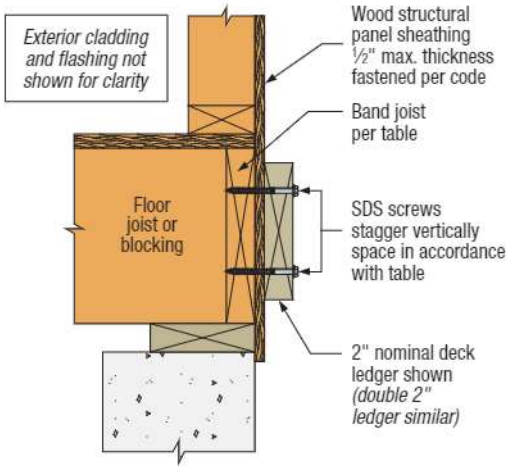

Ledger-to-Rim Board Assembly
(wood-framed lower floor acceptable, concrete wall shown for illustration purposes; other fasteners not shown for clarity.)

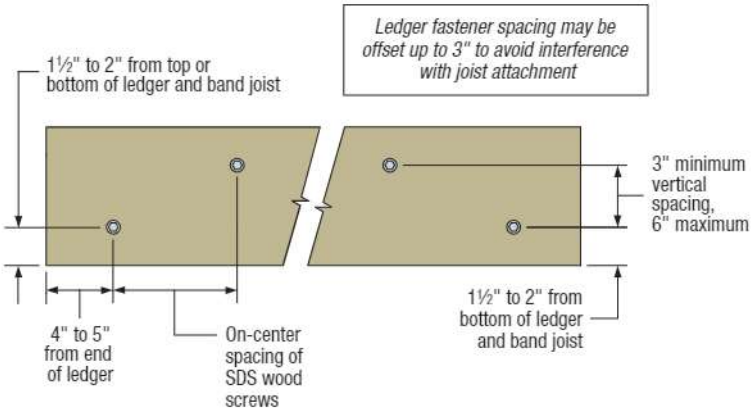

SDS Screw Spacing Detail for Ledgers

C-F-2023TECHSUP © 2023 Simpson Strong-Tie Company Inc.

Strong-Drive®

SDS, SDWS and SDWH Sawn Lumber Deck Ledger to Band Joist Applications

Simpson Strong-Tie Company manufactures six fastener types that are suitable for installing ledgers to band joist floor framing. The fasteners do not require predrilling and can be made of stainless steel or carbon steel that has a double barrier coating or is hot-dip galvanized. The design table is based on the lesser of single-fastener connection testing in compliance with ICC-ES AC233 or ledger assembly testing following ICC-ES AC13 with an applied factor of safety of 5.0. Loads include NDS wet service factor adjustment.

Allowable Shear Loads for Attachment of Lumber Deck Ledger to Band Joist

Fastener	Nominal Ledger Size	Screw Length (in.)	Model No.	Band Joist Material and Minimum Size	Allowable Shear Load (lb.)
Strong Drive SDWS **TIMBER** Screw	2x	4	SDWS22400DB	1" OSB OR 1" LVL	170
	2x			1⅛" OSB	205
	2x			1 5/16" LVL OR 1¼" LSL	265
	2x			2x Nominal Sawn Lumber	270
	2-2x	5	SDWS22500DB	1" OSB OR 1" LVL	190
	2-2x			1⅛" OSB	200
	2-2x			1 5/16" LVL OR 1¼" LSL	200
	2-2x			2x Nominal Sawn Lumber	200
Strong Drive SDWH **TIMBER-HEX** Screw	2x	4	SDWH19400DB	1" OSB OR 1" LVL	155
	2x			1⅛" OSB	220
	2x			1 5/16" LVL OR 1¼" LSL	225
	2x			2x Nominal Sawn Lumber	190
Strong Drive SDWH **TIMBER-HEX SS** Screw	2x	4	SDWH27400SS	1" OSB OR 1" LVL	235
	2x			1⅛" OSB	235
	2x			1 5/16" LVL OR 1¼" LSL	235
	2x			2x Nominal Sawn Lumber	235
	2-2x	5	SDWH27500SS	1" OSB OR 1" LVL	235
	2-2x			1⅛" OSB	235
	2-2x			1 5/16" LVL OR 1¼" LSL	235
	2-2x			2x Nominal Sawn Lumber	235
	2x	4	SDWH19400SS	1" OSB OR 1" LVL	177
	2x			1⅛" OSB	177
	2x			1 5/16" LVL OR 1¼" LSL	177
	2x			2x Nominal Sawn Lumber	177
	2-2x	5	SDWH19500SS	1" OSB OR 1" LVL	177
	2-2x			1⅛" OSB	177
	2-2x			1 5/16" LVL OR 1¼" LSL	177
	2-2x			2x Nominal Sawn Lumber	177
Strong Drive SDS **HEAVY-DUTY CONNECTOR** Screw	2x	3½	SDS25312	1" OSB OR 1" LVL	155
	2x			1⅛" OSB	185
	2x			1 5/16" LVL OR 1¼" LSL	190
	2x			2x Nominal Sawn Lumber	165
	2-2x	5	SDS25500	2x Nominal Sawn Lumber	165

Footnotes on next page.

C-F-2023TECHSUP © 2023 Simpson Strong-Tie Company Inc.

SIMPSON Strong-Tie

Strong-Drive®

SDS, SDWS and SDWH HDG Sawn Lumber Deck Ledger to Band Joist Applications (cont.)

Allowable Shear Loads for Attachment of Lumber Deck Ledger to Band Joist (cont.)

Fastener	Nominal Ledger Size	Screw Length (in.)	Model No.	Band Joist Material and Minimum Size	Allowable Shear Load (lb.)
Strong Drive **TIMBER SS** Screw	2x	4	SDWS27400SS	1" OSB OR 1" LVL	160
				1⅛" OSB	225
				1 5/16" LVL OR 1¼" LSL	225
				2x Nominal Sawn Lumber	225
	2-2x	5	SDWS27500SS	1" OSB OR 1" LVL	190
				1⅛" OSB	190
				1 5/16" LVL OR 1¼" LSL	190
				2x Nominal Sawn Lumber	190
Strong Drive SDWH **TIMBER-HEX HDG** Screw	2x	4	SDWH27400G	1" OSB OR 1" LVL	280
				1⅛" OSB	280
				1 5/16" LVL OR 1¼" LSL	280
				2x Nominal Sawn Lumber	280
	2-2x	6	SDWH27600G	1" OSB OR 1" LVL	315
				1⅛" OSB	315
				1 5/16" LVL OR 1¼" LSL	315
				2x Nominal Sawn Lumber	315

1. Specific gravity of the solid sawn band joists and ledgers shall be typical of species combinations with $0.42 \leq SG \leq 0.55$.
2. Multiple ledger plies shall be fastened together per code independent of the SDS, SDWS or SDWH fasteners listed in the table.
3. Allowable loads are shown at the wood load duration factor of $C_D = 1.0$. Loads may be increased for load duration by the building code up to a $C_D = 1.6$.
4. Structural sheathing between the ledger and band joist shall be a maximum of ½" thick and fastened per code.
5. See Screw Spacing Detail on the following page for spacing requirements.
6. End screws shall be located near the bottom of the ledger. For end distances between 2" and 6", use 50% of the load and 50% of the standard spacing between the end screw and the adjacent screw. For end distances between 2" and 4", predrill using a 7/32" drill bit for SDWH27SS fasteners, a 3/16" drill bit for the SDWH27G and SDWS27SS fasteners, a 5/32" drill bit for SDS, SDWS22DB, and SDWH19SS fasteners, and a ⅛" drill bit for SDWH19DB.
7. Visit **strongtie.com/drawings** and search for SD1-L for additional ledger fastening detail sheets and load tables in DWG, PDF or DXF format.

C-F-2023TECHSUP © 2023 Simpson Strong-Tie Company Inc.

SIMPSON Strong-Tie

Strong-Drive®
SDS, SDWS and SDWH — Lumber
Deck Ledger-to-Band Joist Applications (cont.)

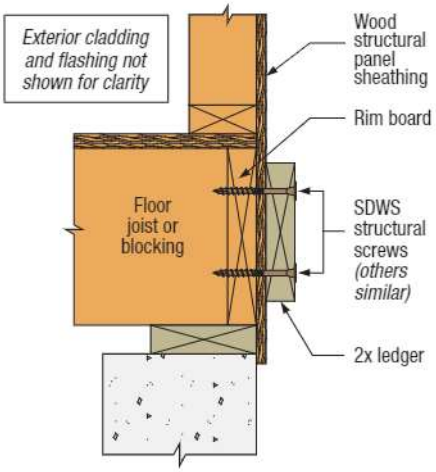

Ledger-to-Band Joist Assembly

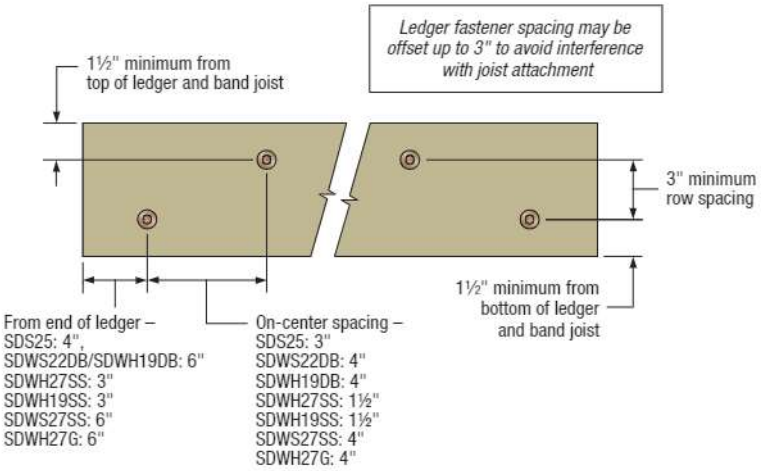

Screw Spacing Detail

C-F-2023TECHSUP © 2023 Simpson Strong-Tie Company Inc.

Strong-Drive®
SDWS **TIMBER** Screw (Exterior Grade) for Guard Post Installations

For more information, see p. 59, C-F-2023 *Fastening Systems* catalog

Framed guard post installations fastened with SDWS Timber screws (Exterior Grade), referred to as SDWS Timber Screws in this section, were tested in accordance with ICC-ES AC273 and met the 600 lb. concentrated ultimate load applied at the top of a single post in an outward direction and the post deflection limit at the 200 lb. design level. For a required uniform load of 150 plf in AC273 for guard and handrail systems, the screw was not tested as excepted for one- and two-family dwellings in IBC 2021 Section 1607.9.1. The following details were tested:

- Detail A: Interior Post on Rim Board
- Detail B: Interior Post at Corner
- Detail C: Interior Post on Rim Joist with Adjacent Joist
- Detail D: Interior Post on Rim Joist between Joists

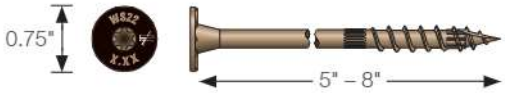

The SDWS Timber screws are the subject of IAPMO UES ER-192. The table on the next page lists the SDWS Timber screw information and total quantity of fasteners required for each guard post detail. The guard post details are shown on pp. 171–173.

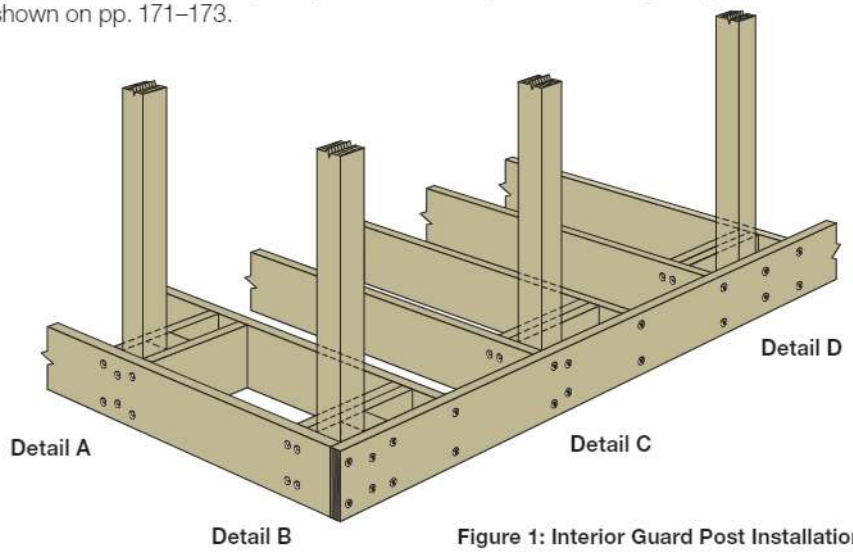

Figure 1: Interior Guard Post Installations Using Strong-Drive SDWS Timber Screws

Code-Compliant Guard Post Connection Details

Installation Scope:

For 36" Guard Post Height

(above deck surface, refer to T-F-GRDPSTRL)

- Use nominal 4" x 4" guard post
- Use nominal 2" x 8" rim board/rim joist, 2x blocking and 4x blocking
- Framing lumber should be HF, DFL or SP, pressure treated with chemical retention not greater than UC4A
- Full-depth blocking required
- Interior post installation (post positioned inside the rim board, rim joist)
- Fastener position tolerance: ± 1⁄16"

For 42" Guard Post Height

(above deck surface, refer to T-F-GRDPSTRL)

- Use nominal 4" x 4" guard post
- Use nominal 2" x 8" rim board/rim joist, 2x blocking and 4x blocking
- Framing lumber should be DFL (No. 2 grade, minimum) or SP (Construction grade, minimum), pressure treated with chemical retention not greater than UC4A
- Full-depth blocking required
- Interior post installation (post positioned inside the rim board, rim joist)
- Fastener position tolerance: ± 1⁄16"

C-F-2023TECHSUP © 2023 Simpson Strong-Tie Company Inc.

Strong-Drive®
SDWS **TIMBER** Screw (Exterior Grade) for Guard Post Installations (cont.)

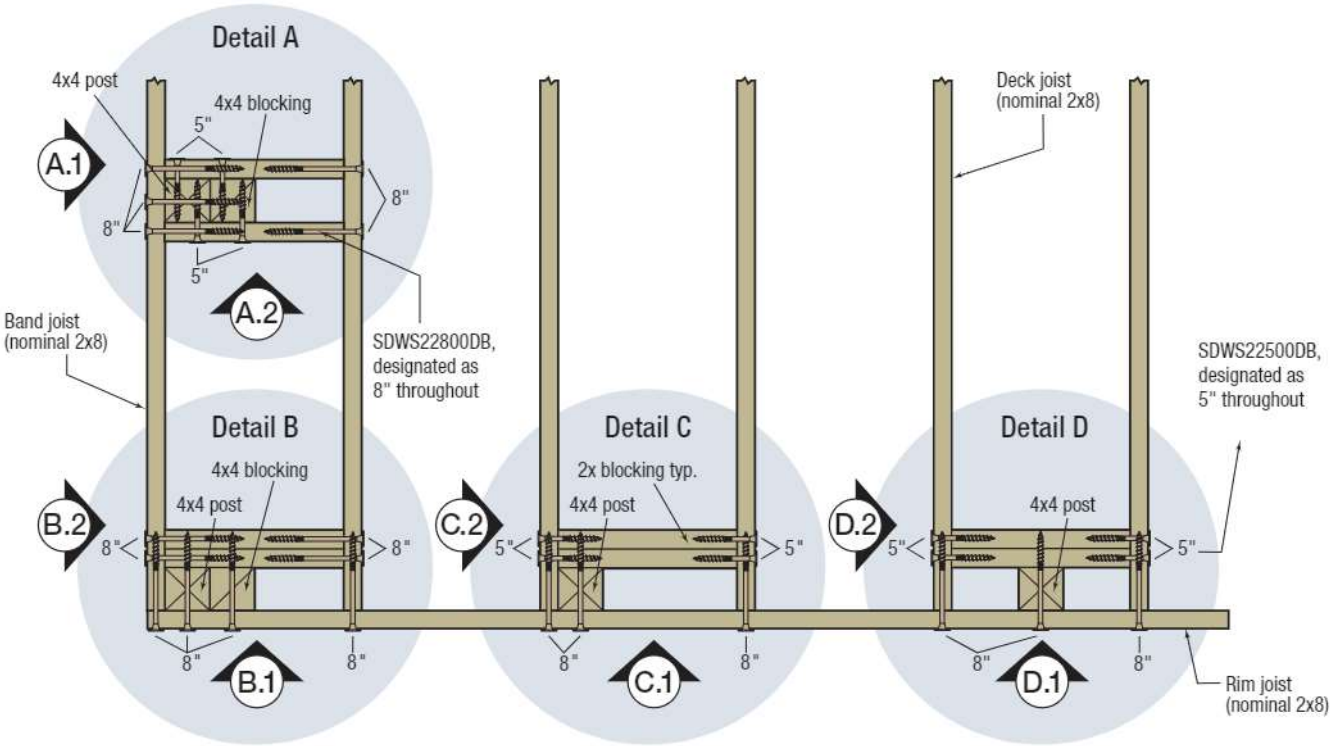

Plan View Showing Details of Four Guard Post Connections Using Strong-Drive SDWS Timber Screws

SDWS Timber Screw — Screw Information for Guard Post Details

Detail	Length (in.)	Model No.	Quantity Required
A	5	SDWS22500DB	4
	8	SDWS22800DB	10
B	8	SDWS22800DB	16
C	5	SDWS22500DB	8
	8	SDWS22800DB	6
D	5	SDWS22500DB	8
	8	SDWS22800DB	6

1. SDWS Timber screws install best with a low-speed ½" drill and a T40 6-lobe bit. The matched bit included with the screws is recommended for best results.
2. Predrilling is typically not required. Where predrilling is necessary, use a 5/32" drill bit for Strong-Drive SDWS Timber screws.
3. Screw heads that are countersunk flush to the wood surface are acceptable if the screw has not spun out.
4. Deck joists shall be fastened to rim joist and ledger as required by the code. See p. 172 for rim joist connection.

C-F-2023TECHSUP © 2023 Simpson Strong-Tie Company Inc.

Strong-Drive®
SDWS **TIMBER** Screw (Exterior Grade) for Guard Post Installations (cont.)

Detail A — Interior Post on Rim Board

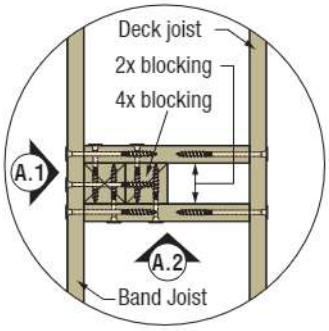

Detail A Plan View

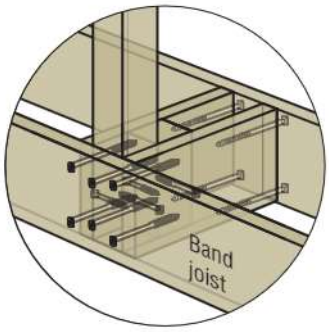

Detail A Isometric View

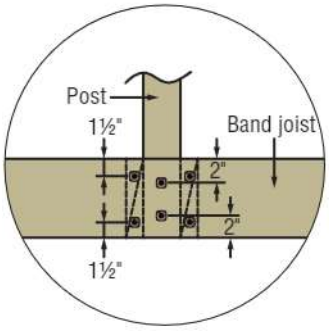

Detail A.1 Front Elevation

1. Rim board to 2x blocking 1½" from top and bottom edges using 8" SDWS22800DB.
2. Rim board to post and 4x blocking 2" from top and bottom edges using 8" SDWS22800DB.

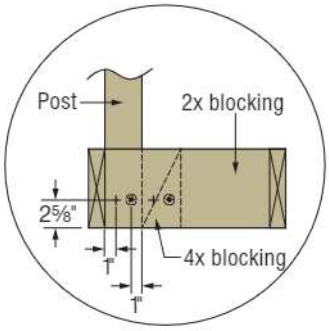

Detail A.2 Side Elevation

1. 2x blocking to post — opposing screws 1" from outer edges of post, 2⅝" from bottom edge of 2x blocking using 5" SDWS22500DB.
2. 2x blocking to 4x blocking — opposing screws 1" from outer edges of 4x blocking, 2⅝" from bottom edge of 2x blocking using 5" SDWS22500DB.

Detail B — Interior Post on Corner

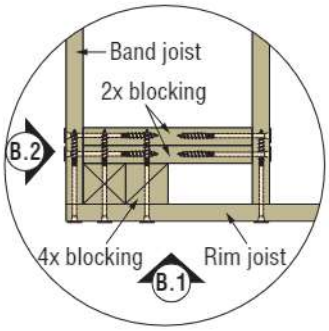

Detail B Plan View

Note: For fastening rim joist to rim board and deck joists, predrilling for the SDWS22800DB screws is recommended using a 5⁄32" drill bit.

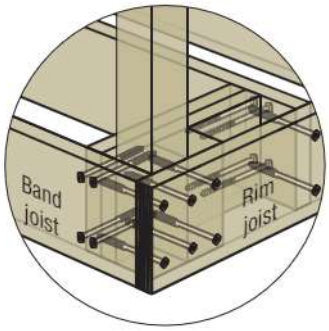

Detail B Isometric View

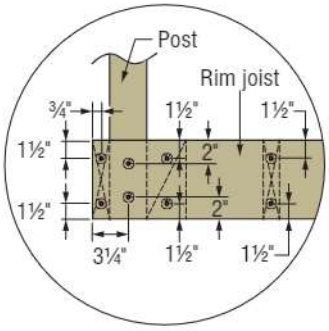

Detail B.1 Front Elevation

1. Rim joist to rim board or deck joists 1½" from top and bottom edges, ¾" from side edge using 8" SDWS22800DB.
2. Rim joist to post and 2x blocking 2" from top and bottom edges, centered on post using 8" SDWS22800DB.
3. Rim joist to 4x blocking and 2x blocking 1½" from top and bottom edges centered on 4x blocking using 8" SDWS22800DB.

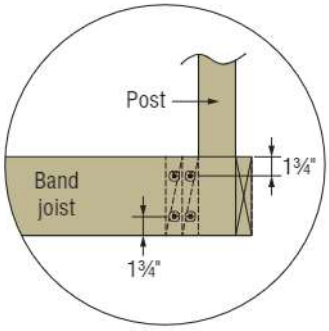

Detail B.2 Side Elevation

1. Rim board to 2x blocking 1¾" from top and bottom edges using 8" SDWS22800DB.

C-F-2023TECHSUP © 2023 Simpson Strong-Tie Company Inc.

Strong-Drive®
SDWS **TIMBER** Screw (Exterior Grade) for Guard Post Installations (cont.)

Detail C — Interior Post on Rim Joist with Adjacent Joist

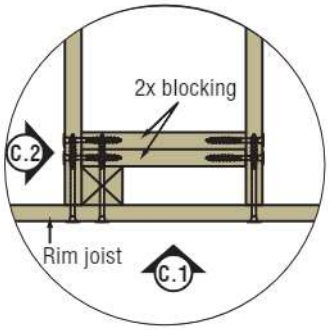

Detail C Plan View

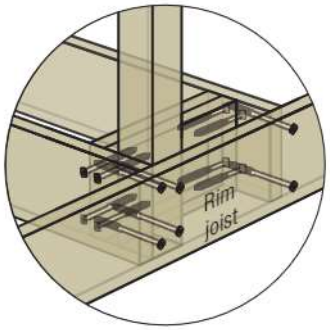

Detail C Isometric View

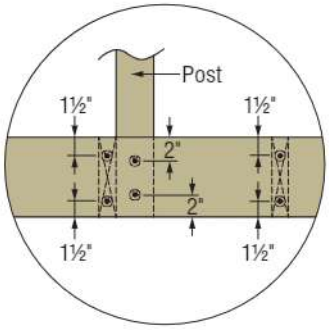

1. Rim joist to deck joist 1½" from top and bottom edges using 8" SDWS22800DB.
2. Rim joist to post and 2x blocking 2" from top and bottom edges using 8" SDWS22800DB.

Detail C.1 Front Elevation

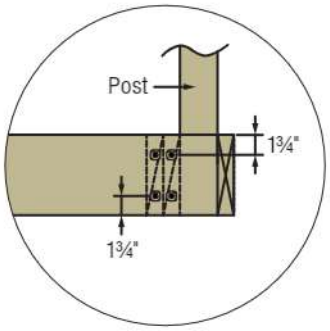

1. Deck joist to 2x blocking 1¾" from top and bottom edges using 5" SDWS22500DB.

Detail C.2 Side Elevation

Detail D — Interior Post on Rim Joist Between Joists

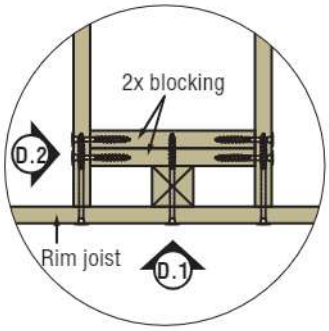

Detail D Plan View

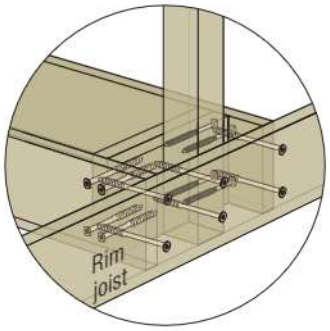

Detail D Isometric View

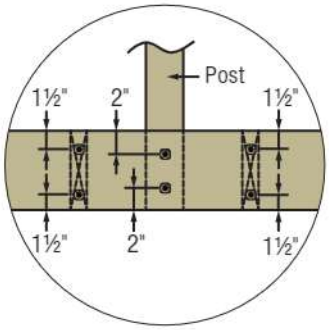

1. Rim joist to deck joists 1½" from top and bottom edges using 8" SDWS22800DB.
2. Rim joist to post and 2x blocking 2" from top and bottom edges using 8" SDWS22800DB.

Detail D.1 Front Elevation

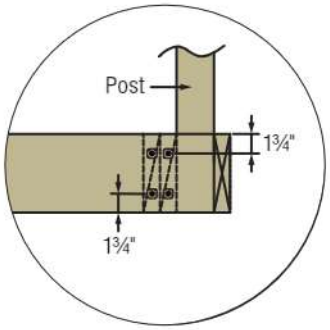

1. Deck joist to 2x blocking 1¾" from top and bottom edges using 5" SDWS22500DB.

Detail D.2 Side Elevation

C-F-2023TECHSUP © 2023 Simpson Strong-Tie Company Inc.

Strong-Drive® SDWS FRAMING Screw for Guard Rail Installations

For more information, see p. 58, C-F-2023 *Fastening Systems* catalog

The Simpson Strong-Tie Strong-Drive SDWS Framing screws (SDWS16300) were evaluated for use as fasteners in the guard rail-to-post connection. SDWS Framing screws are evaluated for structural and corrosion resistance in IAPMO UES ER-192. Testing and evaluation for guard rail connections followed the sections 4.6 and 4.7 of ICC-ES AC273, Acceptance Criteria for Handrails and Guards. Details of the connection shown in figures on the following pages meet or exceed horizontal and vertical concentrated load of the 600 lb. required for wood guard rails attached to wood supporting structure with a maximum guard post spacing of 6'.

Strong-Drive SDWS FRAMING Screw
(SDWS16300)

These details are applicable to systems where the guard post has a minimum specific gravity of 0.42 (hem-fir), and the guard rail has a minimum specific gravity of 0.36 (western cedar). The guard rail must be fastened on the guard post from flush with the outer edge of the guard post to the center of the guard post surface, and may be used as the top rail, as shown the figure below, and the bottom rail of the guard assembly. The SDWS Framing screws shall be installed from the exterior side of the rail. Predrilling using a ⅛" diameter drill bit may be required to prevent rail splitting. Install screws at a 30° angle into the post, making sure screws seat/finish 1" from where the rails join the post. A cap rail was not included in the testing, and if installed, a cap rail would further enhance the performance of the guard system.

Code-Compliant Handrail Connection Details

Installation Scope:

- Maximum guard post spacing of 6'
- Nominal 2x4 top and bottom guard rail (AWC, DCA6)
- Nominal 4x4 guard post, min. specific gravity 0.42; minimum guard rail specific gravity 0.36

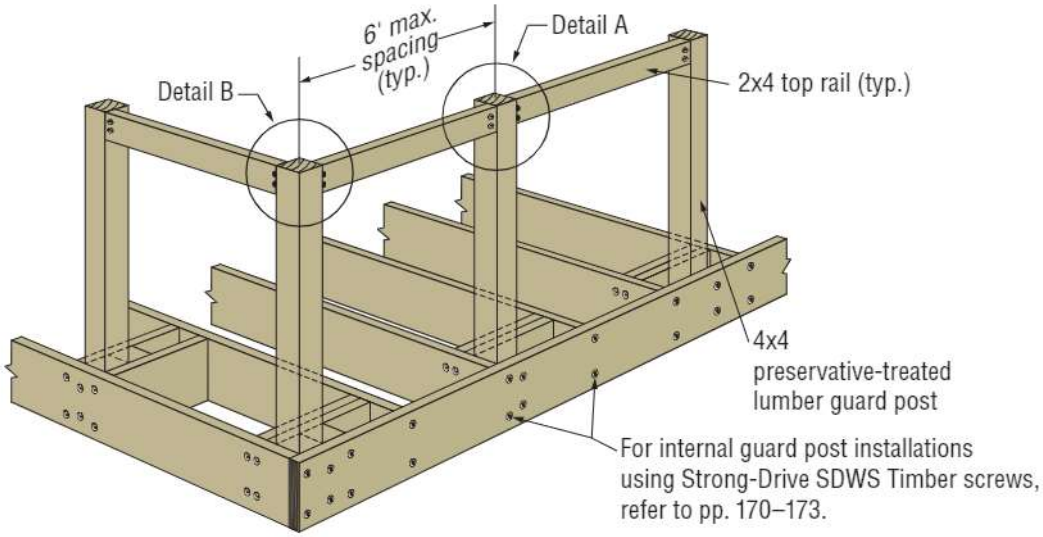

Detail	Length (in.)	Model No.	Quantity Required
A	3	SDWS16300	2
B			

C-F-2023TECHSUP © 2023 Simpson Strong-Tie Company Inc.

Strong-Drive®
SDWS **FRAMING** Screw for Guard Rail Installations (cont.)

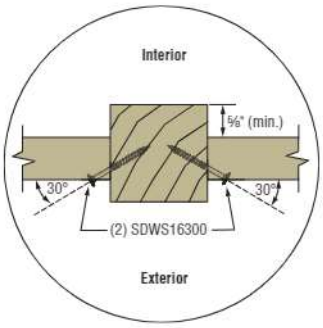

Detail A: Plan View

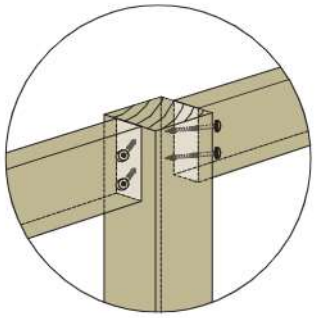

Detail A: Rail-to-Post Perspective View

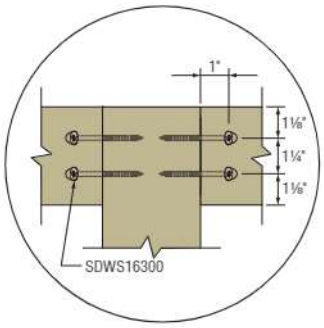

Detail A: Elevation View

1. 4x4 post opposing screws, 1⅛" from top and bottom edges using 3" SDWS16300.
2. Install 1" from where guard rails join guard post at 30° angle.

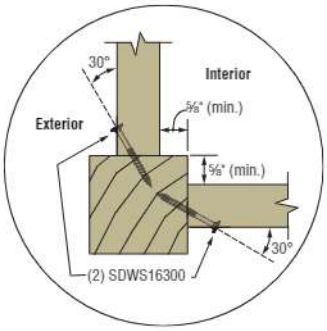

Detail B: Plan View

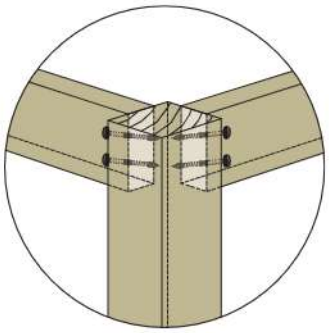

Detail B: Perspective View

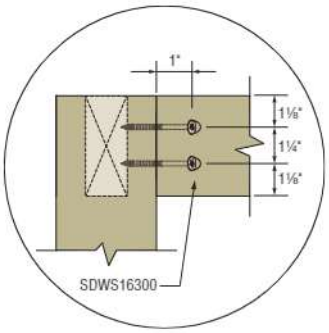

Detail B: Elevation View (Front)

1. Fasten guard rail to guard post 1⅛" from top and bottom edges using 3" SDWS16300.
2. Install 1" from where guard rails join guard post at 30° angle into post.

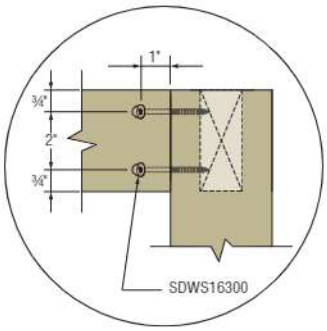

Detail B: Elevation View (Side)

1. Fasten guard rail to guard post ¾" from top and bottom edge using 3" SDWS16300.
2. Install 1" from where guard rails join guard post at 30° angle into post.

C-F-2023TECHSUP © 2023 Simpson Strong-Tie Company Inc.

Fasteners for Wood Baluster Installations

The Simpson Strong-Tie Strong-Drive® SDWS Framing screws (SDWS16212), Deck-Drive™ DSV Wood screw (DSVT212) and Deck-Drive DWP Wood SS screw (S08250WP, T08250WP) were evaluated for use as fasteners in the wood baluster-to-top and bottom rail connections.

The proposed fasteners — SDWS16212, DSVT212, S08250DWP and T08250WP — can be used to fasten wooden balusters to wooden rails using one screw in each end of the baluster. For a nominal 2x2 baluster, the screws can be located on center of the baluster width, not closer than ⅞" to the baluster end, and not closer than ⅜" to the edge of the rail. Predrilling may be required to prevent baluster splitting.

Evaluation for the wood baluster connections utilized the geometry of ASTM E935-Standard Test Methods for Performance of Permanent Metal Railing Systems and Rails for Buildings as prescribed by ICC-ES AC273. Details of the connection shown in figures on the following pages meet or exceed the load of 150 lb. applied to a one square foot area normal to the infill, as required for wood balusters with a maximum spacing of 4" (per DCA6 requirement). To maximize the connection load, it is assumed that 150 lb. is applied to two balusters at one end of the baluster pair, producing a maximum withdrawal force of 62 lb.

Strong-Drive SDWS FRAMING Screw
(see p. 58, C-F-2023 catalog)

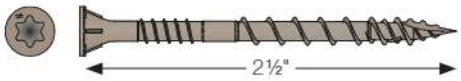

Deck-Drive DSV WOOD Screw
(see p. 76, C-F-2023 catalog)

Deck-Drive DWP WOOD SS Screw
(see pp. 72–75, C-F-2023 catalog)

Code-Compliant Baluster Connection Details

Installation Scope:

- Maximum space between adjacent balusters is less than 4" (AWC, DCA6).
- Baluster is nominal 2x2 (1.5" x 1.5" actual, per AWC, DCA6).
- Each of the screws has 1" of thread length embedment in the main member based on nominal baluster thickness of 1.5".
- Baluster and guard rail min. specific gravity of 0.36.

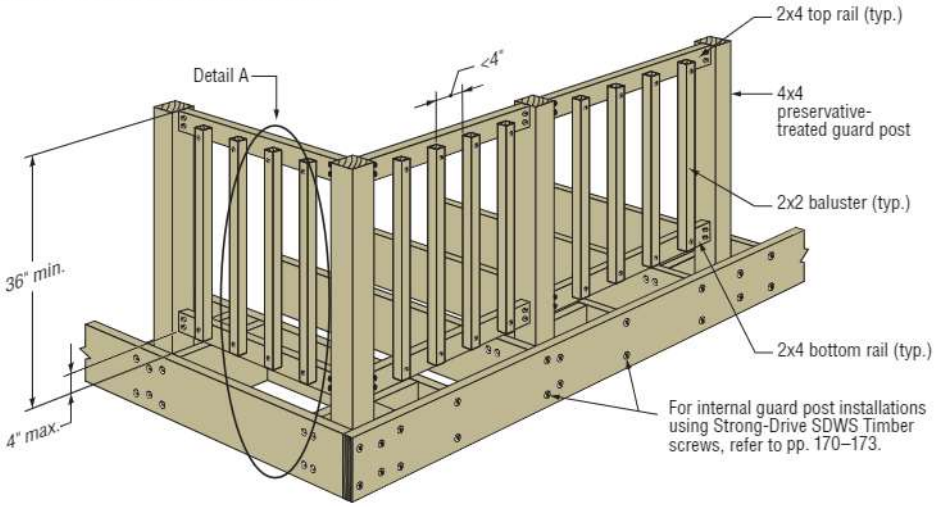

Overall Perspective View of Deck with Baluster Detail

C-F-2023TECHSUP © 2023 Simpson Strong-Tie Company Inc.

Fasteners for Wood Baluster Installations (cont.)

The following table indicates the number of screws required to meet the installation requirements of the baluster detail.

Fastener Option	Detail	Model No.	Quantity Required per Baluster	Length (in.)	Head Diameter (in.)
1	A	SDWS16212	2	2½	0.450
2		DSVT212			0.330
3		S08250WP			0.335
4		T0825WP			0.335

The results of the withdrawal analysis show that the DSVT212, SDWS16212 and S08250WP have allowable withdrawal and pull-through resistances that meet or exceed the maximum load on the baluster-to-rail connection.

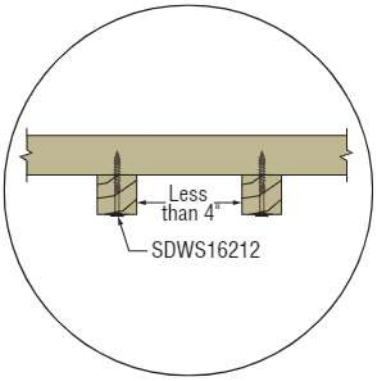

Detail A: Baluster Plan View
(SDWS16212 listed, DSVT212, S08250WP similar)

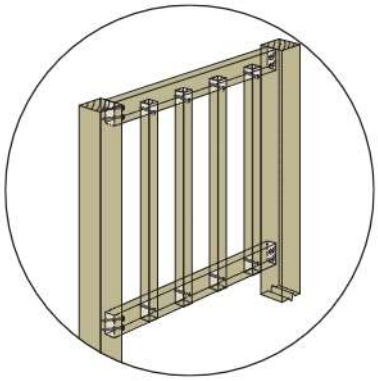

Detail A: Baluster Perspective View

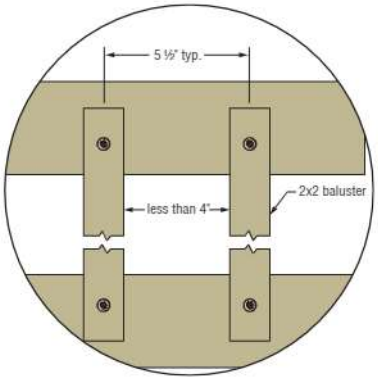

1. Space balusters less than 4" edge-to-edge.

Detail A: Baluster Elevation View (Front)

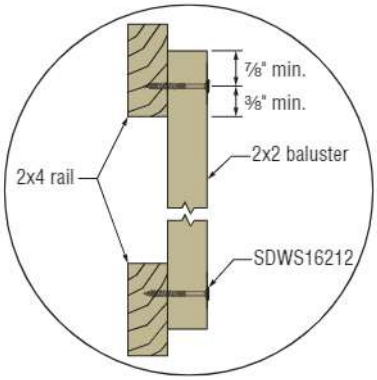

1. Fasten screws into 2x2 baluster, on center, ⅞" from each end of baluster into 2x4 top and bottom rails with SDWS16212 screws.

Detail A: Baluster Elevation View (Side)
(SDWS16212 listed, DSVT212, S08250WP similar)

C-F-2023TECHSUP © 2023 Simpson Strong-Tie Company Inc.

Strong-Drive®
SDWH **TIMBER-HEX HDG** Screw Beam-to-Top-of-Post Connection

The Simpson Strong-Tie Strong-Drive SDWH TIMBER-HEX HDG (SDWH27G) structural wood screws may be used to attach a 6x or 8x beam to the top of a post. The screws are available with a hot-dip galvanized coating in accordance with ASTM A153, Class C, suitable for severe exposure applications including preservative treated woods in general exterior construction (AWPA UC4C). The 8" – 12" SDWH27G fasteners are the subject of IAPMO UES ER-192.

See illustrations for two beam-to-post conditions using the SDWH27G to make the connection. Minimum fastener spacing requirements are shown below. The following table provides allowable shear and uplift loads tested in accordance with ICC-ES AC233, when installed through the top of a wood beam into the end grain of a wood post.

For more information, see p. 63, C-F-2023 *Fastening Systems* catalog

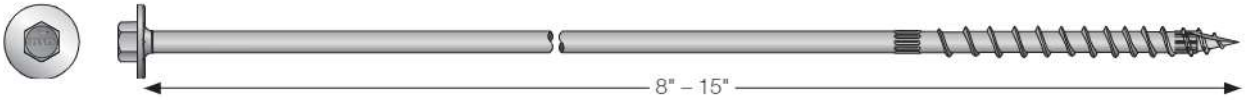

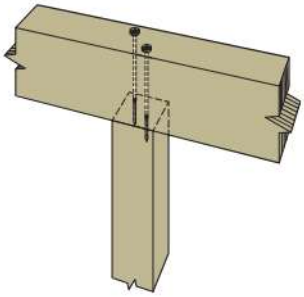

Continuous Beam over Post

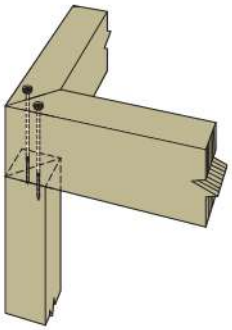

Mitered Beam over Corner Post

Beam-to-Post Connection

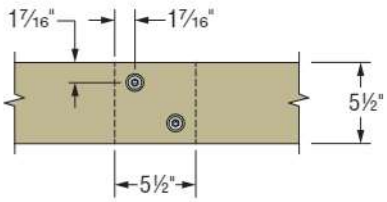

Continuous Beam over Post
(6x shown, 8x similar)

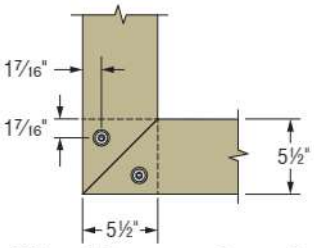

Mitered Beam over Corner Post
(6x shown, 8x similar)

Plan View

SDWH Timber-Hex HDG — Allowable Uplift Loads for Beam-to-Top-of-Post Connections

Screw Length (in.)	Model No.	Thread Length (in.)	Screws per Post	Maximum Beam Depth (in.)	Reference DFL/SP Allowable Loads per Post (lb.)			
					Mitered Beam over Corner Post		Continuous Beam	
					Uplift	Shear	Uplift	Shear
8	SDWH27800G	3	2	5	905	665	920	725
10	SDWH271000G	3	2	7				
12	SDWH271200G	3	2	9				
15	SDWH271500G	3	2	12				

1. Allowable loads are shown at the wood load duration factor of $C_D = 1.0$. Loads may be increased for load duration per the building code up to $C_D = 1.6$. Tabulated values must be multiplied by all applicable adjustment factors per NDS.
2. Tabulated loads are based on entire threaded length installed into post.
3. For in-service moisture content greater than 19%: shear $C_M = 0.70$, withdrawal $C_M = 0.65$.
4. Tabulated shear loads are for the beam loaded parallel or perpendicular to grain with the SDWH27G embedded in the end grain of the post.
5. Tabulated loads are total for the connection, not per screw.
6. Maximum beam depths account for no countersinking of the screw. Screws may be countersunk a maximum of ½" depth with no reduction in allowable loads which will allow the 8", 10" and 12" screw lengths to be installed in 6x, 8x, 10x and 12x nominal beam depths, respectively.

C-F-2023TECHSUP © 2023 Simpson Strong-Tie Company Inc.

Strong-Drive®
SDWH TIMBER-HEX HDG Screw for Square Piling

SDWH Timber-HEX HDG

One-Sided Stringers

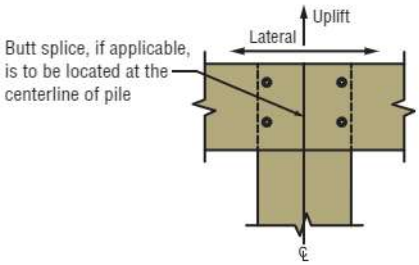

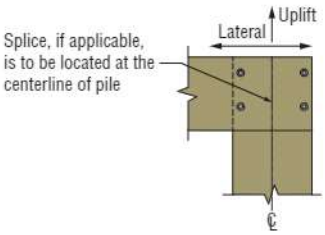

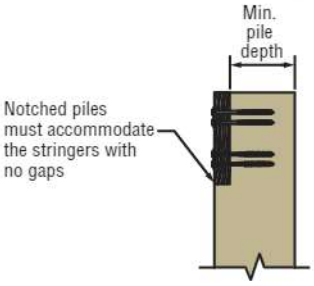

Square Piles — Loads for One-Sided Stringer-to-Pile Connection

Pile Size (in.)	Total Stringers — Qty. and Size (in.)	Stringer Material	Total Fasteners — Qty. and Model	Notched Pile ?	Minimum Notched Pile Depth (in.)	Detail No.	Allowable Connection Loads (lb.)					
							Uplift			Lateral		
							Continuous and Lap	Butt[7]	End	Continuous and Lap	Butt[7]	End
8	(1) 2 x 10	SP	(4) SDWH27600G	Y	—	SQ1	1,555	1,505	780	2,020	1,670	1,010
8	(1) 2 x 10	SP	(4) SDWH27600G	N	6½		2,020	1,445	1,010	2,020	1,540	1,010
8	(2) 2 x 10	SP	(4) SDWH27600G	Y	5		1,570	1,570	1,025	1,710	1,565	995
8	(1) 4 x 10	DFL	(4) SDWH27600G	Y	4		1,605	1,095	805	1,825	1,560	915
8	(1) 1.75 x 9.5	LVL / LSL	(4) SDWH27600G	Y	6¼		1,425	1,425	715	2,090	2,090	1045
8	(2) 1.75 x 9.5	LVL / LSL	(4) SDWH27600G	Y	4½		1,605	1,095	805	1,825	1,560	915
8	(1) 3.5 x 9.25	PSL PLUS	(4) SDWH27600G	Y	4½		1,695	1,405	850	1,615	1,250	810
8	(1) 3.125 – 3.5 x 9.5	Glulam	(4) SDWH27600G	Y	4½		1,520	1,500	760	1,640	1,505	820
10	(1) 2 x 10	SP	(4) SDWH27600G	N	—	SQ2	2,020	1,445	1,010	2,020	1,540	1,010
10	(1) 2 x 10	SP	(4) SDWH27600G	Y	8½		1,555	1,505	780	2,020	1,670	1,010
10	(2) 2 x 10	SP	(4) SDWH27600G	Y	7		2,045	1,655	1,025	1,985	1,565	995
10	(3) 2 x 10	SP	(4) SDWH27800G	Y	5½		2,390	1,680	1,195	2,310	2,030	1,155
10	(1) 4 x 10	DFL	(4) SDWH27800G	Y	6		1,605	1,095	805	1,825	1,560	915
10	(1) 1.75 x 9.5	LVL / LSL	(4) SDWH27600G	Y	8¼		1,425	1,425	715	2,090	2,090	1,045
10	(2) 1.75 x 9.5	LVL / LSL	(4) SDWH27800G	Y	6½		1,605	1,095	805	1,825	1,560	915
10	(1) 3.5 x 9.25	PSL PLUS	(4) SDWH27800G	Y	6½		1,695	1,405	850	1,615	1,250	810
10	(1) 3.125 – 3.5 x 9.5	Glulam	(4) SDWH27800G	Y	6½		1,520	1,500	760	1,640	1,505	820
10	(3) 1.75 x 9.5	LVL / LSL	(4) SDWH27800G	Y	4¾		1,605	1,420	805	1,520	1,520	760
10	(1) 5.25 x 9.25	PSL PLUS	(4) SDWH27800G	Y	4¾		1,605	1,420	805	1,520	1,520	760
10	(1) 5.125 – 5.5 x 9.5	Glulam	(4) SDWH27800G	Y	4½		2,170	1,810	1,085	2,000	1,855	1,000
12	(1) 2 x 10	SP	(4) SDWH27600G	N	—		2,020	1,445	1,010	2,020	1,540	1,010
12	(1) 2 x 10	SP	(4) SDWH27600G	Y	10½		1,555	1,505	780	2,020	1,670	1,010
12	(2) 2 x 10	SP	(4) SDWH27600G	Y	9		2,045	1,655	1,025	1,985	1,565	995
12	(3) 2 x 10	SP	(4) SDWH27800G	Y	7½		2,390	1,680	1,195	2,310	2,030	1,155
12	(1) 4 x 10	DFL	(4) SDWH27800G	Y	8		1,605	1,095	805	1,825	1,560	915
12	(1) 1.75 x 9.5	LVL / LSL	(4) SDWH27600G	Y	10¼		1,425	1,425	715	2,090	2,090	1045
12	(2) 1.75 x 9.5	LVL / LSL	(4) SDWH27800G	Y	8½		1,605	1,095	805	1,825	1,560	915
12	(1) 3.5 x 9.25	PSL PLUS	(4) SDWH27800G	Y	8½		1,695	1,405	850	1,615	1,250	810
12	(1) 3.125 – 3.5 x 9.5	Glulam	(4) SDWH27800G	Y	8½		1,520	1,500	760	1,640	1,505	820

C-F-2023TECHSUP © 2023 Simpson Strong-Tie Company Inc.

Strong-Drive®
SDWH TIMBER-HEX HDG Screw for Square Piling (cont.)

One-Sided Stringers

Square Piles — Loads for One-Sided Stringer-to-Pile Connection (cont.)

Pile Size (in.)	Total Stringers — Qty. and Size (in.)	Stringer Material	Total Fasteners — Qty. and Model	Notched Pile ?	Minimum Notched Pile Depth (in.)	Detail No.	Allowable Connection Loads (lb.)					
							Uplift			Lateral		
							Continuous and Lap	Butt[7]	End	Continuous and Lap	Butt[7]	End
12	(3) 1.75 x 9.5	LVL / LSL	(4) SDWH27800G	Y	6¾	SQ2	1,605	1,420	805	1,520	1,520	760
12	(1) 5.25 x 9.25	PSL PLUS	(4) SDWH27800G	Y	6¾		1,605	1,420	805	1,520	1,520	760
12	(1) 5.125 – 5.5 x 9.5	Glulam	(4) SDWH27800G	Y	6½		2,170	1,810	1,085	2,000	1,855	1,000

1. Design of framing (stringers) and columns is by others.
2. Wooden piles and framing are Southern Pine (SP) or engineered wood products with minimum specific gravity or equivalent specific gravity of 0.50.
3. Use the screw length cited in the tables and details.
4. Where noted, dimensions and allowable connection loads are based on notched piles that must accommodate the stringers with adequate bearing and no gaps.
5. Notched piles shall not be notched such that more than 50% of the cross section is removed.
6. Unnotched piles may be assigned notched pile loads if the unnotched pile dimensions meet or exceed the maximum dimensions for the notched pile and fastener placement is the same.
7. Tabulated values shall be multiplied by all applicable service adjustment factors per the NDS. Allowable loads are shown with a load duration factor of C_D = 1.0. Loads may be increased for load duration per the building code up to C_D = 1.6. For service moisture content greater than 19%, use C_M=0.70.
8. When the connection on an unnotched pile is simultaneously loaded in more than one direction, the allowable load must be evaluated using the unity equation: (Design uplift/Allowable uplift)+(Design lateral/Allowable lateral) + (Design vertical/Allowable vertical) ≤ 1.0. If notched piles are used, the last term is zero.
9. For stringer thickness at least 1.5" and less than 3", use the table values for the conditions with a single 2x stringer.
10. Butt loads are based on all stringer members butted. For multi-ply stringers where one stringer is continuous, use the tabulated loads in the "Continuous and Lap" column. Refer to figures for details.

One Sided, Single-Ply Stringers — Continuous Condition (End Condition Similar)

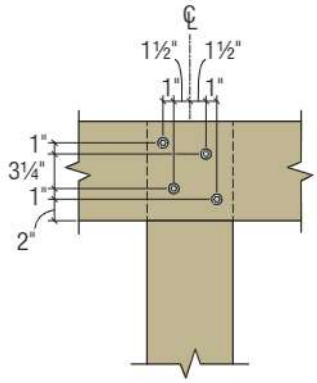

Detail SQ1

8" Square Pile (min.)

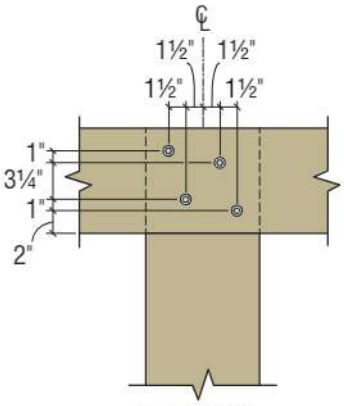

Detail SQ2

10" and 12" Square Pile (min.)

Unnotched

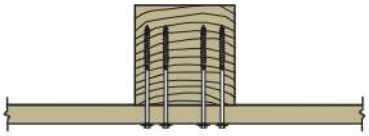

Unnotched, Continuous

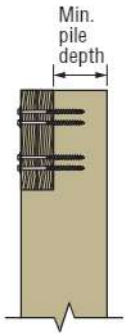

Notched

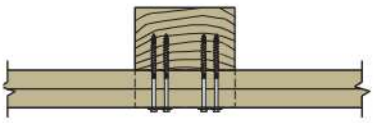

Notched, Continuous

Notched, Butt

Notched, Lap

(Inner Ply Butt shown, Outer Ply Continuous similar)

C-F-2023TECHSUP © 2023 Simpson Strong-Tie Company Inc.

Strong-Drive®
SDWH **TIMBER-HEX HDG** Screw for Square Piling (cont.)

Two-Sided Stringers

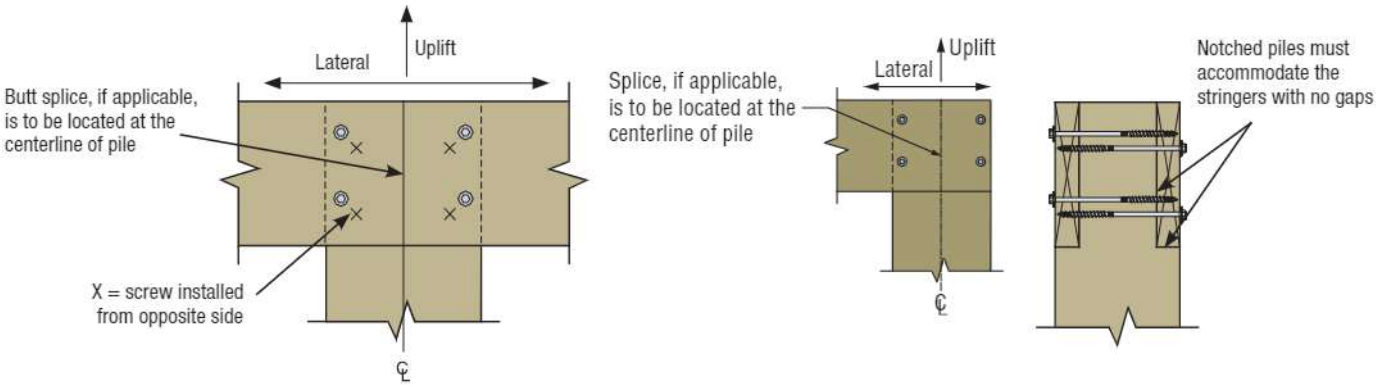

Square Piles — Loads for Two-Sided Stringer-to-Pile Connection

Pile Size (in.)	Total Stringers — Qty. and Size (in.)	Detail No.	Total Fasteners — Qty. and Model No.	Allowable Continuous Connection Loads (lb.)					
				Uplift			Lateral		
				Continuous	Butt	End	Continuous	Butt	End
8	(2) 2 x 10	SQ3	(8) SDWH27800G	3,455	2,370	2,085	4,035	3,750	3,380
10	(2) 2 x 10	SQ4	(8) SDWH271000G	4,405	3,290	2,380	4,705	4,290	4,125
12	(2) 2 x 10	SQ5	(8) SDWH271200G	4,140	3,480	2,490	5,095	5,095	4,205
10	(4) 2 x 10	SQ6	(8) SDWH271000G	5,100	4,160	3,095	5,870	4,900	3,685
12	(4) 2 x 10	SQ7	(8) SDWH271200G	7,840	5,530	4,600	7,090	6,025	5,160
12	(4) 2 x 12	SQ8	(12) SDWH271200G	9,705	5,920	5,275	8,305	8,305	7,640

1. Design of framing (stringers) and columns is by others.
2. Wooden piles and framing are Southern Pine (SP) or engineered wood products with minimum specific gravity or equivalent specific gravity of 0.55.
3. Use the screw lengths cited in the tables and details.
4. Tabulated loads are total load, not per side, and are based on double shear action with the same size and quantity of stringers on opposing faces of the pile.
5. Dimensions and allowable connection loads are based on notched piles that must accommodate the stringers with adequate bearing and no gaps.
6. Notched piles shall not be notched such that more than 50% of the cross section is removed.
7. Unnotched piles may be assigned notched pile loads if the unnotched pile dimensions meet or exceed the maximum dimensions for the notched pile and fastener placement is the same.
8. Tabulated values shall be multiplied by all applicable service adjustment factors per the NDS. Allowable loads are shown with a load duration factor of C_D=1.0. Loads may be increased for load duration per the building code up to C_D=1.6. For service moisture content greater than 19%, use C_M=0.70.
9. When the connection on an unnotched pile is simultaneously loaded in more than one direction, the allowable load must be evaluated using the unity equation: (Design uplift/Allowable uplift) + (Design lateral/Allowable lateral) + (Design vertical/Allowable vertical) ≤ 1.0. If notched piles are used, the last term is zero.
10. For stringer thickness at least 1.5" and less than 3", use the table values for the conditions with a single 2x stringer.
11. Butt loads are based on all stringer members butted. For multi-ply stringers where one stringer is continuous, use the tabulated loads in the "Continuous and Lap" column. Refer to figures for details.

C-F-2023TECHSUP © 2023 Simpson Strong-Tie Company Inc.

Strong-Drive®
SDWH **TIMBER-HEX HDG** Screw for Square Piling (cont.)

Two-Sided, Single-Ply Stringers — Continuous Condition (End Condition Similar)

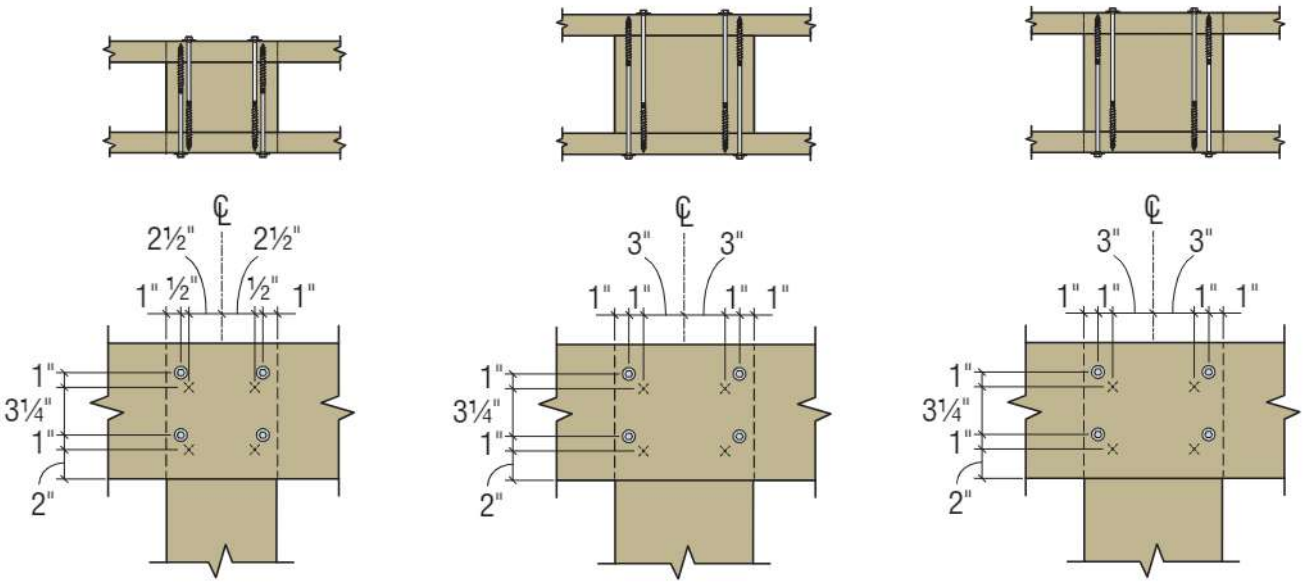

Detail SQ3 — 8" Square Pile
Two-Sided 2x10
(8) 8" SDWH Timber-Hex HDG Screws

Detail SQ4 — 10" Square Pile
Two-Sided 2x10
(8) 10" SDWH Timber-Hex HDG Screws

Detail SQ5 — 12" Square Pile
Two-Sided 2x10
(8) 12" SDWH Timber-Hex HDG Screws

Two-Sided, Double-Ply Stringers — Continuous Condition (End Condition Similar)

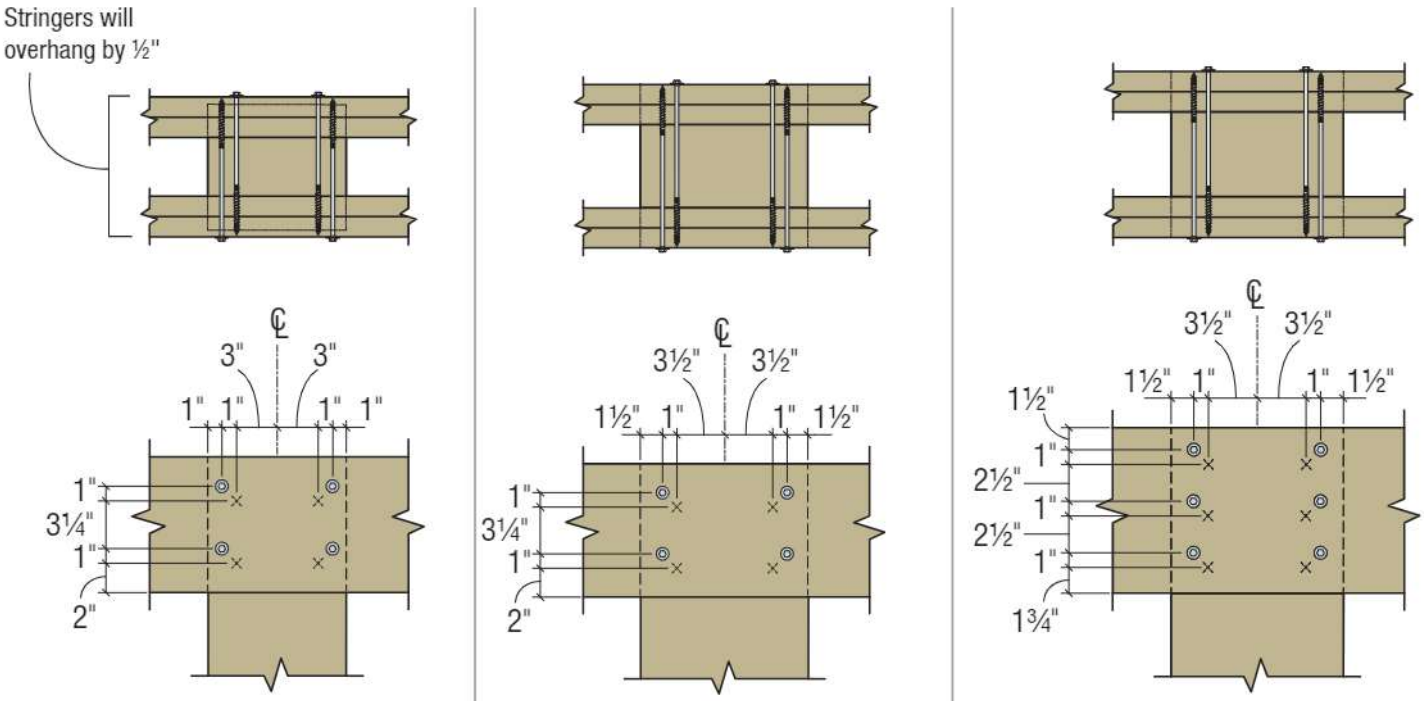

Detail SQ6 — 10" Square Pile
Two-Sided, Double 2x10
(8) 10" SDWH Timber-Hex HDG Screws

Detail SQ7 — 12" Square Pile
Two-Sided, Double 2x10
(8) 12" SDWH Timber-Hex HDG Screws

Detail SQ8 — 12" Square Pile
Two-Sided, Double 2x12
(12) 12" SDWH Timber-Hex HDG Screws

C-F-2023TECHSUP © 2023 Simpson Strong-Tie Company Inc.

Strong-Drive®
SDWH TIMBER-HEX HDG Screw for Square Piling (cont.)

Multiple-Sided, Multi-Ply Stringers — Corner/End Condition

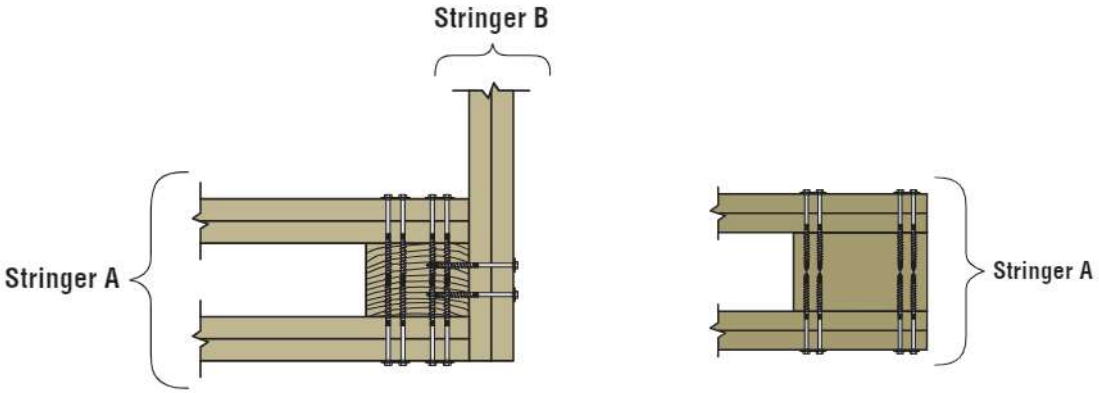

Square Piles — Loads for End/Corner Connections

Pile Size (in.)	Stringer Configuration					Notched Pile ?	Detail No.	Allowable Connection Loads (lb.)			
	Stringer A			Stringer B				Uplift		Lateral	
	# of Sides	Plies — Qty. and Size (in.)	Fasteners — Qty. and Model	Plies — Qty. and Size (in.)	Fasteners — Qty. and Model			A Side	B Side	A Side	B Side
8	2	(1) 2 x 10	(8) SDWH27400G	(1) 2 x 10	(2) SDWH27400G	Y	SC1	2,050	895	1,700	850
8	2	(1) 2 x 10	(8) SDWH27800G	(1) 2 x 10	(2) SDWH27400G			2,330	895	2,865	850
8	1	(1) 2 x 10	(4) SDWH27400G	(1) 2 x 10	(4) SDWH27400G	Y	SC4	880	880	1,320	1,320
10	2	(1) 2 x 10	(8) SDWH27400G	(1) 2 x 10	(2) SDWH27400G	Y	SC2	2,050	895	1,700	850
10	2	(1) 2 x 10	(8) SDWH271000G	(1) 2 x 10	(2) SDWH27400G			2,330	895	2,865	850
10	1	(1) 2 x 10	(4) SDWH27400G	(1) 2 x 10	(4) SDWH27400G	Y	SC5	880	880	1,320	1,320
10	2	(2) 2 x 10	(8) SDWH27600G	(1) 2 x 10	(2) SDWH27400G	Y	SC7	2,860	895	2,830	850
10	2	(2) 2 x 10	(8) SDWH271000G	(1) 2 x 10	(2) SDWH27400G			3,455	895	3,505	850
10	1	(2) 2 x 10	(8) SDWH27600G	(2) 2 x 10	(2) SDWH27600G	Y	SC9	2,860	980	2,830	1,060
10	2	(2) 2 x 10	(8) SDWH271000G	(2) 2 x 10	(2) SDWH27600G			3,455	980	3,505	1,060
10	1	(2) 2 x 10	(4) SDWH27600G	(2) 2 x 10	(4) SDWH27600G	Y	SC11	1,620	1,620	1610	1,610
12	2	(1) 2 x 10	(8) SDWH27400G	(1) 2 x 10	(2) SDWH27400G	Y	SC3	2,050	895	1,700	850
12	2	(1) 2 x 10	(8) SDWH271200G	(1) 2 x 10	(2) SDWH27400G			2,330	895	2,865	850
12	1	(1) 2 x 10	(4) SDWH27400G	(1) 2 x 10	(4) SDWH27400G	Y	SC6	880	880	1,320	1,320
12	2	(2) 2 x 10	(8) SDWH27600G	(1) 2 x 10	(2) SDWH27400G	Y	SC8	2,860	895	2,830	850
12	2	(2) 2 x 10	(8) SDWH271200G	(1) 2 x 10	(2) SDWH27400G			3,455	895	3,505	850
12	2	(2) 2 x 10	(8) SDWH27600G	(2) 2 x 10	(2) SDWH27600G	Y	SC10	2,860	980	2,830	1,060
12	2	(2) 2 x 10	(8) SDWH271200G	(2) 2 x 10	(2) SDWH27600G			3,455	980	3,505	1,060
12	1	(2) 2 x 10	(4) SDWH27600G	(2) 2 x 10	(4) SDWH27600G	Y	SC12	1,620	1,620	1,610	1,610

1. Design of framing (stringers) and columns is by others.
2. Wooden piles and framing are Southern Pine (SP) or engineered wood product with a minimum specific gravity or equivalent specific gravity of 0.55.
3. Use screw lengths cited in the tables and details.
4. Dimensions and allowable connection loads are based on notched piles that must accommodate the stringers with adequate bearing and no gaps.
5. Notched piles shall not be notched such that more than 50% of the cross section is removed.
6. Unnotched piles may be assigned notched pile loads if the unnotched pile dimensions meet or exceed the maximum dimensions for the notched pile and fastener placement is the same.
7. Tabulated values shall be multiplied by all applicable service adjustment factors per the NDS. Allowable loads are shown with a load duration factor of C_D=1.0. Loads may be increased for load duration per the building code up to C_D=1.6. For service moisture content greater than 19%, use C_M=0.70.
8. When the connection on an unnotched pile is simultaneously loaded in more than one direction, the allowable load must be evaluated using the unity equation: (Design uplift/Allowable uplift)+(Design lateral/Allowable lateral) + (Design vertical/Allowable vertical) ≤ 1.0. If notched piles are used, the vertical term is zero.
9. For stringer thickness at least 1.5" and less than 3", use the table values for the conditions with a single 2x stringer.

C-F-2023TECHSUP © 2023 Simpson Strong-Tie Company Inc.

Strong-Drive®
SDWH TIMBER-HEX HDG Screw for Square Piling (cont.)

Multiple-Sided, Single-Ply Stringer — Corner/End Condition

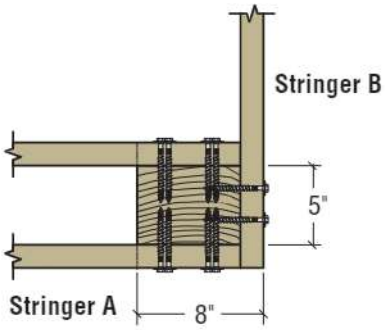

Plan

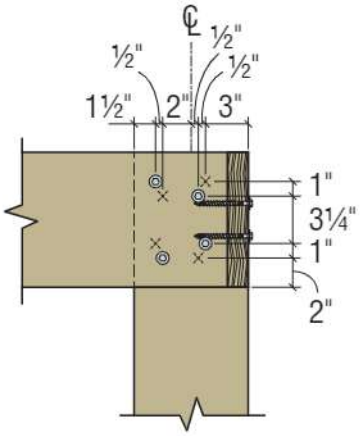

Stringer A Elevation

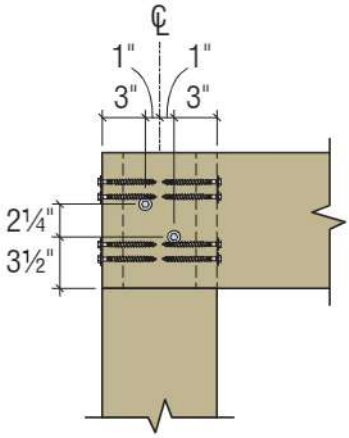

Stringer B Elevation

Detail SC1 — 8" Square Pile

Side A: (8) 4" or 8" SDWH Timber-Hex HDG Screws

Side B: (2) 4" SDWH Timber-Hex HDG Screws

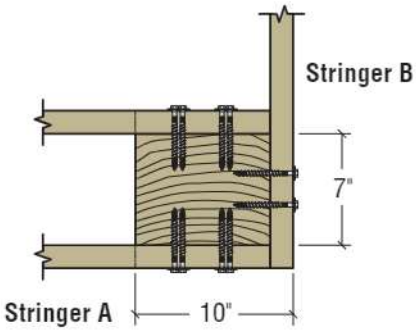

Plan

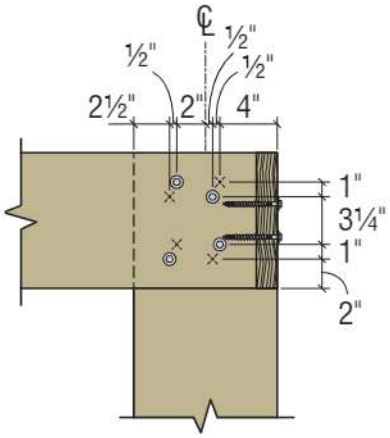

Stringer A Elevation

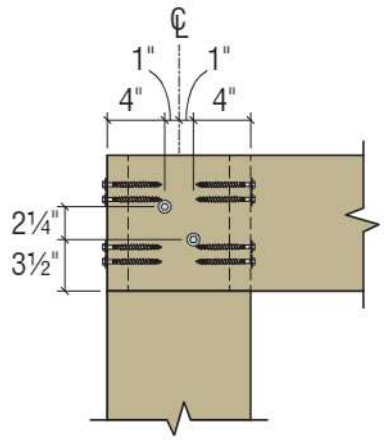

Stringer B Elevation

Detail SC2 — 10" Square Pile

Side A: (8) 4" or 10" SDWH Timber-Hex HDG Screws

Side B: (2) 4" SDWH Timber-Hex HDG Screws

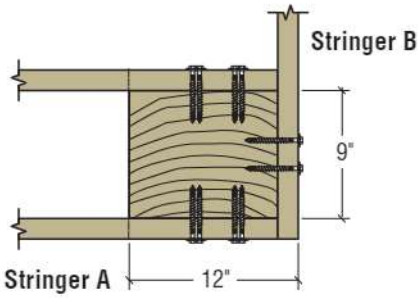

Plan

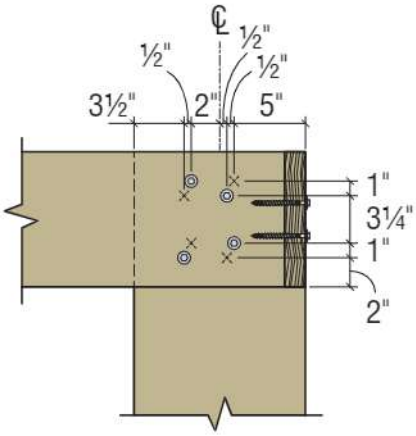

Stringer A Elevation

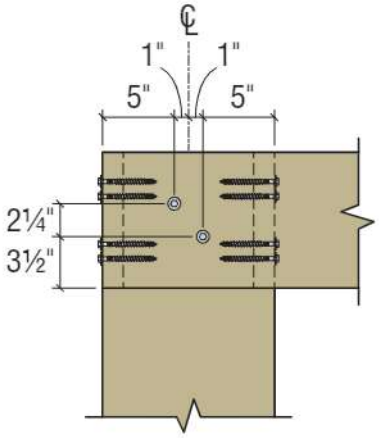

Stringer B Elevation

Detail SC3 — 12" Square Pile

Side A: (8) 4" or 12" SDWH Timber-Hex HDG Screws

Side B: (2) 4" SDWH Timber-Hex HDG Screws

C-F-2023TECHSUP © 2023 Simpson Strong-Tie Company Inc.

Strong-Drive®
SDWH TIMBER-HEX HDG Screw for Square Piling (cont.)

Two-Sided, Single-Ply Stringer — Corner/End Condition

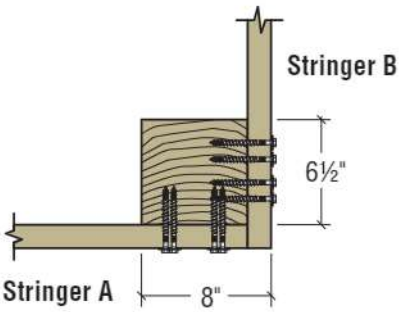

Plan

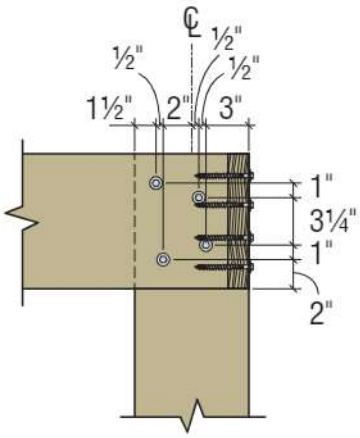

Stringer A Elevation

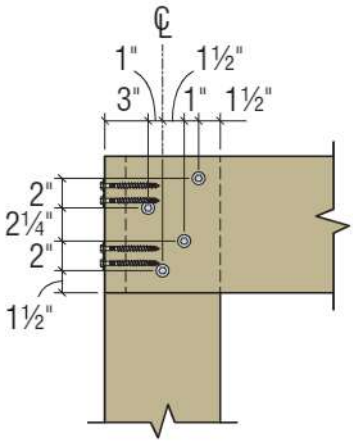

Stringer B Elevation

Detail SC4 — 8" Square Pile

Side A: (4) 4" SDWH Timber-Hex HDG Screws

Side B: (4) 4" SDWH Timber-Hex HDG Screws

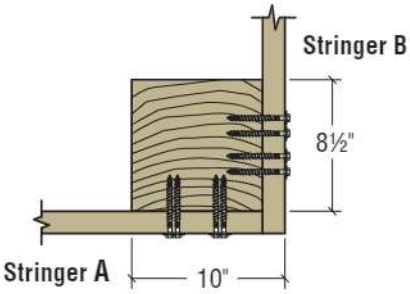

Plan

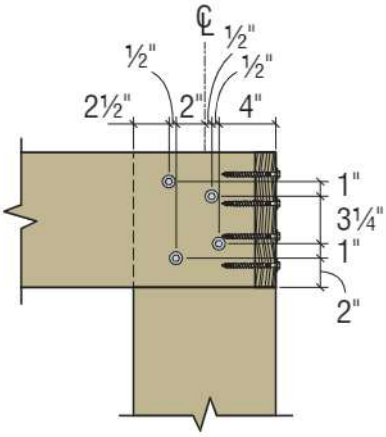

Stringer A Elevation

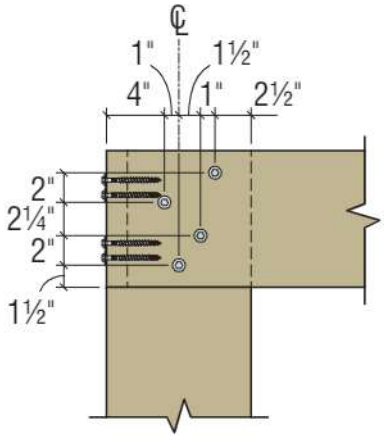

Stringer B Elevation

Detail SC5 — 10" Square Pile

Side A: (4) 4" SDWH Timber-Hex HDG Screws

Side B: (4) 4" SDWH Timber-Hex HDG Screws

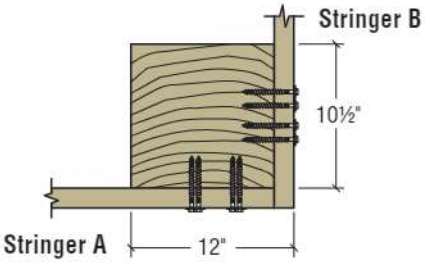

Plan

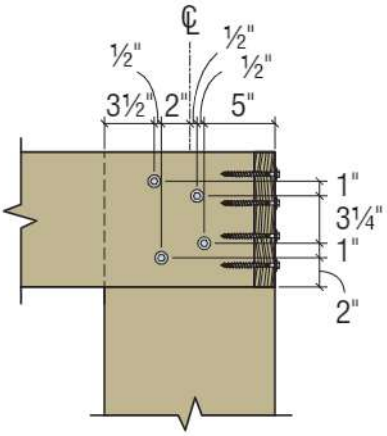

Stringer A Elevation

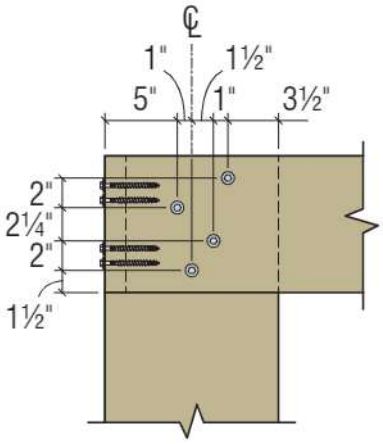

Stringer B Elevation

Detail SC6 — 12" Square Pile

Side A: (4) 4" SDWH Timber-Hex HDG Screws

Side B: (4) 4" SDWH Timber-Hex HDG Screws

C-F-2023TECHSUP © 2023 Simpson Strong-Tie Company Inc.

Strong-Drive®
SDWH TIMBER-HEX HDG Screw for Square Piling (cont.)

Two-Sided, Double-Ply and One-Sided, Single-Ply Stringers — Corner/End Condition

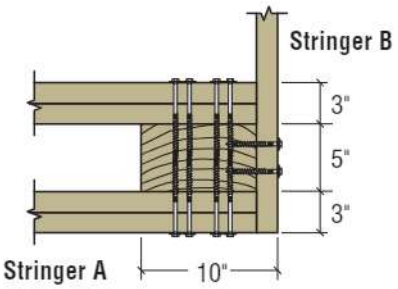

Plan

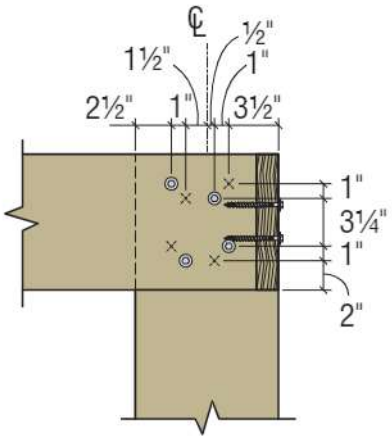

Stringer A Elevation

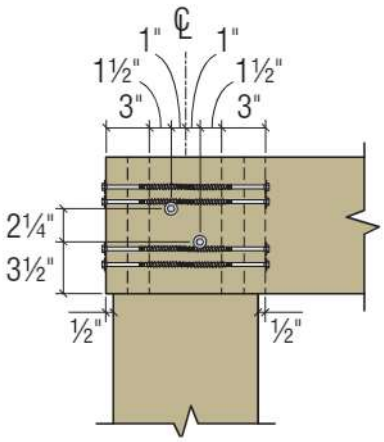

Stringer B Elevation

Detail SC7 — 10" Square Pile

Side A: (8) 4" or 8" SDWH Timber-Hex HDG Screws

Side B: (2) 4" SDWH Timber-Hex HDG Screws

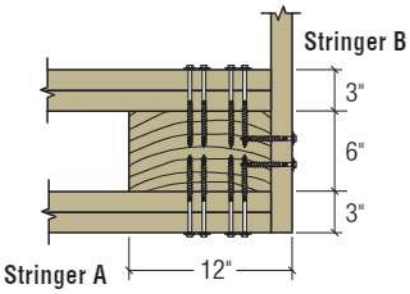

Plan

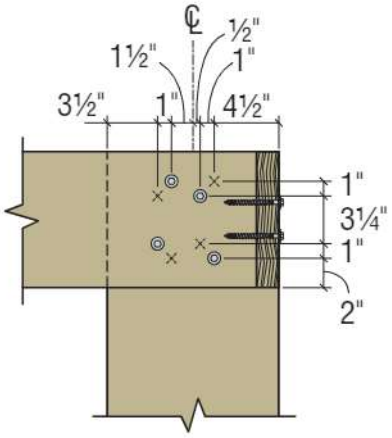

Stringer A Elevation

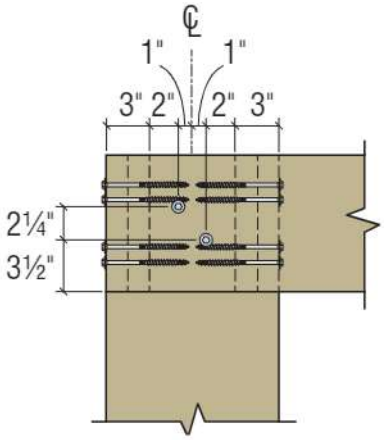

Stringer B Elevation

Detail SC8 — 12" Square Pile

Side A: (8) 6" or 10" SDWH Timber-Hex HDG Screws

Side B: (2) 4" SDWH Timber-Hex HDG Screws

C-F-2023TECHSUP © 2023 Simpson Strong-Tie Company Inc.

Strong-Drive®
SDWH **TIMBER-HEX HDG** Screw for Square Piling (cont.)

Three-Sided, Double-Ply Stringers — Corner/End Condition

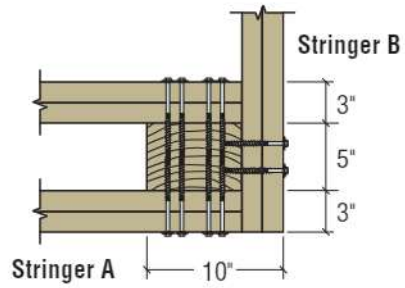

Plan

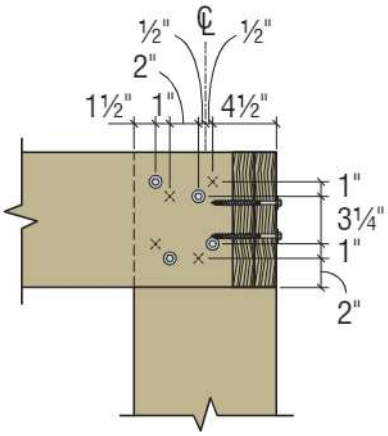

Stringer A Elevation

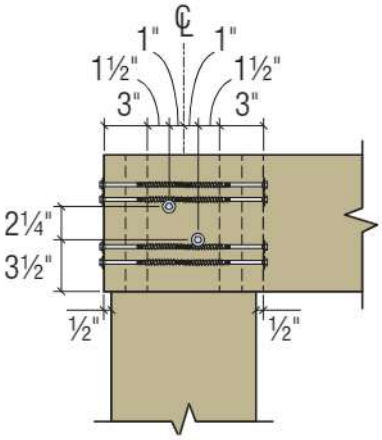

Stringer B Elevation

Detail SC9 — 10" Square Pile

Side A: (8) 6" or 10" SDWH Timber-Hex HDG Screws

Side B: (2) 4" or 6" SDWH Timber-Hex HDG Screws

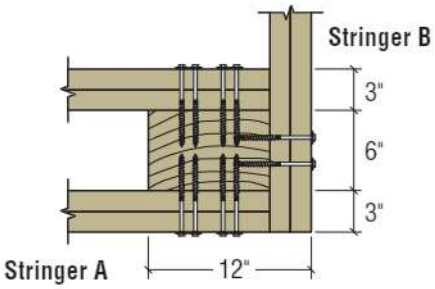

Plan

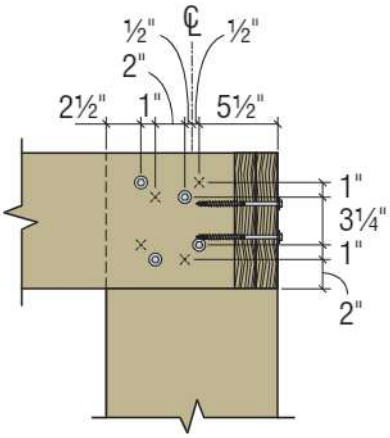

Stringer A Elevation

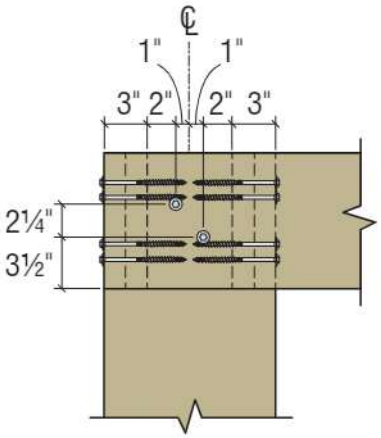

Stringer B Elevation

Detail SC10 — 12" Square Pile

Side A: (8) 6" or 12" SDWH Timber-Hex HDG Screws

Side B: (2) 4" or 6" SDWH Timber-Hex HDG Screws

C-F-2023TECHSUP © 2023 Simpson Strong-Tie Company Inc.

Strong-Drive®
SDWH **TIMBER-HEX HDG** Screw for Square Piling (cont.)

Two-Sided, Double-Ply Stringer — Corner/End Condition

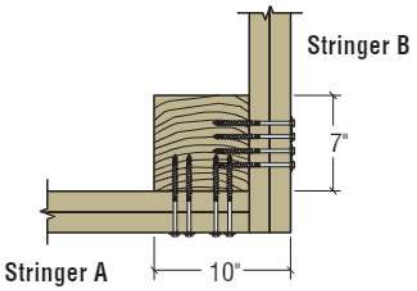

Plan

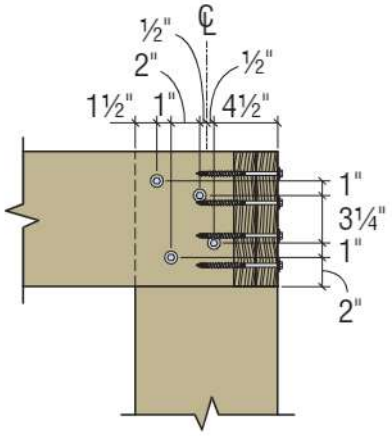

Stringer A Elevation

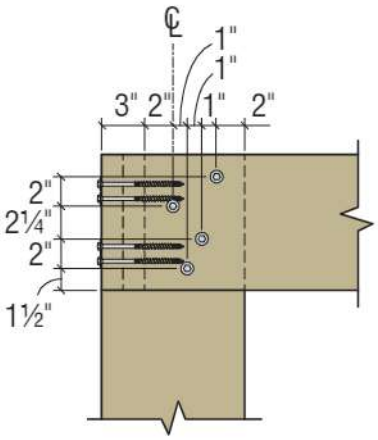

Stringer B Elevation

Detail SC11 — 10" Square Pile

Side A: (4) 10" SDWH Timber-Hex HDG Screws

Side B: (4) 6" SDWH Timber-Hex HDG Screws

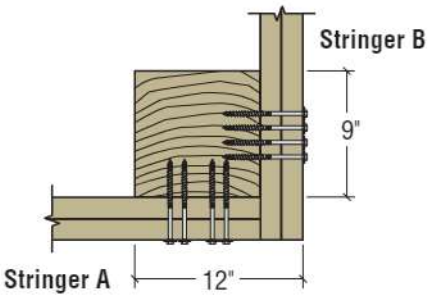

Plan

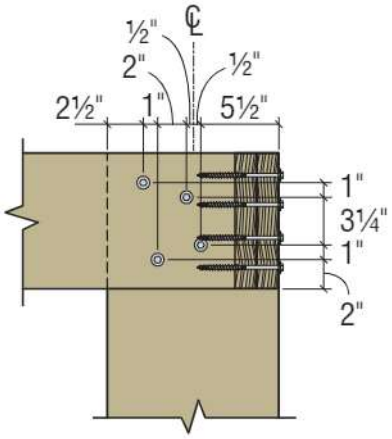

Stringer A Elevation

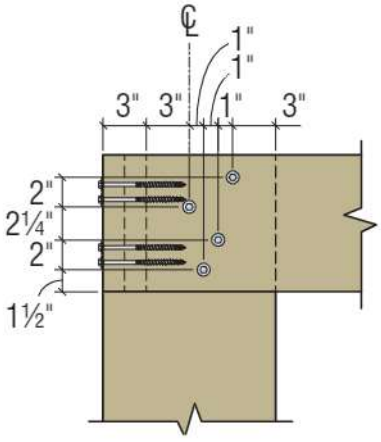

Stringer B Elevation

Detail SC12 — 12" Square Pile

Side A: (4) 6" SDWH Timber-Hex HDG Screws

Side B: (4) 6" SDWH Timber-Hex HDG Screws

C-F-2023TECHSUP © 2023 Simpson Strong-Tie Company Inc.

Strong-Drive®
SDWH **TIMBER-HEX HDG** Screw for Square Piling (cont.)

Stringer-to-Square Pile Bracing

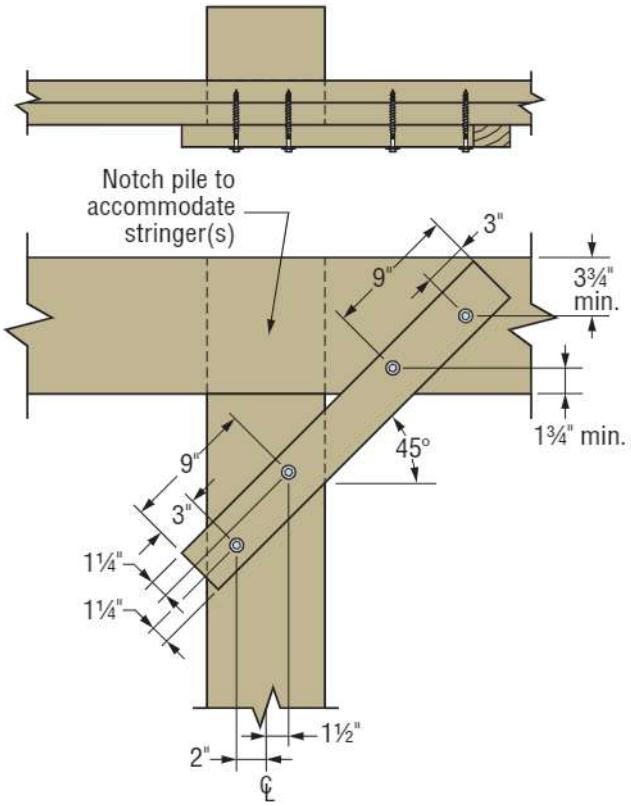

Detail SB1
2x4 Brace with (2) SDWH27400G Screws at Each End

Square Piles — Loads for Stringer-to-Square-Pile Bracing Connections

Screw Model	Brace Size (in.)	Brace Type	Number of Screws per End of Brace	Detail No.	Allowable Load in Tension or Compression (lb.)
SDWH27400G	2x4	DF or SP	2	SB1	750

1. Design of framing (stringers) and columns is by others.
2. Wooden piles and framing are Southern Pine (SP), glulam, LVL, LSL and PSL PLUS stringers and shall have minimum specific gravity or equivalent specific gravity of 0.50.
3. Use screw lengths cited in tables and details.
4. Tabulated values shall be multiplied by all applicable service adjustment factors per the NDS. Allowable loads are shown with a load duration factor of C_D=1.0. Loads may be increased for load duration per the building code up to C_D=1.6. For service moisture content greater than 19%, use C_M=0.70.
5. Minimum stringer thickness shall be 2.5" to accommodate screw length.
6. See figure for spacing requirements.

C-F-2023TECHSUP © 2023 Simpson Strong-Tie Company Inc.

Strong-Drive®
SDWH **TIMBER-HEX HDG** Screw for Round Piling

One-Sided Stringers — Continuous Condition

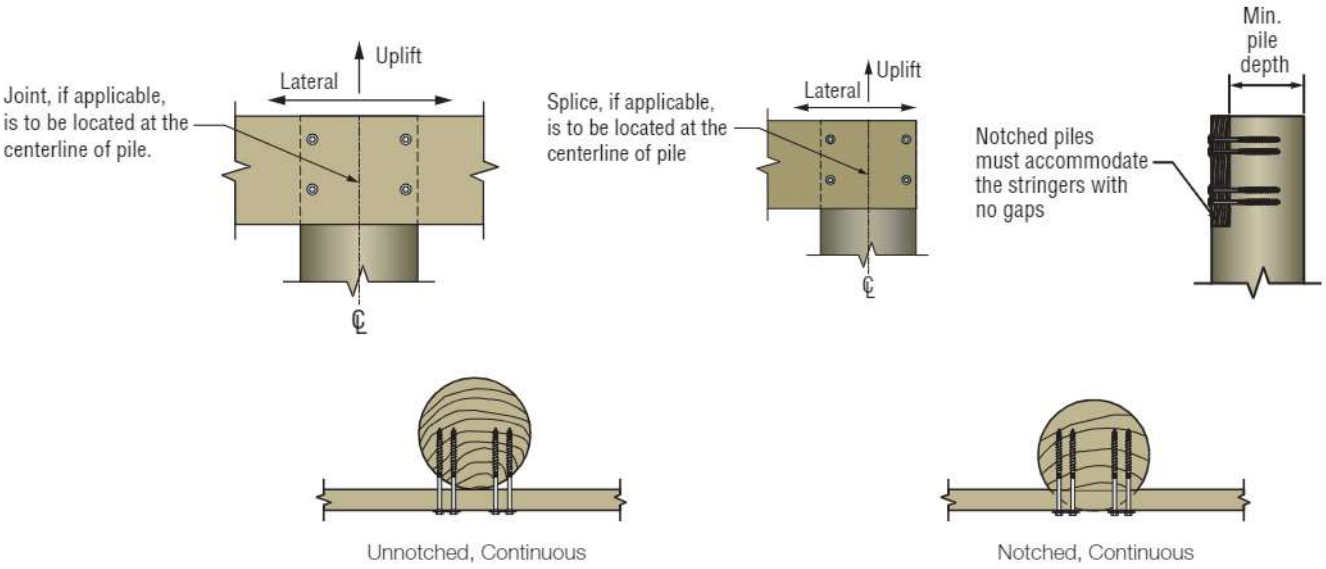

Round Piles — Loads for One-Sided, Stringer-to-Pile Connection

Pile Size (in.)	Total Stringers — Qty. and Size (in.)	Stringer Type	Total Fasteners — Qty. and Model	Notched Pile ?	Minimum Notched Pile Depth (in.)	Detail No.	Allowable Connection Loads (lb.)					
							Uplift			Lateral		
							Continuous	Butt	End	Continuous	Butt	End
8	(1) 2 x 10	SP	(4) SDWH27600G	N	—	RP1	2,020	1,445	1,010	2,020	1,540	1,010
8	(1) 2 x 10	SP	(4) SDWH27600G	Y	6½		1,555	1,505	780	2,020	1,670	1,010
8	(2) 2 x 10	SP	(4) SDWH27600G	Y	5		1,570	1,570	1,025	1,710	1,565	995
8	(1) 4 x 10	DFL	(4) SDWH27600G	Y	4½		1,605	1,095	805	1,825	1,560	915
8	(1) 1.75 x 9.5	LVL / LSL	(4) SDWH27600G	Y	6¼		1,425	1,425	715	2,090	2,090	1,045
8	(2) 1.75 x 9.5	LVL / LSL	(4) SDWH27600G	Y	4½		1,605	1,095	805	1,825	1,560	915
8	(1) 3.5 x 9.25	PSL PLUS	(4) SDWH27600G	Y	4½		1,695	1,405	850	1,615	1,250	810
8	(1) 3.125 to 3.5 x 9.5	Glulam	(4) SDWH27600G	Y	4½		1,985	1,880	995	1,445	1,445	725
10	(1) 2 x 10	SP	(4) SDWH27600G	N	—	RP2	2,020	1,445	1,010	2,020	1,540	1,010
10	(1) 2 x 10	SP	(4) SDWH27600G	Y	8½		1,555	1,505	780	2,020	1,670	1,010
10	(2) 2 x 10	SP	(4) SDWH27800G	Y	7		2,045	1,655	1,025	1,985	1,565	995
10	(3) 2 x 10	SP	(4) SDWH27800G	Y	5½		2,390	1,680	1,195	2,310	2,030	1,155
10	(1) 4 x 10	DFL	(4) SDWH27800G	Y	6½		1,605	1,095	805	1,825	1,560	915
10	(1) 1.75 x 9.5	LVL / LSL	(4) SDWH27600G	Y	8¼		1,425	1,425	715	2,090	2,090	1045
10	(2) 1.75 x 9.5	LVL / LSL	(4) SDWH27800G	Y	6½		1,605	1,095	805	1,825	1,560	915
10	(1) 3.5 x 9.25	PSL PLUS	(4) SDWH27800G	Y	6½		1,695	1,405	850	1,615	1,250	810
10	(1) 3.125 to 3.5 x 9.5	Glulam	(4) SDWH27800G	Y	6½		1,985	1,880	995	1,445	1,445	725
10	(3) 1.75 x 9.5	LVL / LSL	(4) SDWH27800G	Y	4¾		1,605	1,420	805	1,520	1,520	760
10	(1) 5.25 x 9.25	PSL PLUS	(4) SDWH27800G	Y	4¾		1,605	1,420	805	1,520	1,520	760
10	(1) 5.25 x 9.5	Glulam	(4) SDWH27800G	Y	4¾		1,420	1,400	710	2,215	1,845	1,110

C-F-2023TECHSUP © 2023 Simpson Strong-Tie Company Inc.

Strong-Drive®
SDWH **TIMBER-HEX HDG** Screw for Round Piling (cont.)

One-Sided Stringers

Round Piles — Loads for One-Sided, Stringer-to-Pile Connection (cont.)

Pile Size (in.)	Total Stringers — Qty. and Size (in.)	Stringer Type	Total Fasteners — Qty. and Model	Notched Pile ?	Minimum Notched Pile Depth (in.)	Detail No.	Allowable Connection Loads (lb.)					
							Uplift			Lateral		
							Continuous	Butt	End	Continuous	Butt	End
12	(1) 2 x 10	SP	(4) SDWH27600G	N	—	RP2	2,020	1,445	1,010	2,020	1,540	1,010
12	(1) 2 x 10	SP	(4) SDWH27600G	Y	10½		1,555	1,505	780	2,020	1,670	1,010
12	(2) 2 x 10	SP	(4) SDWH27800G	Y	9		2,045	1,655	1,025	1985	1,565	995
12	(3) 2 x 10	SP	(4) SDWH27800G	Y	7½		2,390	1,680	1,195	2,310	2,030	1,155
12	(1) 4 x 10	DFL	(4) SDWH27800G	Y	8½		1,605	1,095	805	1,825	1,560	915
12	(1) 1.75 x 9.5	LVL / LSL	(4) SDWH27600G	Y	10¼		1,425	1,425	715	2,090	2,090	1,045
12	(2) 1.75 x 9.5	LVL / LSL	(4) SDWH27800G	Y	8½		1,605	1,095	805	1,825	1,560	915
12	(1) 3.5 x 9.25	PSL PLUS	(4) SDWH27800G	Y	8½		1,695	1,405	850	1,615	1,250	810
12	(1) 3.125 to 3.5 x 9.5	Glulam	(4) SDWH27800G	Y	8½		1,985	1,880	995	1,445	1,445	725
12	(3) 1.75 x 9.5	LVL / LSL	(4) SDWH27800G	Y	6¾		1,605	1,420	805	1,520	1,520	760
12	(1) 5.25 x 9.25	PSL PLUS	(4) SDWH27800G	Y	6¾		1,605	1,420	805	1,520	1,520	760
12	(1) 5.25 x 9.5	Glulam	(4) SDWH27800G	Y	6¾		1,420	1,400	710	2,215	1,845	1,110

1. Design of framing (stringers) and columns is by others.
2. Wooden piles and framing are Southern Pine (SP) or engineered wood products with minimum specific gravity or equivalent specific gravity of 0.50.
3. Use the screw length cited in the tables and details.
4. Dimensions and allowable connection loads are based on notched piles that must accommodate the stringers with adequate bearing and no gaps.
5. Notched piles shall not be notched such that more than 50% of the cross section is removed.
6. Unnotched piles may be assigned notched pile loads if the unnotched pile dimensions meet or exceed the maximum dimensions for the notched pile and fastener placement is the same.
7. Tabulated values shall be multiplied by all applicable service adjustment factors per the NDS. Allowable loads are shown with a load duration factor of C_D = 1.0. Loads may be increased for load duration per the building code up to C_D = 1.6. For service moisture content greater than 19%, use C_M=0.70.
8. When the connection on an unnotched pile is simultaneously loaded in more than one direction, the allowable load must be evaluated using the unity equation: (Design uplift/Allowable uplift) + (Design lateral/Allowable lateral) + (Design vertical/Allowable vertical) ≤ 1.0. If notched piles are used, the last term is zero.
9. For stringer thickness at least 1.5" and less than 3", use the table values for the conditions with a single 2x stringer.
10. Butt loads are based on all stringer members butted. For multi-ply stringers where one stringer is continuous, use the tabulated loads in the "Continuous and Lap" column. Refer to figures for details.

One-Sided, Single-, Double- or Triple-Ply Stringer — Continuous Condition (End Condition Similar)

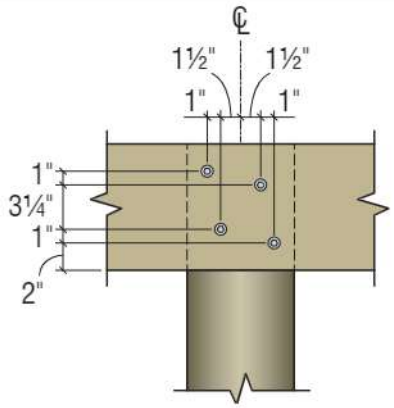

Detail RP1
8" Round Piles

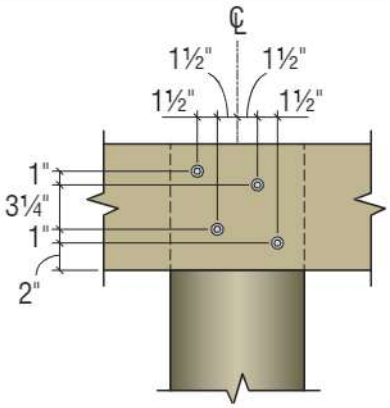

Detail RP2
10" and 12" Round Piles

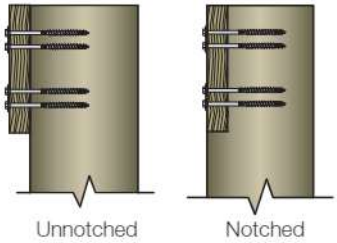

Section View

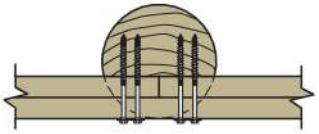

Notched, Butt

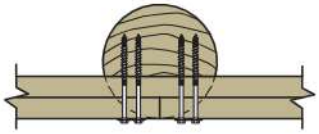

Notched, Lap
(Outer Ply Butt, Inner Ply Continuous similar)

C-F-2023TECHSUP © 2023 Simpson Strong-Tie Company Inc.

Strong-Drive®
SDWH **TIMBER-HEX HDG** Screw for Round Piling (cont.)

Two-Sided Stringers

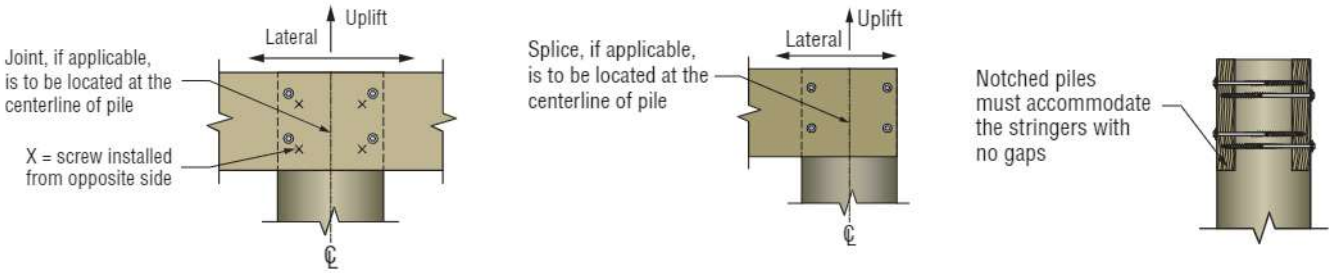

Round Pile — Loads for Two-Sided, Stringer-to-Pile Connection

Pile Size (in.)	Total Stringers — Qty. and Size (in.)	Detail	Total Fasteners — Qty. and Model	Allowable Connection Loads (lb.)					
				Uplift			Lateral		
				Continuous	Butt	End	Continuous	Butt	End
10	(2) 2 x 10	RP3	(8) SDWH271000G	3,965	2,960	2,140	3,430	3,190	2,875
12	(2) 2 x 10	RP4	(8) SDWH271200G	3,725	3,130	2,240	4,000	3,645	3,505
14	(2) 2 x 10	RP5	(8) SDWH271200G	1,865	1,565	1,120	2,000	1,825	1,755
10	(4) 2 x 10	RP6	(8) SDWH271000G	4,590	3,745	2,785	3,430	3,190	2,875
12	(4) 2 x 10	RP7	(8) SDWH271200G	7,055	4,975	4,140	4,990	4,165	3,130
12	(4) 2 x 12	RP8	(12) SDWH271200G	8,735	5,330	4,750	6,000	5,470	5,260
14	(4) 2x10	RP9	(8) SDWH271200G	3,530	2,490	2,070	2,495	2,085	1,565
14	(4) 2x12	RP10	(12) SDWH271200G	4,370	2,665	2,375	3,000	2,735	2,630

1. Design of framing (stringers) and columns is by others.
2. Wooden piles and framing are Southern Pine (SP) or engineered wood products with minimum specific gravity or equivalent specific gravity of 0.50.
3. Wooden piles and framing are Southern Pine (SP) or engineered wood products with specific gravity or equivalent specific gravity of 0.55.
4. Use the screw lengths cited in the tables and details.
5. Tabulated loads are total load, not per side, and are based on double shear action with the same size and quantity of stringers on opposing faces of the pile.
6. Dimensions and allowable connection loads are based on notched piles that must accommodate the stringers with adequate bearing and no gaps.
7. Notched piles shall not be notched such that more than 50% of the cross section is removed.
8. Unnotched piles may be assigned notched pile loads if the unnotched-pile dimensions meet or exceed the maximum dimensions for the notched pile and fastener placement is the same.
9. Tabulated values shall be multiplied by all applicable service adjustment factors per the NDS. Allowable loads are shown with a load duration factor of C_D = 1.0. Loads may be increased for load duration per the building code up to C_D = 1.6. For service moisture content greater than 19%, use C_M=0.70.
10. When the connection on an unnotched pile is simultaneously loaded in more than one direction, the allowable load must be evaluated using the unity equation: (Design uplift/Allowable uplift) + (Design lateral/Allowable lateral) + (Design vertical/Allowable vertical) ≤ 1.0. If notched piles are used, the last term is zero.
11. For stringer thickness at least 1.5" and less than 3", use the table values for the conditions with a single 2x stringer.
12. Butt loads are based on all stringer members butted. For multi-ply stringers where one stringer is continuous, use the tabulated loads in the "Continuous and Lap" column. Refer to figures for details.

C-F-2023TECHSUP © 2023 Simpson Strong-Tie Company Inc.

Strong-Drive®
SDWH **TIMBER-HEX HDG** Screw for Round Piling (cont.)

Two-Sided, Single-Ply Stringer — Continuous Condition (End Condition Similar)

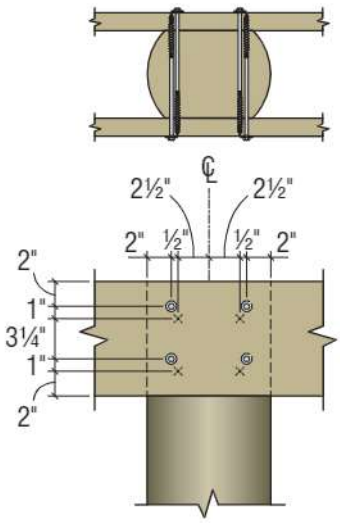

Detail RP3 — 10" Round Pile
Single 2x10

(8) 10" SDWH Timber-Hex HDG Screws

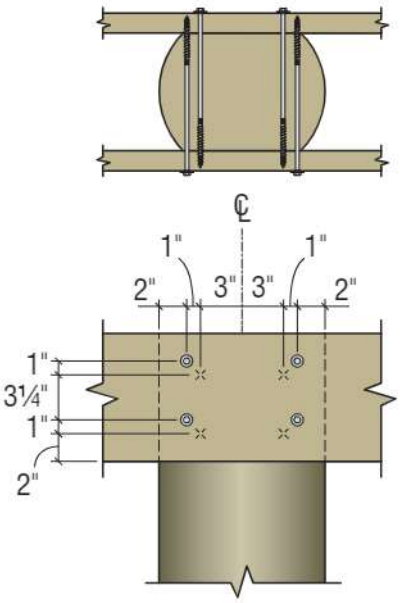

Detail RP4 — 12" Round Pile
Single 2x10

(8) 12" SDWH Timber-Hex HDG Screws

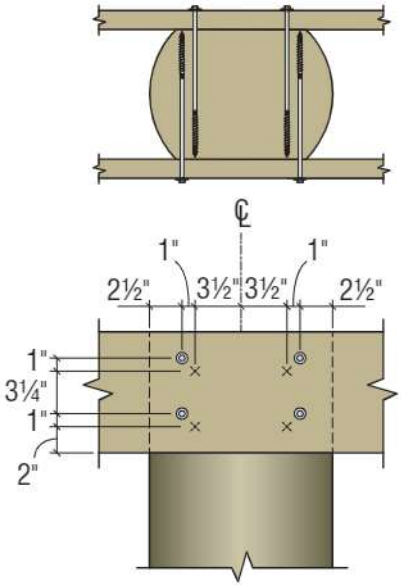

Detail RP5 — 14" Round Pile
Single 2x10

(8) 12" SDWH Timber-Hex HDG Screws

C-F-2023TECHSUP © 2023 Simpson Strong-Tie Company Inc.

Strong-Drive®
SDWH **TIMBER-HEX HDG** Screw for Round Piling (cont.)

Two-Sided, Double-Ply Stringer — Continuous Condition (End Condition Similar)

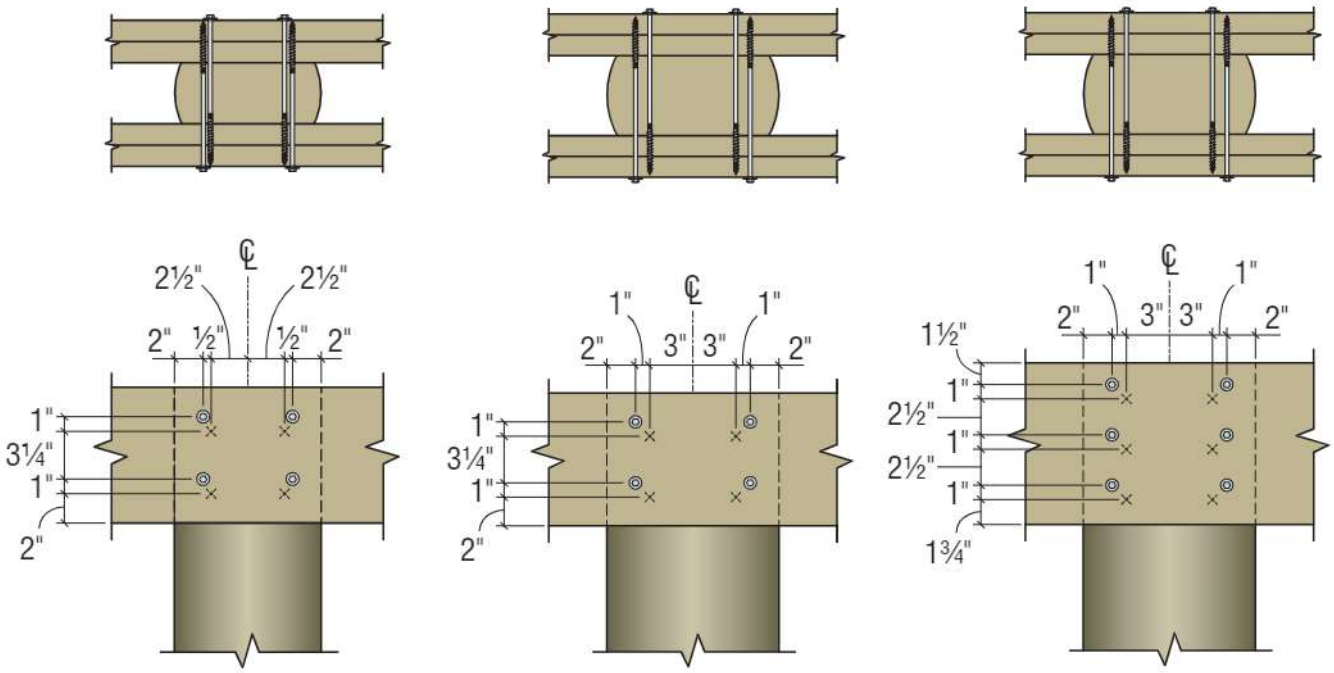

Detail RP6 — 10" Round Pile
Two-Sided, Double-Ply 2x10
(8) 10" SDWH Timber-Hex HDG Screws

Detail RP7 — 12" Round Pile
Two-Sided, Double-Ply 2x10
(8) 12" SDWH Timber-Hex HDG Screws

Detail RP8 — 12" Round Pile
Two-Sided, Double-Ply 2x12
(12) 12" SDWH Timber-Hex HDG Screws

Two-Sided, Double-Ply Stringer — Continuous Condition (End Condition Similar)

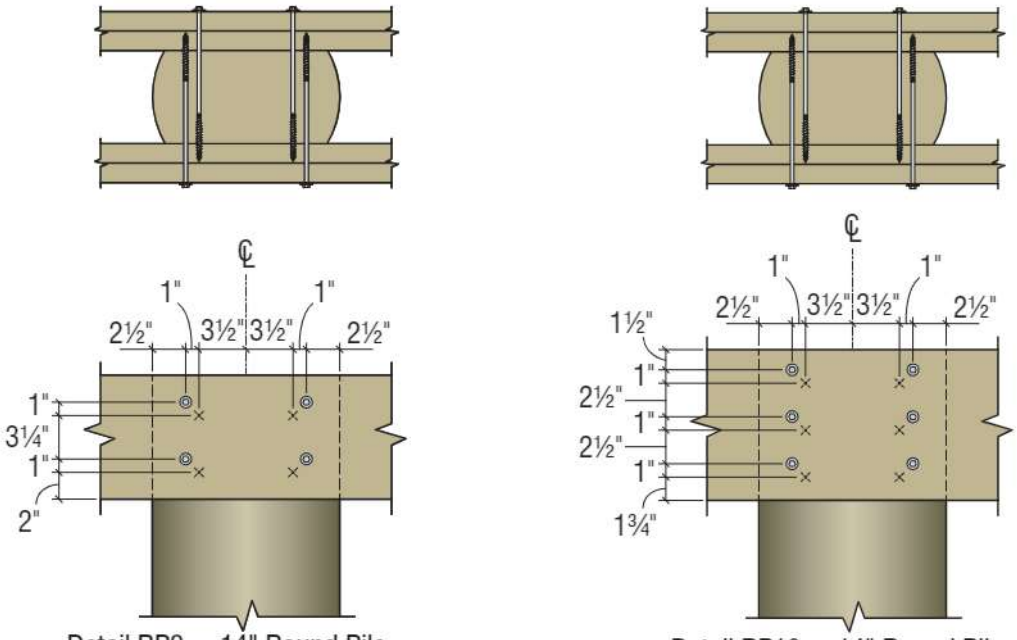

Detail RP9 — 14" Round Pile
Two-Sided, Double-Ply 2x10
(8) 12" SDWH Timber-Hex HDG Screws

Detail RP10 — 14" Round Pile
Two-Sided, Double-Ply 2x12
(12) 12" SDWH Timber-Hex HDG Screws

C-F-2023TECHSUP © 2023 Simpson Strong-Tie Company Inc.

Strong-Drive®
SDWH **TIMBER-HEX HDG** Screw for Round Piling (cont.)

End/Corner Condition

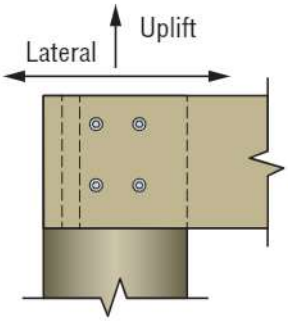

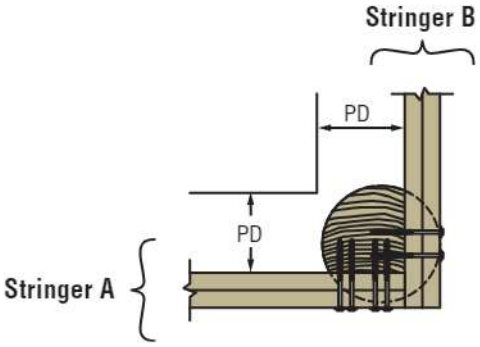

Round Pile — Loads for End/Corner Connection

Pile Size (in.)	Stringer A		Stringer B		Notched Pile ?	Detail No.	Minimum Notched Pile Depth, PD (in.)	Allowable Connection Loads per Stringers (lb.)	
	Plies — Qty. and Size (in.)	Fasteners — Qty. and Model	Plies — Qty. and Size (in.)	Fasteners — Qty. and Model				Uplift	Lateral
8	(1) 2 x 10	(4) SDWH27600G	(1) 2 x 10	(4) SDWH27600G	N	RC1	—	1,140	1,615
8	(2) 2 x 10	(4) SDWH27800G	(2) 2 x 10	(4) SDWH27800G	N	RC1	—	1,655	1,585
8	(1) 2 x 10	(4) SDWH27400G	(1) 2 x 10	(4) SDWH27400G	Y	RC2	6½	1,035	1,455
8	(2) 2 x 10	(3) SDWH27600G	(2) 2 x 10	(3) SDWH27600G	Y	RC3	5	1,310	1,110
10	(1) 2 x 10	(4) SDWH27600G	(1) 2 x 10	(4) SDWH27600G	N	RC1	—	1,140	1,615
10	(2) 2 x 10	(4) SDWH27800G	(2) 2 x 10	(4) SDWH27800G	N	RC1	—	1,655	1,585
10	(1) 2 x 10	(4) SDWH27400G	(1) 2 x 10	(4) SDWH27400G	Y	RC2	8½	1,035	1,455
10	(2) 2 x 10	(3) SDWH27600G	(2) 2 x 10	(3) SDWH27600G	Y	RC3	7	1,310	1,110
12	(1) 2 x 10	(4) SDWH27600G	(1) 2 x 10	(4) SDWH27600G	N	RC1	—	1,140	1,615
12	(2) 2 x 10	(4) SDWH27800G	(2) 2 x 10	(4) SDWH27800G	N	RC1	—	1,655	1,585
12	(1) 2 x 10	(4) SDWH27400G	(1) 2 x 10	(4) SDWH27400G	Y	RC2	10½	1,035	1,455
12	(2) 2 x 10	(3) SDWH27600G	(2) 2 x 10	(3) SDWH27600G	Y	RC3	9	1,310	1,110

1. Design of framing (stringers) and columns is by others.
2. Wooden piles and framing are Southern Pine (SP) or engineered wood products with minimum specific gravity or equivalent specific gravity of 0.55.
3. Use the screw lengths cited in the tables and details.
4. Dimensions and allowable connection loads are based on notched piles that must accommodate the stringers with adequate bearing and no gaps.
5. Notched piles shall not be notched such that more than 50% of the cross section is removed.
6. Unnotched piles may be assigned notched pile loads if the unnotched pile dimensions meet or exceed the maximum dimensions for the notched pile and fastener placement is the same.
7. Tabulated values shall be multiplied by all applicable service adjustment factors per the NDS. Allowable loads are shown with a load duration factor of C_D = 1.0. Loads may be increased for load duration per the building code up to C_D=1.6. For service moisture content greater than 19%, use C_M = 0.70.
8. When the connection on an unnotched pile is simultaneously loaded in more than one direction, the allowable load must be evaluated using the unity equation: (Design uplift/Allowable uplift) + (Design lateral/Allowable lateral) + (Design vertical/Allowable vertical) ≤ 1.0. If notched piles are used, the vertical term is zero.
9. For stringer thickness at least 1.5" and less than 3", use the table values for the conditions with a single 2x stringer.

C-F-2023TECHSUP © 2023 Simpson Strong-Tie Company Inc.

Strong-Drive®
SDWH **TIMBER-HEX HDG** Screw for Round Piles (cont.)

Two-Sided, Single and Double-Ply — Corner Condition

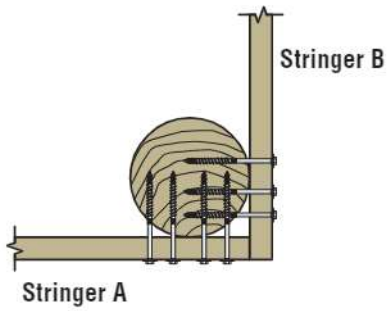

Plan

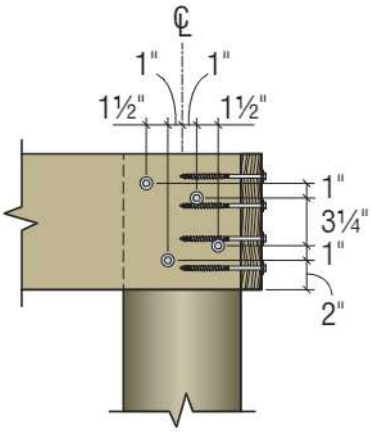

Stringer A Elevation

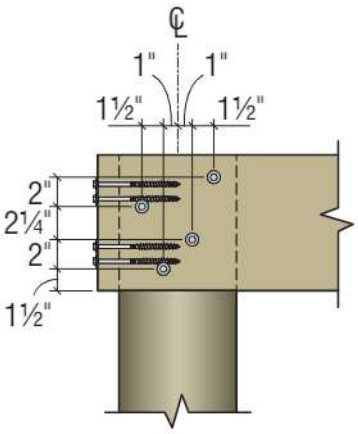

Stringer B Elevation

Detail RC1 — Unnotched Round Piles (Any Diameter, Any Qty. of Plies)

(4) SDWH Timber-Hex HDG Screws, Length per Table

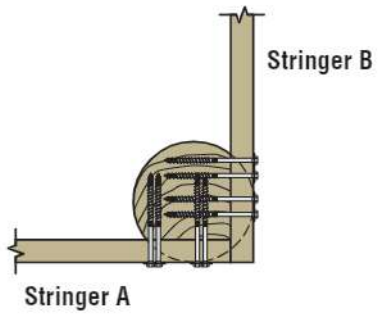

Plan

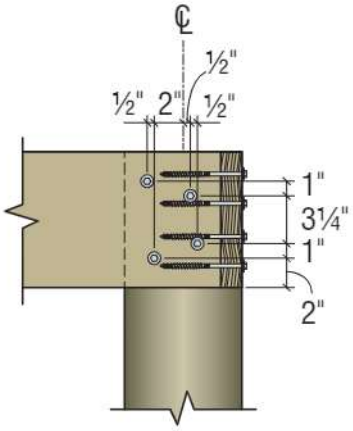

Stringer A Elevation

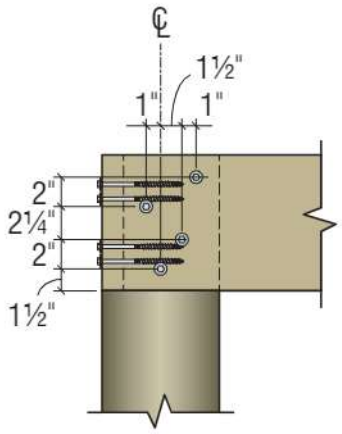

Stringer B Elevation

Detail RC2 — Notched Round Piles (Any Diameter), Single-Ply Stringer

(4) 4" SDWH Timber-Hex HDG Screws

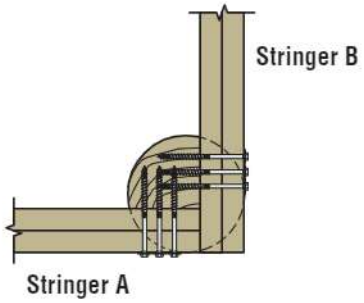

Plan

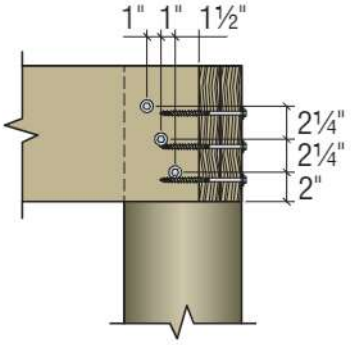

Stringer A Elevation

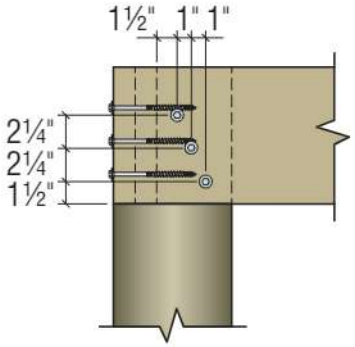

Stringer B Elevation

Detail RC3 — Notched Round Piles (Any Diameter), Double-Ply Stringer

(3) 6" SDWH Timber-Hex HDG Screws

C-F-2023TECHSUP © 2023 Simpson Strong-Tie Company Inc.

Strong-Drive®
SDWH **TIMBER-HEX HDG** Screw for Round Piling

Stringer-to-Round Pile Bracing

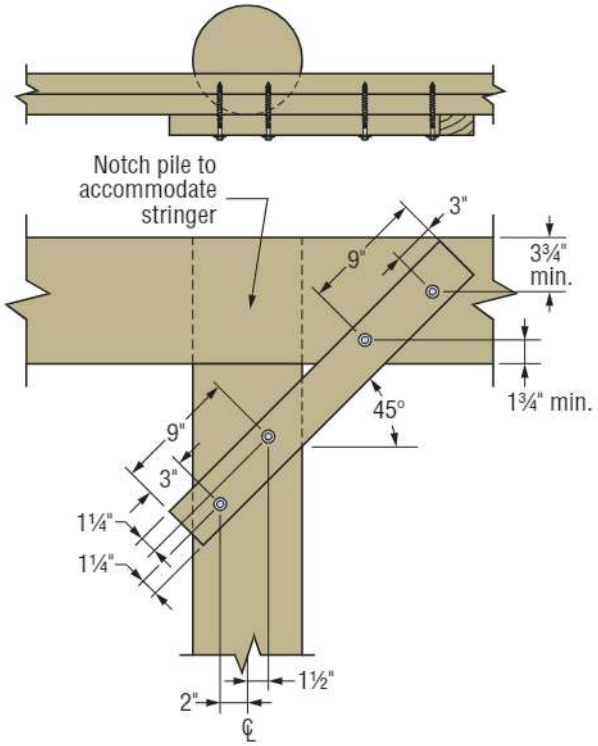

Detail RB1

2x4 Brace with
(2) 4" SDWH Timber-Hex
HDG Screws at Each End

Round Piles — Loads for Stringer-to-Pile Bracing Connections

Screw Model	Brace Size (in.)	Brace Type	Number of Screws per End of Brace	Detail No.	Allowable Load in Tension or Compression (lb.)
SDWH27400G	2x4	DF or SP	2	RB1	750

1. Design of framing (stringers) and columns is by others.
2. Wooden piles and framing are Southern Pine (SP) or engineered wood products with minimum specific gravity or equivalent specific gravity of 0.50.
3. Use the screw lengths cited in the tables.
4. Tabulated values shall be multiplied by all applicable service adjustment factors per the NDS. Allowable loads are shown with a load duration factor of C_D=1.0. Loads may be increased for load duration per the building code up to C_D=1.6. For service moisture content greater than 19%, use C_M=0.70.
5. Minimum stringer thickness shall be 2.5" to accommodate screw length.
6. See figure for spacing requirements.

C-F-2023TECHSUP © 2023 Simpson Strong-Tie Company Inc.

Strong-Drive® SD CONNECTOR Screw
Connections
built to last.

SIMPSON Strong-Tie

Metal-to-Wood and Connector Fastening

Connector Fastening
Fastener Types for Connectors 200

Connector/Steel-to-Wood Fastening
Strong-Drive® SDS HEAVY-DUTY CONNECTOR Screw 202
Strong-Drive® SD CONNECTOR and
SD CONNECTOR SS Screw 203
Strong-Drive® SCN SMOOTH-SHANK CONNECTOR Nail . .206
Strong-Drive® SCNR RING-SHANK CONNECTOR Nail. 207
OUTDOOR ACCENTS® Structural Wood Screw. 208
OUTDOOR ACCENTS® Connector Screw 209

Connector Fastening

In some cases, it is desirable to install Simpson Strong-Tie face-mount joist hangers and straight straps with nails that are a different type or size than what is called out in the load table. In these cases, these reduction factors must be applied to the allowable loads listed for the connector.

Load Adjustment Factors for Optional Fasteners Used with Face-Mount Hangers, Post Bases and Caps, and Straight Straps — Includes SD Connector (SD) and SD Connector SS (SD SS) Fastener Options

Connector Table Fastener	Replacement Fastener	Allowable Load Adjustment Factor				
		Face-Mount Hangers			Post Bases and Caps	Straight Straps
		Straight Download/ Uplift	Double Shear			
			Uplift	Download		
0.131" x 1½"	#9 x 1½" SD or SD SS screw	1.00	N/A	N/A	N/A	1.00
0.131" x 2½"	0.131" x 1½"	0.85	N/A	N/A	N/A	1.00
	#9 x 1½" SD or SD SS screw	1.00	N/A	N/A	N/A	1.00
0.148" x 1½"	#9 x 1½" SD or SD SS screw	1.00	N/A	N/A	N/A	1.00
	0.131" x 1½"	0.83	N/A	N/A	N/A	0.83
0.148" x 2½" 0.148" x 3" 0.148" x 3¼"	0.131" x 1½"	0.71	0.65[10]	0.71[10]	N/A	0.83
	0.131" x 2½"	0.83	0.65	0.83	0.83	0.83
	0.148" x 1¼"	0.64	Not allowed	Not allowed	N/A	1.00[9]
	0.148" x 1½"	0.77	0.77[10]	0.77[10]	N/A	1.00[9]
	0.148" x 2½"	1.00	0.80	1.00	1.00	1.00
	0.148" x 3¼"	1.00	1.00	1.00	1.00	1.00
	#9 x 1½" SD or SD SS screw	1.00	See **strongtie.com**[4]		N/A	1.00
	#9 x 2½" SD or SD SS screw	1.00	See **strongtie.com**[4]		1.00	1.00
#9 x 2½" SD Connector screw	#9 x 1½" SD or SD SS screw	0.86	0.86[10]	0.86[10]	N/A	0.86
#10 x 1½" SD Connector screw	#9 x 1½" SD or SD SS screw	0.83	N/A	N/A	0.83	0.83
#10 x 2½" SD Connector screw	#9 x 1½" SD or SD SS screw	0.71	0.71[10]	0.71[10]	N/A	0.71
	#9 x 2½" SD or SD SS screw	0.83	0.83	0.83	0.83	0.71
	#10 x 1½" SD or SD SS screw	0.80	0.80[10]	0.80[10]	N/A	0.80
0.162" x 2½" 0.162" x 3½"	0.162" x 2½"	1.00	0.67	1.00	1.00	1.00
	0.148" x 2½"	0.84	0.67	0.84	0.84	0.84
	0.148" x 3"	0.84	0.84	0.84	0.84	0.84
	0.148" x 3¼"	0.84	0.84	0.84	0.84	0.84
	0.148" x 1½"	0.64	0.64[10]	0.64[10]	Not allowed	0.84[8]
	#9 x 1½" SD or SD SS screw	0.83	See **strongtie.com**[4]		N/A	0.83
	#9 x 2½" SD or SD SS screw	0.83	See **strongtie.com**[4]		0.83	0.83
	#10 x 1½" SD screw	1.00	See **strongtie.com**[4]		N/A	1.00
	#10 x 2½" SD screw	1.00	See **strongtie.com**[4]		1.00	1.00

For LUS, MUS, HUS, LRU, HHUS and HGUS Hangers

Double-shear nailing shall use minimum 3"-long nails or 2½"-long SD screws

Shorter fasteners may not be used as double-shear nails

1. Allowable load adjustment factors shown in the table are applicable to all face-mount hangers, post bases and caps, and straight straps throughout this catalog, except as noted in the footnotes below.
2. Some products have been tested specifically with alternative fasteners and have allowable load adjustment factors or reduced capacities published on the specific product page or **strongtie.com**. Values published on the product page or **strongtie.com** may be used in lieu of using this table.
3. This table does not apply to SUR/SUL/HSUR/HSUL hangers or to hangers modified per allowed options, or to connectors made from steel thicker than 10 ga.
4. Strong-Drive® SD Connector and SD Connector SS screw substitutions in this table do not apply to sloped, skewed, or double-shear hangers. Strong-Drive SD Connector and SD Connector SS screws may be used in these connectors. For additional information and specific allowable loads, refer to **strongtie.com/sd**. Where published allowable loads are for installation with #10 SD screws, multiply by 0.83 to obtain allowable loads for #9 SD screws.
5. Nails and Strong-Drive SD Connector and SD Connector SS screws may not be combined in a connection.
6. Do not substitute 0.148" x 1½" nails for face nails in slope and skew combinations or in skewed-only LSU.
7. For straps installed over ⅝" maximum wood structural panel sheathing, use a 2½"-long fastener minimum.
8. Where noted, use 0.84 for 10 ga., 11 ga., and 12 ga. products when using SPF lumber.
9. Where noted, use 0.92 for 10 ga., 11 ga., and 12 ga. products when using SPF lumber.
10. Where noted, 1½"-long fasteners may be substituted for the specified fastener into the header only; double-shear fasteners shall be minimum 2½" long.

C-F-2023TECHSUP © 2023 Simpson Strong-Tie Company Inc.

Fastening Identification

Round Holes

Purpose:
To fasten a connector.

Fill Requirements:
Always fill, unless noted otherwise.

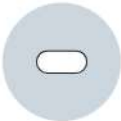

Obround Holes

Purpose:
To make fastening a connector in a tight location easier.

Fill Requirements:
Always fill, unless noted otherwise.

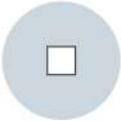

Square Holes

Purpose:
To fasten a connector.

Fill Requirements:
Always fill, unless noted otherwise.

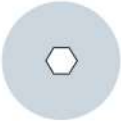

Hexagonal Holes

Purpose:
To fasten a connector to concrete or masonry.

Fill Requirements:
Always fill when fastening a connector to concrete or masonry.

Triangular Holes

Purpose:
To increase a connector's strength or to achieve maximum strength.

Fill Requirements:
When the designer specifies maximum nailing.

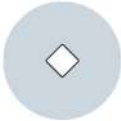

Diamond Holes

Purpose:
To temporarily fasten a connector to make installing it easier.

Fill Requirements:
None.

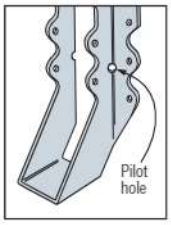

Pilot Holes

Tooling holes for manufacturing purposes. No fasteners required.

Speed Prongs

Used to temporarily position and secure the connector for easier and faster installation.

Positive Angle Nailing (PAN)

Provided when wood splitting may occur, and to speed installation.

Dome Nailing

This feature guides the nail into the joist and header at a 45° angle.

Double-Shear Nailing

The nail is installed into the joist and header, distributing the load through two points on each joist nail for greater strength. Double-shear nailing must be full-length catalog nail.

ITS/IUS Strong-Grip™

The Strong-Grip™ seat allows the I-joist to "snap" in securely without the need for joist nails.

C-F-2023TECHSUP © 2023 Simpson Strong-Tie Company Inc.

Strong-Drive® SDS HEAVY-DUTY CONNECTOR Screw

Heavy-Duty Simpson Strong-Tie Connectors

The Simpson Strong-Tie Strong-Drive SDS screw is a ¼"-diameter high-strength structural wood screw ideal for various connector installations as well as wood-to-wood, general metal-to-wood and EWP fastening applications.

Install Tips: A low-speed ½" drill with a ⅜" hex driver (BITHEXR38-134) is the recommended tool for installation.

Codes/Standards: ICC-ES ESR-2236 (including City of LA Supplement); State of Florida FL9589

For more information, see p. 68, C-F-2023 *Fastening Systems* catalog

SDS — Allowable Shear Loads — Steel Side-Plate Applications

Length (in.)	Model No.	Thread Length (in.)	Fasteners per Carton	DF/SP Allowable Loads[3]							SPF/HF Allowable Loads[3]						
				Shear (100)					Withdrawal[4] (100)		Shear (100)					Withdrawal[4] (100)	
				Wood Side Plate[2]		Steel Side Plate					Wood Side Plate[2]		Steel Side Plate				
				1½"	1¾" SCL	16 ga.	14 ga. and 12 ga.	10 ga. or Greater	Wood Side Plate	Steel Side Plate	1½"	1¾" SPF LVL	16 ga.	14 ga. and 12 ga.	10 ga. or Greater	Wood Side Plate	Steel Side Plate
1½	SDS25112	1	1,500	—	—	250	250	250	170	170	—	—	180	180	180	120	120
2	SDS25200	1¼	1,300	—	—	250	290	290	215	215	—	—	180	210	210	150	150
2½	SDS25212	1½	1,100	190	—	250	390	420	255	255	135	—	180	280	300	180	180
3	SDS25300	2	950	280	—	250	420	420	345	345	200	—	180	300	300	240	240
3½	SDS25312	2¼	900	340	340	250	420	420	345	385	245	245	180	300	300	240	270
4½	SDS25412	2¾	800	350	340	250	420	420	345	475	250	245	180	300	300	240	330
5	SDS25500	2¾	500	350	340	250	420	420	345	475	250	245	180	300	300	240	330
6	SDS25600	3¼	600	350	340	250	420	420	345	560	250	245	180	300	300	240	395
8	SDS25800	3¼	400	350	340	250	420	420	345	560	250	245	180	300	300	240	395

1. Allowable loads are shown at the wood load duration factor of C_D = 1.00. Loads may be increased for load duration up to a C_D = 1.60.
2. Withdrawal loads shown are in pounds (lb.) and are based on the lessor value of either head pull-through for a 1.5"-thick wood side member or withdrawal from the main member. If entire thread length is not installed into the main member, calculate withdrawal based on 172 lb./in. of thread penetration for DF/SP wood and 121 lb./in. for SPF/HF wood. Maximum withdrawal values with a steel side plate are 635 lb. for 16 ga. and 800 lb. for 14 ga. due to head pull-through.
3. LSL wood-to-wood applications that require 4½", 5", 6" and 8" SDS screws are limited to interior-dry use only.
4. Minimum spacing requirements are listed in ICC-ES ESR-2236.

Wafer-Head Screw

General Wood-to-Wood, Metal-to-Wood Fastening

For more information, see p. 68, C-F-2023 *Fastening Systems* catalog

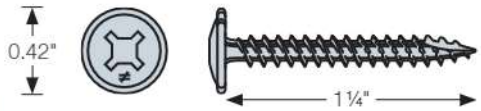

SD8 — Allowable Shear Loads — Steel Side Plate

Size. x Length (in.)	Model No.	Reference Allowable Shear Loads (lb.) Steel Side Plate Thickness in. (ga.) 0.054 – 0.25 (16 – 3)		Reference Allowable Withdrawal Loads (lb.)	
		DFL/SP	SPF/HF	DFL/SP	SPF/HF
#8 x 1¼	SD8x1.25	50	45	82	58

1. Allowable loads are shown at the wood load duration factor of C_D = 1.00. Loads may be increased for load duration up to a C_D = 1.60.
2. SD8x1.25 requires ¾" minimum penetration into the main member.
3. Do not use SD8x1.25 wood screws with structural connectors unless specified.
4. **Warning:** Industry studies show that hardened fasteners can experience performance problems in wet or corrosive environments. Accordingly, use this product in dry, interior, and noncorrosive environments only.

C-F-2023TECHSUP © 2023 Simpson Strong-Tie Company Inc.

Strong-Drive®
SD CONNECTOR and SD CONNECTOR SS Screw

Codes/Standards: ICC-ES ESR-3046 (including City of LA Supplement); State of Florida FL 9589

For more information, see pp. 69–70, C-F-2023 *Fastening Systems* catalog

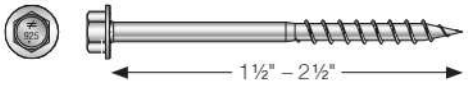

SD/SD SS — Allowable Shear Loads — Steel/Stainless Steel Side Plate

Size x Length (in.)	Model No.	Thread Length (in.)	Reference SPF/HF Allowable Shear Loads (lb.)	
			DFL/SP	SPF/HF
#9 x 1½	SD9112SS / SD9112	1.0	171	112
#9 x 2½	SD9212SS / SD9212		200	112
#10 x 1½	SD10112		173	138
#10 x 2½	SD10212		215	165

1. Loads are given for C_D = 1.00 and may be increased for load duration per the building code to C_D = 1.60.
2. Steel/stainless steel side-plate thickness is 33 to 100 mil (20–12 ga.).

SD/SD SS — Allowable Shear Loads for Wood Connections

Size x Length (in.)	Model No.	Thread Length (in.)	Reference DFL/SP Allowable Shear Loads (lb.)			Reference SPF/HF Allowable Shear Loads (lb.)		
			Wood Side Plate Thickness (in.)			Wood Side Plate Thickness (in.)		
			15/32 – ½	23/32 – ¾	1½	15/32 – ½	21/32 – ¾	1½
#9 x 1½	SD9112 / SD9112SS	1.0	105	—	—	93	—	—
#9 x 2½	SD9212 / SD9212SS		118	133	130	99	94	109
#10 x 1½	SD10112		127	—	—	102	—	—
#10 x 2½	SD10212		147	168	152	106	126	123

SD/SD SS — Allowable Withdrawal Loads — DFL, SP, SPF, HF Lumber

Size x Length (in.)	Model No.	Thread Length (in.)	Head Diameter (in.)	Reference Withdrawal Design Value, W (lb. / in.)	
				DFL and SP Main Member	SPF and HF Main Member
#9 x 1½	SD9112 / SD9112SS	1.0	0.37	173	122
#9 x 2½	SD9212 / SD9212SS				
#10 x 1½	SD10112			173	122
#10 x 2½	SD10212				

C-F-2023TECHSUP © 2023 Simpson Strong-Tie Company Inc.

Strong-Drive® SD **CONNECTOR SS** Screw Connector Compatibility Chart

The load-rated Strong-Drive SD Connector SS screw (SD SS) is a Type 316 stainless steel fastener designed, tested and approved for use with certain Simpson Strong-Tie stainless steel connectors. Type 316 stainless steel provides excellent protection in severe-corrosion environments.

- Shank is designed to match fastener holes in Simpson Strong-Tie connectors
- Head stamp with size for easy identification
- Packages include a ¼" hex driver bit
- Available in #9 x 1½", #9 x 2½"

Simpson Strong-Tie Stainless-Steel Connectors for SD Connector SS Screws

The following tables list stainless steel Simpson Strong-Tie Connector models, the approved Type 316 stainless steel Strong-Drive SD Connector SS screw sizes, and the quantity required. Simpson Strong-Tie is constantly testing and updating this information. See **strongtie.com/ssconnectorfastening** for updated information.

C-F-2023TECHSUP © 2023 Simpson Strong-Tie Company Inc.

Strong-Drive® SD **CONNECTOR SS** Screw Connector Compatibility Chart (cont.)

Connector Model No.	Description	SD Connector SS Quantity Needed	
		#9 x 1½"[1] (SD9112SS)	#9 x 2½" (SD9212SS)
LUC26SS	For 2x6, 2x8 joist	10	—
LUC210SS	For 2x10, 2x12 joist	16	—
LUS26SS	For 2x6, 2x8 joist	4	4
LUS28SS	For 2x8, 2x10 joist	6	4
LUS210SS	For 2x10, 2x12, 2x14 joist	8	4
LUS26-2SS	For Double 2x6, 2x8 joist	4	4
LUS28-2SS	For Double 2x8, 2x10 joist	6	4
LUS210-2SS	For Double 2x10, 2x12 joist	8	6
HUC28-2SS[1]	For Double 2x8	—	20
HUC210-2SS[1]	For Double 2x10	—	28
SUL26SS[1]	Skewed 45° left for 2x6, 2x8 joist	6	6
SUR26SS[1]	Skewed 45° right for 2x6, 2x8 joist	6	6
SUL210SS[1]	Skewed 45° left for 2x10, 2x12 joist	10	10
SUR210SS[1]	Skewed 45° right for 2x10, 2x12 joist	10	10
LCE4SS[1]	For 4x or 6x post	24	—
AC4SS[1]	For 4x beam, 4x post	28	—
AC6SS[1]	For 6x beam, 6x post	28	—
BC4SS[1]	For 4x beam, 4x post	—	12
BC6SS[1]	For 6x beam, 6x post	—	24
BCS2-2/4SS	For Double 2x beam to 4x post	—	14
BCS2-3/6SS[1]	For Triple 2x beam to 6x post	—	18
BC40SS[1]	For 4x beam	10	—

Connector Model No.	Description	SD Connector SS Quantity Needed	
		#9 x 1½"[1] (SD9112SS)	#9 x 2½" (SD9212SS)
ABU44SS[1]	For 4x4 post	12	—
ABU46SS[1]	For 4x6 post	12	—
ABU66SS[1]	For 6x6 post	12	—
ABU88SS[1]	For 8x8 post	18	—
H2ASS	For rafter/truss-to-wall stud	10	—
H2.5ASS	For rafter/truss-to-wall plate	10	—
H3SS	For single plate	8	—
H8SS	For rafter/truss-to-wall plate	10	—
H10ASS	For rafter/truss-to-wall plate	18	—
A34SS	Multi-purpose angle	8	—
A35SS	Multi-purpose angle	12	—
L50SS	Skewable angle	6	—
LTS12SS[2]	Light twist strap	12	—
LTS18SS[2]	Light twist strap	12	—
MTS12SS[2]	Light twist strap	14	—
MTS20SS[2]	Light twist strap	14	—
CS16SS	Coil strap	22	—
MSTA12SS	Straight strap	10	—
MSTA18SS	Straight strap	14	—
MSTA24SS	Straight strap	18	—
MSTA36SS	Straight strap	26	—
LSCSS	Stair stringer	17	—

1. Products with superscript 1 have published allowable loads based on installation with #10 SD screws. Multiply allowable loads by 0.83 to obtain allowable loads for #9 SD SS screws.
2. LTS/MTS straps installed with #9 x 1½" SD SS screws match allowable loads for installations with 0.148" x 3" nails.

C-F-2023TECHSUP © 2023 Simpson Strong-Tie Company Inc.

Strong-Drive®
SCN SMOOTH-SHANK CONNECTOR Nail

Simpson Strong-Tie® Connectors

For more information, see pp. 132 and 148, C-F-2023 *Fastening Systems* catalog

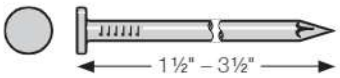

SCN Smooth-Shank Head Stamps

Simpson Strong-Tie connectors have been designed and tested with specific types of nails, which are generally referred to as Structural Connector Nails (SCN). The specified nail size, type and quantity must be installed in the correct holes of the connector or strap to achieve the published loads for the hardware. The dimensions and bending yield strength characteristics needed for nails used in Simpson Strong-Tie connectors and hardware are given in the table below. The designer and installer must be sure that the correct fastener is specified and installed. In cases where the installed nail matches the criteria of the nail specified for the hardware, full hardware design values result.

SCN Smooth-Shank Connector Nails and Common Nails Approved for Use with Simpson Strong-Tie Connectors[1,2,3]

Length (in.)	Fastener	Head Style	Head Diameter (in.)	Minimum Bending Yield Strength (psi)[4,6]
0.131 x 1½	N8	Round	0.281	100,000
0.131 x 2½	8d common	Round	0.281	100,000
0.148 x 1½	N10	Round	0.281	90,000
0.148 x 2½	N10D	Round	0.281	90,000
0.148 x 3	10d common	Round	0.281[5]	90,000
0.162 x 2½	N16	Round	0.281	90,000
0.162 x 3½	16d common	Round	0.281[5]	90,000

1. Tolerance on diameter and length per ASTM F1667.
2. Tolerance on head diameter (±0.0015 in.)
3. All dimensions are prior to coating.
4. Tested in accordance with ASTM F1575.
5. Minimum head diameter shown; actual head diameters on 10d and 16d common nails are larger.
6. Minimum bending yield strengths applicable to SCNR nails of the same diameter.

Power-driven SCNs are often used to install Simpson Strong-Tie connectors and straps. Power-driven nails must have the same dimensions and bending yield strength as hand-driven nails. Dedicated power nailers are designed to drive nails of specific lengths that may be less than the length required to achieve full design values for the connector or strap hardware. When connectors and straps are installed with power-driven nails or hand-driven nails that are a different type or size than those called out in the connector and strap specifications, adjustment factors as given on **strongtie.com** must be applied to the allowable loads for the connector or strap.

Overdriven Nails in Connectors and Straps

A nail that is installed such that the head deforms the steel of the connector or strap is considered overdriven. Extra care to prevent overdriven nails should be taken when installing power-driven nails. Simpson Strong-Tie has evaluated the effect of overdriven nails in connectors and straps. No load reductions for connectors or straps apply as a result of overdriven nails if all of the following conditions are met:

- Connectors and straps are 14-, 16-, or 18-gauge steel.
- The top of the nail head is not driven past flush with the face of the metal hardware.
- The nail goes through an existing fastener hole without enlarging it.
- The steel around the hole is not torn or damaged other than denting caused by the nail head.

C-F-2023TECHSUP © 2023 Simpson Strong-Tie Company Inc.

Strong-Drive®
SCNR RING-SHANK CONNECTOR Nail

Simpson Strong-Tie Connectors

Strong Drive® SCNR Ring-Shank Connector nails are the best choice for achieving maximum load values in stainless-steel connectors.

For more information, see pp. 133 and 149, C-F-2023 *Fastening Systems* catalog

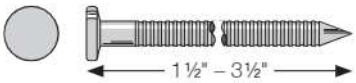

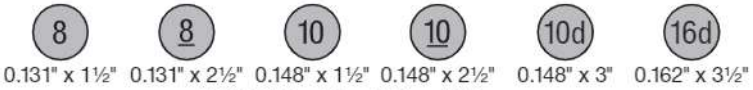

SCNR Ring-Shank Head Stamps

When installing galvanized connectors and straps, use an SCN that is zinc galvanized. If the connectors and straps are stainless steel, then stainless-steel SCNRs shall be used.

Stainless-Steel Nails

The USDA Forest Service, Forest Products Laboratory showed that stainless-steel nails with smooth shanks do not have the same withdrawal resistance as smooth-shank carbon steel nails (Withdrawal strength and bending yield strength of stainless-steel nails, 2015, *Journal of Structural Engineering*). In addition, Simpson Strong-Tie conducted an extensive series of withdrawal testing with stainless-steel nails made from Type 304, Type 305 and Type 316 stainless steels to assess the stainless-steel ring-shank nail withdrawal performance over a wide range of nail diameters (0.072 in. to 0.238 in.) and wood specific gravities (0.42 to 0.55). The withdrawal tests were conducted in accordance with ASTM D1761 using wood conditioned to 12-percent moisture content. Further, the reference allowable withdrawal resistance for each of the tested nails was calculated using the withdrawal calculation for post-frame ring-shank nails in NDS-12, equation 11.2-4 (NDS-15, equation 12.2-4), NDS-2015, equation 12.2-4 and NDS-2018, equation 12.4-5,

$$W = 1800\,G^2\,D$$

The allowable withdrawal loads for Simpson Strong-Tie stainless-steel ring-shank nails with a safety factor of 5.0 were at or above the calculated reference withdrawal resistance for deformed-shank nails. As a result, the deformed-shank nails equation for reference withdrawal design values can be safely used for Simpson Strong-Tie stainless-steel ring-shank nails of all diameters across the specific gravity range of 0.42 to 0.55. This finding and recommendation are specific to Simpson Strong-Tie stainless-steel ring-shank nails and shall not be applied to stainless-steel ring-shank nails made by other manufacturers.

The bending yield strength of Simpson Strong-Tie stainless-steel nails (smooth and ring-shank) meet the bending yield strength specifications of ASTM F1667, which are the same as those in the IBC and IRC.

Stainless Steel Nails for Connectors

Simpson Strong-Tie stainless-steel connectors are required to be installed using stainless-steel fasteners. Recent testing at Simpson Strong-Tie indicates that allowable load values for some Simpson Strong-Tie stainless-steel connectors have changed when smooth-shank stainless steel nails are used. Refer to **strongtie.com/products/categories/zmax.html** for a list of connectors available in stainless steel, which includes links to load tables for carbon steel and stainless-steel smooth-shank nail installations as applicable.

In cases where these load tables indicate stainless-steel smooth-shank nail installations have reduced loads, full allowable loads listed for the same carbon steel connector may be achieved if the stainless-steel connector is installed with the correct replacement stainless-steel Simpson Strong-Tie Strong Drive SCNR Ring-Shank Connector nails as shown in the following Nail Substitution Chart.

Nail Substitution Chart
Replacement Ring-Shank Stainless-Steel Nails, Type 316 Stainless Steel

Catalog-Specified Carbon-Steel Smooth-Shank Nail	Replacement Stainless-Steel Strong-Drive SCNR Ring-Shank Connector Nail	
Length (in.)	Hand-Drive	Collated
0.131 x 1.5	SSNA8	T10A150MCN
0.131 x 2.5	SSA8D	T10A250MCN
0.148 x 1.5	SSNA10	T9A150MCN
0.148 x 2.5	—	T9A250MCN
0.148 x 3.0	SSA10D	—
0.162 x 3.5	SSA16D	—

1. Collated nails listed are available in 33° paper tape strips.

C-F-2023TECHSUP © 2023 Simpson Strong-Tie Company Inc.

Outdoor Accents® Structural Wood Screw

(Strong-Drive® SDWS TIMBER Screw)
Structural Wood-to-Wood Connections for Outdoor Accents Decorative Hardware

Designed to provide an easier and significantly faster installation time compared to through-bolting. When used with the patented hex-head washer (which is code report listed in IAPMO UES ER-192), it provides a structural, decorative solution for Outdoor Accent products.

Black exterior coatings provide corrosion resistance equivalent to hot-dip galvanization (ASTM A153, Class D), making them suitable for certain exterior and preservative-treated wood applications.

SDWS22312DBB with STN22 Hex-Head Washer

Patented, see **strongtie.com/patents** for the most current list.

Features:

- New patented SawTooth® point on the 3½" and 5½" lengths ensures fast starts, reduces installation torque and eliminates the need for predrilling in most applications
- Deep 6-lobe T40 recess for secure and easy driving
- Underhead nibs offer greater control when seating the head

Codes/Standards: IAPMO UES ER-192 (including City of LA Supplement), State of Florida FL13975

US Patent: 9,523,383

For more information, see pp. 64–66, C-F-2023 *Fastening Systems* catalog

The SDWS22312DBB, SDWS22512DBB and the SDWS25200DBB can be used in conjunction with the STN22 hex-head washer. When installing SDWS22312DBB and SDWS22512DBB, the STN22 can be placed onto wood or steel side plate, and SDWS25200DB can be placed onto steel side plate member prior to screw installation.

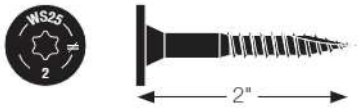

SDWS Outdoor Accents Structural Wood Screw with STN22 Hex-Head Washer — Wood to Wood/Steel

Model No.	Thread Length (in.)	Reference Allowable Shear Loads (lb.)					
		2x Wood Side Member			12-ga. Steel Side Member		
		DFL/SP	SPF/HF	Western Cedar	DFL/SP	SPF/HF	Western Cedar
SDWS22312DBB with STN22	2	235	192	179	470	385	320
SDWS22512DBB with STN22	3	465	430	395	640	495	425
SDWS25200DBB with STN22	1¼	—	—	—	210	170	—

See footnotes below.

SDWS Outdoor Accents Structural Wood Screw — Wood to Wood

Model No.	Thread Length (in.)	Reference Allowable Shear Loads (lb.)			Reference Allowable Withdrawal Loads (lb./in.)		
		2x Wood Side Member					
		DFL/SP	SPF/HF	Western Cedar	DFL/SP	SPF/HF	Western Cedar
SDWS22312DBB	2	255	190	225	164	151	142
SDWS22512DBB	3	405	405	230	214	187	142
SDWS25200DBB	1¼	—	—	—	172	103	—

1. Allowable loads are for connections between two members with full thread penetration into the main member.
2. Allowable loads are shown at the wood load duration factor of C_D = 1.0. Loads may be increased for load duration per the building code up to a C_D = 1.60. Tabulated values must be multiplied by all applicable adjustment factors per the NDS.
3. Minimum spacing, edge and end distance requirements are per IAPMO UES ER-192.
4. Loads are based on installation into the side grain of the wood with the screw axis perpendicular to the face of the member.
5. "—" indicates conditions not tested.

C-F-2023TECHSUP © 2023 Simpson Strong-Tie Company Inc.

Outdoor Accents®
Connector Screw

(Strong-Drive® SD CONNECTOR Screw)
Structural Wood-to-Wood Connections for Outdoor Accents Decorative Hardware

The Outdoor Accents Connector Screw reduces installation time by driving easily without predrilling. Designed for installation with the Outdoor Accents APA21 90°-angle, APLH light joist hangers, APRT Rigid Tie® connectors and APGT gazebo ties, the screw's black finish accents any outdoor living project.

Double-barrier black coating provides corrosion resistance equivalent to hot-dip galvanization (ASTM A153, Class D), making it suitable for certain exterior and preservative-treated wood applications.

Features:

- Tested and approved for use in many of our best-selling connectors for both interior and most exterior applications
- The single-fastener steel-side-plate load capacity of the SD10 exceeds the capacity of a 16d common nail
- Optimized heat-treating for ductility and strength
- ¼" hex drive bit included
- Head identification for easy inspection

Codes/Standards: ICC-ES ESR-3046 (including City of LA Supplement); State of Florida FL 9589

For more information, see p. 67, C-F-2023 *Fastening Systems* catalog

For more information on Outdoor Accents connector products, please see the *Wood Construction Connectors* catalog, C-C-2021.

Outdoor Accents Connector Screw

Size x Length (in.)	Model No.	Thread Length (in.)	Reference DFL/SP Allowable Loads		Reference SPF/HF Allowable Loads	
			Shear Steel Side Plate 20 ga. – 12 ga. (lb.)	Withdrawal (lb./in.)	Shear Steel Side Plate 20 ga. – 12 ga. (lb.)	Withdrawal (lb./in.)
#10 x 1½	SD10112DBB	1	173	173	138	122

1. Withdrawal loads and steel-side-plate shear loads are based on testing per AC233.
2. Allowable loads are shown at the wood load duration factor of $C_D = 1.00$.
   Loads may be increased for load duration per the building code up to a $C_D = 1.60$.
3. Withdrawal loads are in lb./in. of thread penetration into the side grain of the main member.
4. Visit **strongtie.com** for wood-to-wood shear values and wood-side-plate details.

C-F-2023TECHSUP © 2023 Simpson Strong-Tie Company Inc.

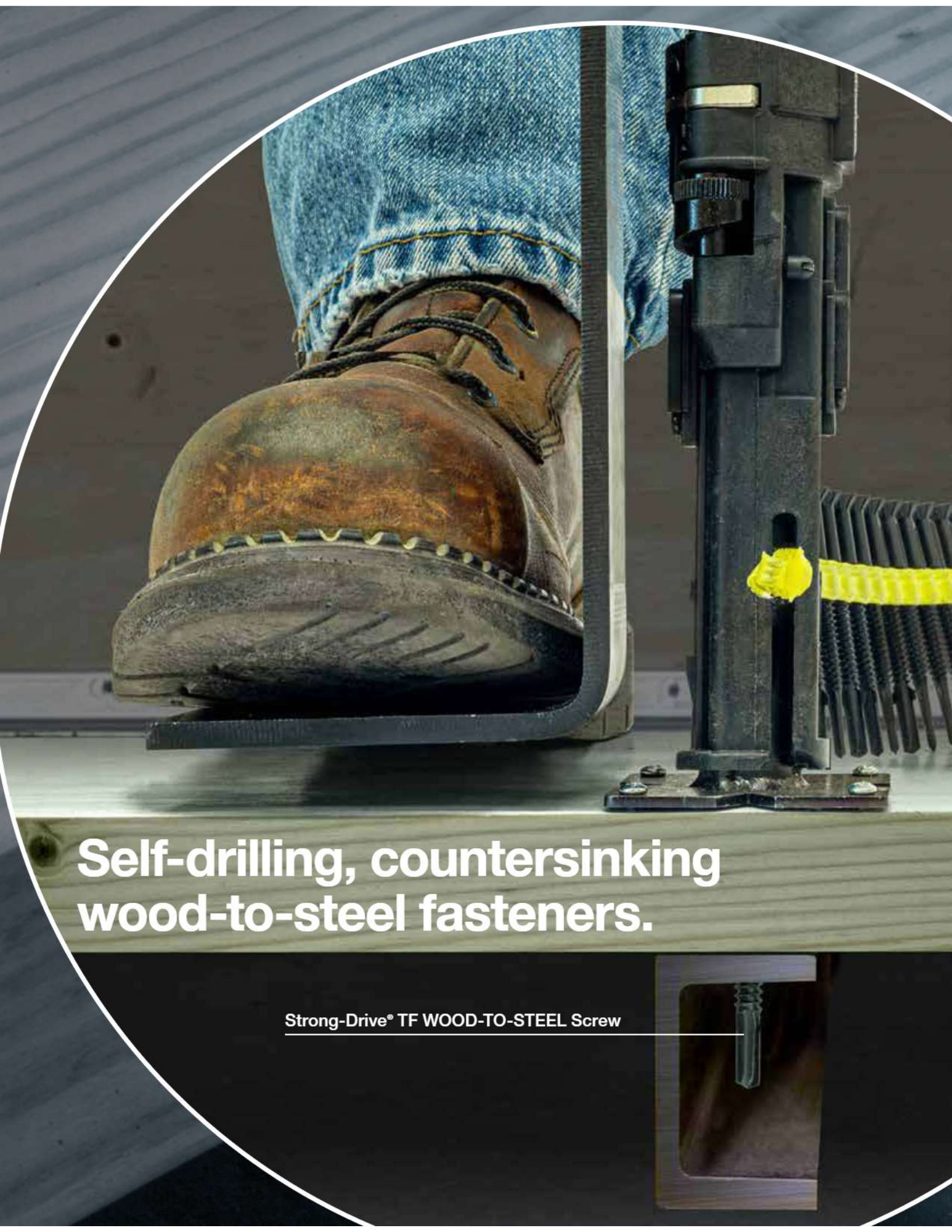

Self-drilling, countersinking wood-to-steel fasteners.

Strong-Drive® TF WOOD-TO-STEEL Screw

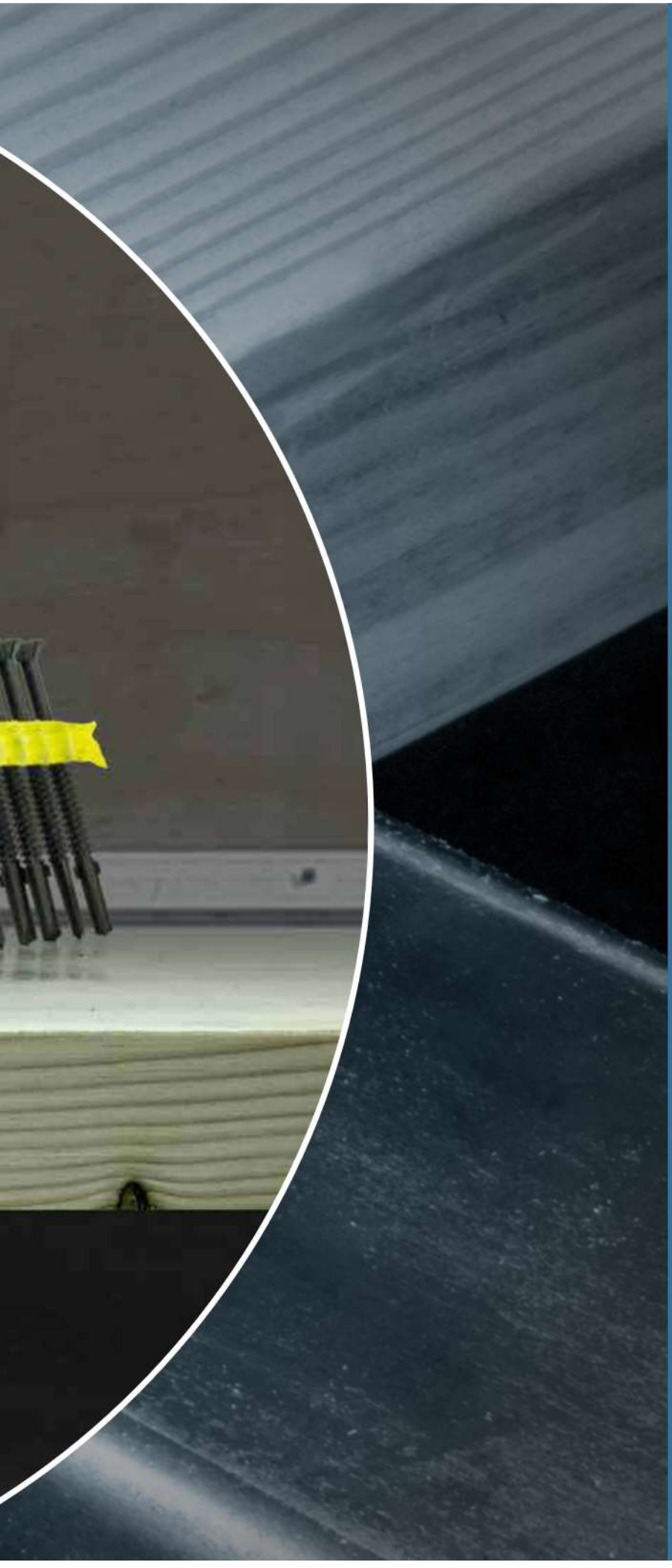

Wood and Sheathing to Steel Fastening

Wood-to-Steel Fastening
Strong-Drive® TBP WOOD-TO-STEEL Screw. 212
Strong-Drive® TF WOOD-TO-STEEL Screw 213

Sheathing-to-Steel Fastening
Strong-Drive® PPHD SHEATHING-TO-CFS Screw. 214
Strong-Drive® CBSDQ SHEATHING-TO-CFS Screw 215

Strong-Drive®
TBP WOOD-TO-STEEL Screw

Common Applications:

- Wood to hot-rolled steel (Maximum recommended thicknesses: ¼")

For more information, see pp. 115 and 235, C-F-2023 *Fastening Systems* catalog

TBP — Allowable Loads — DFL and SP Lumber Attachment to Steel (Steel Members 16 ga. – ¼" Thick)

Model No.	Length in. (mm)	Nominal Wood Thickness (in.)	Steel Thickness [mil (ga.)]	Reference DFL/SP Allowable Loads (lb.)			
				Uplift		Shear	
				$C_D = 1.0$	$C_D = 1.6$	$C_D = 1.0$	$C_D = 1.6$
TBP1460	2⅜ (60)	2x	54 (16)	195	195	210	335
			68 (14)	225	225	210	335
			97–375 (12 – 5⁄16")	245	390	215	345
TBP1475	3 (75)		54 (16)	195	195	210	335
			68 (14)	225	225	210	335
			97–375 (12 – 5⁄16")	245	390	215	345

1. For use with structural steel members up to ¼" thick or cold-formed steel members 54 mil (16 ga.) or thicker.
2. Minimum steel strength Fu = 45 ksi.
3. Product is available in two coatings. TBP screws have a black phosphorous coating. TBG screws have a mechanically galvanized (N2000) coating for additional corrosion protection.
4. Reference allowable loads are based on tests using 2x (1.5 in.) thick wood members.
5. Use increased allowable loads (C_D = 1.6) only when resisting wind or seismic forces. Values must be multiplied by all applicable adjustment factors per the NDS.
6. Minimum fastener spacing requirements to achieve allowable loads: 4" end distance, 1.5" edge distance, 1.5" between staggered rows, 3" between non-staggered rows, and 4" between fasteners in a row.
7. Visit **strongtie.com/drawings** and search for SD1-M for additional detail sheets and load tables in DWG, PDF or DXF format.

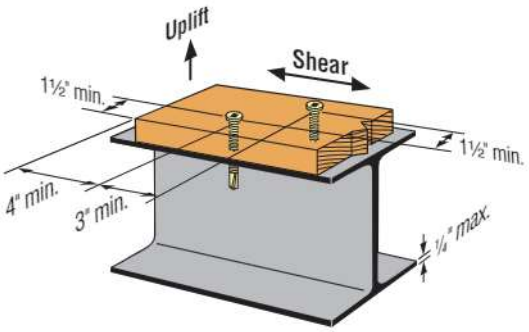

C-F-2023TECHSUP © 2023 Simpson Strong-Tie Company Inc.

Strong-Drive®
TF WOOD-TO-STEEL Screw

Common Applications:

- Wood to hot-rolled steel (Maximum recommended thickness: 15/32")

For more information, see pp. 116 and 236, C-F-2023 *Fastening Systems* catalog

TF WOOD-TO-STEEL Screw — Allowable Loads — SPF/DFL/SP Lumber Attachment to Steel (Steel Members 1/4" – 15/32" Thick)

Model No.	Length in. (mm)	Nominal Wood Thickness (in.)	Wood Species	Reference SPF, DFL, SP Allowable Loads (lb.)			
				Uplift		Shear	
				$C_D = 1.0$	$C_D = 1.6$	$C_D = 1.0$	$C_D = 1.6$
TFP1475	3 (75)	2x	SPF	190	300	210	335
			DFL	260	415	265	425
			SP	370	590	300	480

1. For use with structural steel members from 1/4" up to 15/32" thick.
2. Minimum steel strength Fu = 45 ksi.
3. Standard product available in a black phosphate coating.
4. Reference allowable loads are based on tests using 2x (1.5 in.) thick wood members.
5. Use increased allowable loads (C_D = 1.6) only when resisting wind or seismic forces. Values must be multiplied by all applicable adjustment factors per the NDS.
6. See figure for minimum spacing requirements.

TF-WOOD-TO-STEEL Screw Spacing Requirements

Condition	Direction of Load to Grain	ID	Minimum Distance or Spacing (in.)
Edge Distance	Perpendicular	①	1½
	Parallel	①	1½
End Distance	Perpendicular	②	4
	Parallel	②	4
Spacing Between Fasteners in a Row	Perpendicular	③	1¾
	Parallel	④	4
Spacing Between Rows of Fasteners	Perpendicular	⑤	2½
	Parallel	⑥	1¾
Spacing Between Staggered Rows	Perpendicular or Parallel	⑦	¾

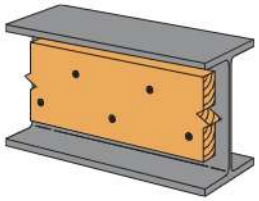

Typical web filler with 2x wood member

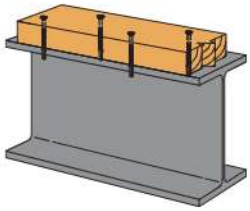

Typical top flange installation

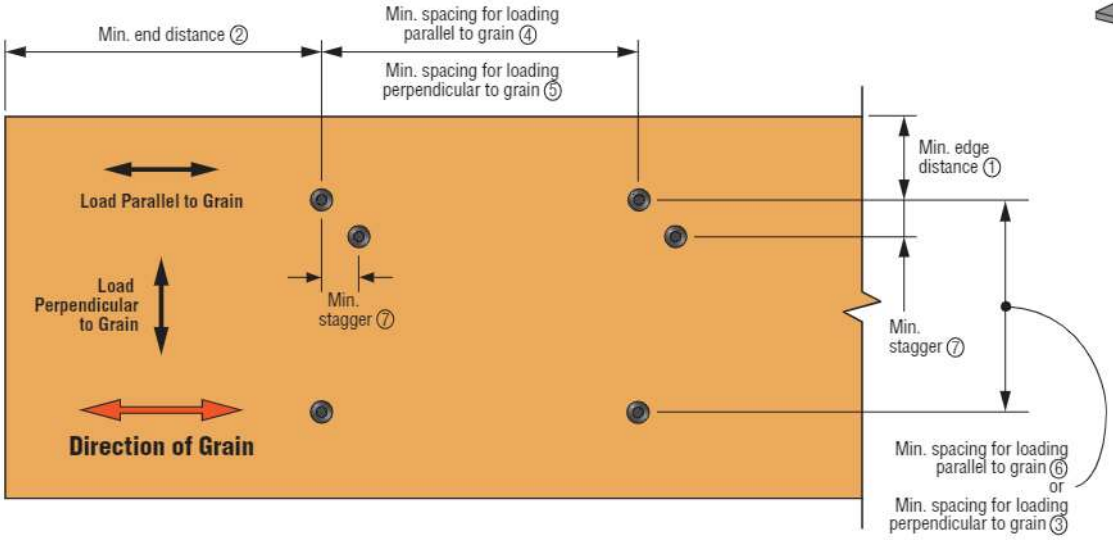

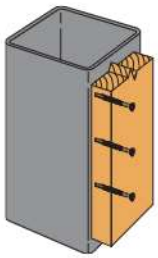

Typical tube steel post installation

C-F-2023TECHSUP © 2023 Simpson Strong-Tie Company Inc.

Strong-Drive®
PPHD SHEATHING-TO-CFS Screw

Common Application:
Wood structural panel/sheathing to cold-formed steel
(#8 — maximum thickness: 54 mil / 16 ga.; #10 and #12 — maximum thickness: 97 mil / 12 ga.)

Codes/Standards: ASTM C1513 compliant, ICC-ES ESR-4208

For more information, see pp. 118 and 239, C-F-2023 *Fastening Systems* catalog

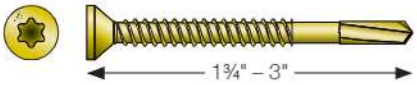

PPHD — Pullout Loads — Steel Connections

Model No.	Size	Load Description	Pullout (lb.) Steel Thickness: mil (ga.) 27 (22)	33 (20)	43 (18)	54 (16)	68 (14)	97 (12)
PPHD11516 PPHDQ11516	#8	Allowable Strength (ASD)	60	85	135	195	—	—
		Design Strength (LRFD)	100	140	220	315	—	—
		Nominal Strength	155	225	335	485	—	—
PPHD134 PPHDQ134 PPHD3	#10	Allowable Strength (ASD)	60	85	140	205	310	440
		Design Strength (LRFD)	100	140	220	330	500	700
		Nominal Strength	155	225	340	505	765	1,075
PPHDQ134	#12	Allowable Strength (ASD)	65	85	140	210	335	475
		Design Strength (LRFD)	105	140	225	335	540	760
		Nominal Strength	170	235	350	515	825	1,170

1. Screws and connections have been tested per AISI Standard Methods S904-13 and S905-13.
2. Values are based on cold-formed steel (CFS) members with a minimum yield strength, F_y of 33 ksi and minimum tensile strength, F_u of 45 ksi for 43 mil (18 ga.) to 27 mil (22 ga.), and a minimum yield strength, F_y of 50 ksi and minimum tensile strength, F_u of 65 ksi for 54 mil (16 ga.) to 97 mil (12 ga.).
3. For design purposes, steel-sheet thicknesses are 0.0283" for 27 mil (22 ga.), 0.0346" for 33 mil (20 ga.), 0.0451" for 43 mil (18 ga.), 0.0566" for 54 mil (16 ga.), 0.0713" for 68 mil (14 ga.) and 0.1017" for 97 mil (12 ga.). The actual sheet thickness shall not be less than 95% of these design thicknesses as specified in AISI S100-12.
4. A minimum of three exposed screw threads are required to achieve the loads in the Table.
5. PPHDQxxx models have Quik Guard® coating; PPHDxxx models have yellow zinc coating.

PPHD — Pull-Through Loads — Rated Sheathing Panels

Model No.	Screw Size	Load Description	Reference Pull-Through Loads (lb.) Minimum Nominal Panel Thickness (in.) Plywood 15/32	Plywood 19/32	Plywood 23/32	OSB 15/32	OSB 19/32	OSB 23/32
PPHD11516 PPHDQ11516	#8	ASD	83	84	116	49	109	117
		LRFD	179	181	250	106	235	255
		Nominal strength	415	420	580	245	545	585
PPHD134 PPHDQ134 PPHD3	#10	ASD	75	85	118	52	111	114
		LRFD	162	184	255	112	240	245
		Nominal strength	375	425	590	260	555	570
PPHDQ134	#12	ASD	135	154	165	86	140	166
		LRFD	290	330	355	185	305	360
		Nominal strength	675	770	825	430	701	830

1. The tabulated values are based on testing per AC233.
2. ASD pull-through loads based on a factor of safety of five applied to the nominal strength value (C_D = 1.0, increases to C_D = 1.6 allowed where applicable).
3. LRFD load based on adjustment of ASD load per NDS 2018, Appendix N using K_F = 3.32, ϕ_z = 0.65, and λ = 1.0.
4. PPHDQxxx models have Quik Guard® coating; PPHDxxx models have yellow zinc coating.

C-F-2023TECHSUP © 2023 Simpson Strong-Tie Company Inc.

Strong-Drive®
CBSDQ SHEATHING-TO-CFS Screw

Common Application:
Wood structural panel/sheathing to cold-formed steel

Codes/Standards: ASTM C1513 compliant, ICC-ES ESR-4208

For more information, see p. 244, C-F-2023 *Fastening Systems* catalog

CBSDQ — Pullout Loads — Steel Connections

Model No.	Size	Load Description	Reference Pullout Loads (lb.) Steel Thickness [mil (ga.)] 43 (18)	54 (16)
CBSDQ158S	#8	ASD	105	175
		LRFD	170	280
		Nominal strength	300	460
CBSDQ214S	#10	ASD	155	255
		LRFD	250	410
		Nominal strength	445	665

1. Screws and connections have been tested per AISI Standard Methods S904-17 and S905-17.
2. Values are based on cold-formed steel (CFS) members with a minimum yield strength of F_y = 33 ksi and tensile strength of F_u = 45 ksi for 43 mil (18 ga.), and a minimum yield strength of F_y = 50 ksi and F_u = 65 ksi for 54 mil (16 ga.).
3. For design purposes, steel sheet thicknesses are 0.0451 inch for 43 mil (18 ga.) and 0.0566 inch for 54 mil (16 ga.).
4. A minimum of three exposed screw threads are required to achieve the loads in the Table.
5. Maximum grip length for the CBSDQ158S is 1.15". Maximum grip length for the CBSDQ214S is 1.73". Grip length is the total connection thickness plus three protruding threads.

CBSDQ — Pull-Through Loads — Rated Sheathing Panels

Model No.	Size	Load Description	Reference Pull-Through Loads (lb.) Minimum Nominal Panel Thickness (in.) OSB 15/32	19/32	23/32
CBSDQ158S	#8	ASD	58	63	86
		LRFD	125	135	185
		Nominal strength	290	315	430
CBSDQ214S	#10	ASD	47	47	78
		LRFD	102	102	168
		Nominal strength	235	235	390

1. The tabulated values are based on testing per AC233.
2. ASD pull-through loads based on a factor of safety of five applied to the nominal strength value (C_D = 1.0, increases to C_D = 1.6 allowed when applicable).
3. LRFD load based on adjustment of ASD load per NDS 2018 Appendix N using K_F = 3.32, Φ_z = 0.65, and λ = 1.0.
4. Maximum grip length for the CBSDQ158S is 1.15". Maximum grip length for the CBSDQ214S is 1.73". Grip length is the total connection thickness plus three protruding threads.

C-F-2023TECHSUP © 2023 Simpson Strong-Tie Company Inc.

Quik Guard® coated Strong-Drive® PPHD SHEATHING-TO-CFS screw installation using Quik Drive® system

High-performance sheathing-to-CFS connections.

SIMPSON Strong-Tie

Cold-Formed Steel (CFS) Systems

Cold-Formed Steel (CFS) Systems

CFS Systems

Strong-Drive® PPHD/CBSDQ/FHSD/WSFLRV Screws 218
Strong-Drive® DWF/DWFSD Screws. 221
Strong-Drive® PHSD/FPHSD Screws 222

Strong-Drive®
PPHD/CBSDQ/FHSD/WSFLRV Screws

For More Product Information:

- Strong-Drive® PPHD Sheathing-to-CFS screw: see pp. 118 and 239, C-F-2023 *Fastening Systems* catalog
- CBSDQ Sheathing screw: see p. 244, C-F-2023 *Fastening Systems* catalog
- FHSD Wood-to-CFS screw: see p. 246, C-F-2023 *Fastening Systems* catalog
- WSFLRV Wood-to-CFS/Aluminum screw: see p. 247, C-F-2023 *Fastening Systems* catalog
- See ESR-4208 for Strong-Drive PPHD Sheathing-to-CFS and CBSDQ Sheathing screws design and installation with wood structural panels.

Strong-Drive PPHD SHEATHING-TO-CFS Screw

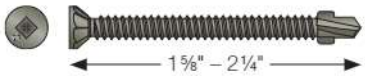

CBSDQ Sheathing-to-CFS Screw

FHSD Wood-to-CFS Screw

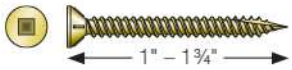

WSFLRV Wood-to-CFS/Aluminum Screw

PPHD, CBSDQ, FHSD, WSFLRV Screws[11] — Nominal Shear Strength (R_n) for Wind and Other In-Plane Loads for Shearwalls (lb./ft.)

Assembly Description	Maximum Aspect Ratio (h/w)	Fastener Spacing at Panel Edges (in.)			
		6	4	3	2
15/32" structural 1 sheathing (4 ply), one side	2:1	1,065[3]	—	—	—
7/16" rated sheathing (OSB), one side	2:1	910[3]	1,410	1,735	1,910
7/16" rated sheathing (OSB), one side oriented perpendicular to framing	2:1	1,020	—	—	—
7/16" rated sheathing (OSB), one side	2:1[5]	—	1,025	1,425	1,825

1. Nominal strength shall be multiplied by the resistance factor (ϕ = 0.65) to determine the design strength or divided by the safety factor (Ω = 2.0) to determine the allowable strength.
2. Screws in the field of the panel shall be installed 12" (305 mm) on center (o.c.).
3. Where fully blocked gypsum board is applied to the opposite side of this assembly, per Table C2.1-2 AISI S213 Standard *North American Standard for Cold-Formed Steel Framing — Lateral Design 2018 Edition with Supplement No. 1 and Commentary* with screw spacing at 7" (178 mm) o.c. edge and 7" (178 mm) o.c. field, these nominal strengths are permitted to be increased by 30%.
4. For walls with material of the same type and nominal strength applied to opposite faces of the same wall, the available strength of material of same capacity is cumulative. Where the material nominal strengths are not equal, the available strength shall be either two times the available strength of the material with the smaller value or shall be taken as the value of the stronger side, whichever is greater. Summing the available strengths of dissimilar material applied to opposite faces or to the same wall line is not allowed.
5. Shearwall height to width aspect ratio (h/w) greater than 2:1, but not exceeding 4:1, shall be permitted provided the nominal shear strength is multiplied by 2w/h.
6. For wood structural panel sheathed shearwalls, tabulated R_n values shall be applicable for short-term load duration (wind loads). For other in-plane lateral loads of normal or permanent load duration as defined by the AWC NDS, the values in the table above for wood structural panel sheathed shearwalls shall be multiplied by 0.63 (normal) or 0.56 (permanent).
7. Maximum stud spacing 24" o.c.
8. All sheathing edges shall be attached to framing or 1½" width 33 mil blocking.
9. Table based on Table C2.1-1 AISI S213 Standard *North American Standard for Cold-Formed Steel Framing — Lateral Design 2018 Edition with Supplement No. 1 and Commentary*.
10. See General Load Table on p. 22 for screw strength.
11. #8 screws — PPHD, CBSDQ, FHSD, WSFLRV. #10 screws — FHSD.
12. Stud, track and blocking (if applicable) shall be a minimum of 33 mil.

C-F-2023TECHSUP © 2023 Simpson Strong-Tie Company Inc.

Strong-Drive®
PPHD/CBSDQ/FHSD/WSFLRV Screws (cont.)

PPHD, CBSDQ, FHSD, WSFLRV Screws[12] — Nominal Shear Strength (R_n) for Seismic and Other In-Plane Loads for Shearwall (lb./ft.)

Assembly Description	Maximum Aspect Ratio (h/w)	Fastener Spacing at Panel Edges[2] (in.)				Designation Thickness[5,8] of Stud, Track and Blocking (mil)	Required Sheathing Screw Size
		6	4	3	2		
15/32" structural 1 sheathing (4 ply), one side	2:1[3]	780	990	—	—	33 or 43	8
	2:1	890	1,330	1,775	2,190	43	10
7/16" rated sheathing (OSB), one side	2:1[3]	700	915	—	—	68	8
	2:1[3]	825	1,235	1,545	2,060	48	8
	2:1	940	1,410	1,760	2,350	54	8
	2:1	1,232	1,848	2,310	3,080	68	10

1. Nominal strength shall be multiplied by the resistance factor ($\phi = 0.60$) to determine the design strength or divided by the safety factor ($\Omega = 2.5$) to determine the allowable strength.
2. Screws in the field of the panel shall be installed 12" (305 mm) on center (o.c.).
3. Shearwall height to width aspect ratio (h/w) greater than 2:1, but not exceeding 4:1, shall be permitted provided the nominal shear strength is multiplied by 2w/h.
4. For walls with material of the same type and nominal strength applied to opposite faces of the same wall, the available strength of material of same capacity is cumulative. Where the material nominal strengths are not equal, the available strength shall be either two times the available strength of the material with the smaller value or shall be taken as the value of the stronger side, whichever is greater. Summing the available strengths of dissimilar material applied to opposite faces or to the same wall line is not allowed.
5. Substitution of a stud or track of a different designation thickness is not permitted.
6. Wall studs and track shall be of ASTM A1003 Structural Grade 33 (Grade 230) Type H steel for members with a designation thickness of 33 and 43 mil, and A1003 Structural Grade 50 (Grade 340) Type H steel for members with a designation thickness equal to greater than 54 mil.
7. For wood structural panel sheathed shearwalls, tabulated R_n values shall be applicable for short-term load duration (seismic loads). For other in-plane lateral loads of normal or permanent load duration as defined by the AF&PA NDS, the values in the table above for wood structural panel sheathed shearwalls shall be multiplied by 0.63 (normal) or 0.56 (permanent).
8. Maximum stud spacing 24" o.c.
9. All sheathing edges shall be attached to framing or 1½" width 33 mil blocking.
10. Table based on Table C2.1-3 AISI S213 Standard *North American Standard for Cold-Formed Steel Framing — Lateral Design 2018 Edition with Supplement No. 1 and Commentary*.
11. See General Load Table on p. 22 for screw strength.
12. #8 screws — PPHD, CBSDQ, FHSD, WSFLRV. #10 screws — FHSD.

C-F-2023TECHSUP © 2023 Simpson Strong-Tie Company Inc.

Strong-Drive®

1½" FHSD **Wood-to-CFS** Screw for Use in Plywood-to-Aluminum Connections

The Simpson Strong-Tie FHSD Wood-to-CFS screw (SSFHSD112S1016) is an ASTM C1513 compliant, #10 flat head, 1½" long, Type 410 stainless-steel self-tapping screw. This information is related to the use of this screw for ¾" plywood to ½" aluminum connections.

Third-party witnessed testing was performed in accordance with AISI Standard Test Method S904-08 to determine screw strength.

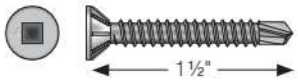

FHSD Wood-to-CFS Screw

FHSD Wood-to-CFS Screw Strength

Nominal Screw Length (in.)	Size	Threads per Inch	Nominal Strength (lb.)		Allowable Load (lb.)	
			Shear, Pss	Tension, Pts	Shear, Pss/Ω	Tension, Pts/Ω
1½	#10	16	2,275	3,435	760	1,145

FHSD Wood-to-CFS Screw — Allowable Loads

Single Shear (lb.)	Pullout (lb.)	Pull-Through (lb.)
217	207	137

1. Allowable loads are shown with a duration of load for the ¾" plywood of C_D=1.0. Loads may be increased for load duration per the building code up to C_D=1.6. Tabulated values must be multiplied by all applicable adjustment factors.

C-F-2023TECHSUP © 2023 Simpson Strong-Tie Company Inc.

Strong-Drive®
DWF/DWFSD Screws

For more information, see pp. 244–245, C-F-2023 *Fastening Systems* catalog

DWF Drywall-to-CFS Screw

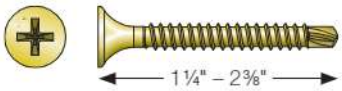

DWFSD Drywall-to-CFS Screw

DWF/DWFSD Screws — Nominal Strength (R_n) for Wind and Seismic for Shearwalls Faced with ½" Gypsum Board (lb./ft.)

Assembly Description	Max. Aspect Ratio (h/w)	Fastener Spacing at Panel Edges/Field (in.)			
		7/7	4/4	4/12	8/12
½" gypsum board on one side of wall; steel studs max. 24" o.c.	2:1	290	425	295	230

1. Nominal strength shall be multiplied by the resistance factor (ϕ = 0.6 LRFD Seismic, ϕ = 0.65 LRFD Wind) to determine design strength or divided by the safety factor (Ω = 2.5 ASD Seismic, Ω = 2.0 ASD Wind) to determine allowable strength.
2. For gypsum sheathed shearwalls, tabulated values shall be applicable for short-term load duration only (wind or seismic loads).
3. Gypsum board shall comply with ASTM C1396.
4. Gypsum board shall be applied horizontal with 33 mil strap blocking of 1½" width, In addition, solid blocking is required between the first two end studs. Alternatively, sheets may be applied vertically or values can be multiplied by 0.35.
5. Studs and track shall be a minimum thickness of 33 mil.
6. Table based on Table C2.1-2 AISI S213 Standard *North American Standard for Cold-Formed Steel Framing — Lateral Design 2007 Edition with Supplement No. 1 and Commentary*.

C-F-2023TECHSUP © 2023 Simpson Strong-Tie Company Inc.

Strong-Drive®
PHSD/FPHSD Screws

For more information, see p. 237, C-F-2023 *Fastening Systems* catalog

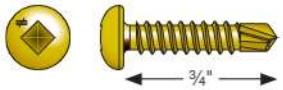

PHSD FRAMING-TO-CFS Screw

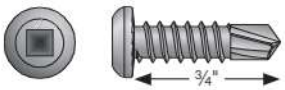

FPHSD FRAMING-TO-CFS Screw

PHSD (#8) Screw — Sheet-Steel Sheathing to CFS, Nominal Shear Strength (R_n) for Wind (W) and Seismic (S) for Shearwalls[1] (lb./ft.)

Assembly Description	Max. Aspect Ratio (h/w)	Fastener Spacing at Panel Edges[2] (in.)				Designation Thickness[5] of Stud, Track and Blocking[7] (mil)
		6	4	3	2	
0.018" sheet steel, one side	2:1	485 (W) 390 (S)	—	—	—	33 (min.)
0.027" sheet steel, one side	4:1	—	1,000	1,085	1,170	43 (min.)
	2:1[3]	647	710	778	845	33 (min.)
0.018" sheet steel, both sides	2:1	970 (W) 780 (S)	—	—	—	33 (min.)
0.027" sheet steel, both sides	4:1	—	2,000	2,170	2,340	43 (min.)
	2:1[3]	1,294	1,420	1,556	1,690	33 (min.)

1. Nominal strength shall be multiplied by the resistance factor (ϕ = 0.6, LRFD Seismic, ϕ = 0.65, LRFD Wind) to determine design strength or divided by the safety factor (Ω = 2.5, ASD Seismic, Ω = 2.0, ASD Wind) to determine allowable strength.
2. Screws in the field of the panel shall be installed 12" (305 mm) on center (o.c.).
3. Shearwall height-to-width aspect ratio (h/w) greater than 2:1, but not exceeding 4:1, shall be permitted provided the nominal strength values are multiplied by 2w/h.
4. Wall studs and track shall be of ASTM A1003 Structural Grade 33 (Grade 230) Type H steel for members with a designation thickness of 33 and 43 mil.
5. In lieu of blocking, panel edges shall be permitted to be overlapped and attached to each other with screw spacing as required for panel edges. Where such a connection is used, tabulated design values shall be reduced 30%.
6. Maximum stud spacing 24" o.c.
7. Blocking, if applicable, shall be a minimum 33 mil, 1½" width.
8. Table based on Table C2.1-1 AISI S213 Standard *North American Standard for Cold-Formed Steel Framing — Lateral Design 2007 Edition with Supplement No. 1 and Commentary*.

C-F-2023TECHSUP © 2023 Simpson Strong-Tie Company Inc.

Strong-Drive®
PHSD/FPHSD Screws (cont.)

FPHSD (#10) Screw — Sheet-Steel Sheathing to CFS, Nominal Shear Strength (R_n) for Wind (W) and Seismic (S) for Shearwalls[1] (lb./ft.)

Assembly Description	Max. Aspect Ratio (h/w)	Fastener Spacing at Panel Edges[2] (in.)				Designation Thickness[5] of Stud, Track and Blocking[7] (mil)
		6	4	3	2	
0.018" sheet steel, one side	2:1	485 (W) 390 (S)	—	—	—	33 (min.)
0.027" sheet steel, one side	4:1	—	1,000	1,085	1,170	43 (min.)
	2:1[3]	647	710	778	845	33 (min.)
0.018" sheet steel, both sides	2:1	970 (W) 780 (S)	—	—	—	33 (min.)
0.027" sheet steel, both sides	4:1	—	2,000	2,170	2,340	43 (min.)
	2:1[3]	1,294	1,420	1,556	1,690	33 (min.)

1. Nominal strength shall be multiplied by the resistance factor (ϕ = 0.6, LRFD Seismic, ϕ = 0.65, LRFD Wind) to determine design strength or divided by the safety factor (Ω = 2.5, ASD Seismic, Ω = 2.0, ASD Wind) to determine allowable strength.
2. Screws in the field of the panel shall be installed 12" (305 mm) on center (o.c.).
3. Shearwall height-to-width aspect ratio (h/w) greater than 2:1, but not exceeding 4:1, shall be permitted provided the nominal strength values are multiplied by 2w/h.
4. Wall studs and track shall be of ASTM A1003 Structural Grade 33 (Grade 230) Type H steel for members with a designation thickness of 33 and 43 mil.
5. In lieu of blocking, panel edges shall be permitted to be overlapped and attached to each other with screw spacing as required for panel edges. Where such a connection is used, tabulated design values shall be reduced 30%.
6. Maximum stud spacing 24" o.c.
7. Blocking, if applicable, shall be a minimum 33 mil 1½" width.
8. Table based on Table C2.1-1 AISI S213 Standard *North American Standard for Cold-Formed Steel Framing — Lateral Design 2007 Edition with Supplement No. 1 and Commentary*.

C-F-2023TECHSUP © 2023 Simpson Strong-Tie Company Inc.

Strong-Drive® XL LARGE-HEAD METAL Screw

Maximize load values for metal-to-metal fastening.

General Metal-to-Metal Fastening

CFS Connections

PC Screws 226
Strong-Drive® PHSD FRAMING-TO-CFS Screw 227
Strong-Drive® FPHSD FRAMING-TO-CFS Screw 227
Strong-Drive® XE EXTERIOR STRUCTURAL METAL Screw . 228
Strong-Drive® SELF-DRILLING X METAL Screw 229
Self-Drilling E Metal Screw 231

Steel Deck

Steel-Deck Fastening 232
Steel-Deck Diaphragm Calculator 233
Strong-Drive® XL LARGE-HEAD and
XM MEDIUM-HEAD METAL Screws 234

PC Screws

For more information, see p. 233, C-F-2023 *Fastening Systems* catalog

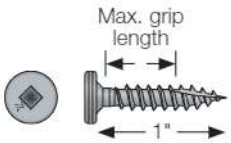

Cold-Formed Steel (CFS) Member Connection Loads

Size-TPI x Length	Model No.	Nominal Dia.[7] (in.)	Load Description	Reference Shear (lb.)						Reference Pullover (lb.)						Reference Pullout (lb.)						
				Steel Thickness: [mil (ga.)]						Steel Thickness: [mil (ga.)]						Steel Thickness: [mil (ga.)]						
				27	33	43	54	68	97	27	33	43	54	68	97	22	27	33	43	54	68	97
				(22)	(20)	(18)	(16)	(14)	(12)	(22)	(20)	(18)	(16)	(14)	(12)	(24)	(22)	(20)	(18)	(16)	(14)	(12)
Pancake-Head Screw — Metal Roofing to Wood (or light-gauge CFS)																						
#10-12 x 1	PC1BS1012	0.190	ASD[2]	290	345	—	—	—	—	170	255	475	—	—	—	—	—	106	136	—	—	—
			Nominal load[4]	660	785					475	765	1,195						265	335			

1. Screws and screw connections have been tested per AISI Standard Test Method S904 and S905.
2. The tabulated ASD loads for cold-formed steel (CFS) members are based on the lower of the screw strength or the strength of the screw in the connected members per AISI S100.
3. The safety factor is based on AISI S100 for tested connections.
4. The nominal load values listed are achieved under laboratory conditions and should not be used for design loads.
5. Values are based on CFS members with a minimum yield strength of F_y = 33 ksi and tensile strength of F_u = 45 ksi for 43 mil (18 ga.) to 27 mil (22 ga.), minimum yield strength of F_y = 50 ksi and tensile strength of F_u = 65 ksi for 22 mil (24 ga.), and a minimum yield strength of F_y = 50 ksi and F_u = 65 ksi for 54 mil (16 ga.) and thicker.
6. For design purposes, steel sheet thicknesses are 0.0227" for 22 mil, 0.283" for 27 mil, 0.0346" for 33 mil, 0.0451" for 43 mil, 0.0566" for 54 mil, 0.0713" for 68 mil, and 0.1017" for 97 mil. The actual sheet thickness shall not be less than 95% of these design thicknesses as specified in AISI S100.
7. Screw diameters per AISI S200 General Provision Commentary Table D1.1.
8. Minimum required screw length is the lesser of ¾" or the minimum length required for the screw to extend through the steel connection a minimum of three exposed threads per AISI S200 General Provisions Standard Section D1.3.
9. Maximum grip length for the PC1BS1012 is 0.46". Grip length is the total connection thickness plus three protruding threads.
10. Larger of screw head or washer diameter, d_w, for #10 and #12 screws is 0.375".
11. The allowable load (ASD) values shown are not permitted to be increased for short-duration loads such as wind or earthquake loads.
12. The lower of the pullover and pullout allowable load should be used for tension design.
13. The tabulated shear values are based on the thinner steel member in connection. Steel thickness for both members must be in the range of 12–22 gauge.

Wood Member Connection Withdrawal Loads

Size-TPI x Length	Model No.	Nominal Diameter[4] (in.)	Load Description	Reference Withdrawal (lb.)					
				Plywood			OSB		SYP
				½"	⅝"	¾"	7/16"	¾"	2x
Pancake Head Screw — Metal Roofing to Wood									
#10-12 x 1	PC1BS1012	0.190	Allowable load[1,2]	55	55	60	33	51	117
			Average ultimate load[3]	275	275	300	165	255	585

1. Values based on the lower screw strength or strength of the screw in the connected members.
2. The tabulated allowable loads for wood members are based on factor of safety of 5 as specified in AC233, and C_D = 1.0. Withdrawal may be increased for load duration per the building code up to C_D=1.6.
3. The average ultimate loads are achieved under laboratory conditions and should not be used for design purposes.
4. Screw diameters per AISI S200 General Provisons Commentary Table D1-1.
5. See p. 22 for information on screw strength.

C-F-2023TECHSUP © 2023 Simpson Strong-Tie Company Inc.

Strong-Drive® PHSD FRAMING-TO-CFS Screw

Common Applications:

- Cold-formed steel framing and sheet-steel sheathing to cold-formed steel

Codes/Standards: ASTM C1513 compliant

For more information, see p. 237, C-F-2023 *Fastening Systems* catalog

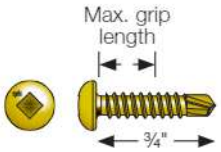

PHSD Screw — Cold-Formed Steel Member Connection Loads, Steel to Steel

Size-TPI x Length	Model No.	Nominal Dia. (in.)	Load Description	Reference Shear (lb.) Steel Thickness: [mil (ga.)]			Reference Pullover (lb.) Steel Thickness: [mil (ga.)]			Reference Pullout (lb.) Steel Thickness: [mil (ga.)]		
				27 (22)	33 (20)	43 (18)	27 (22)	33 (20)	43 (18)	27 (22)	33 (20)	43 (18)
#8-18 x ¾	PHSD34S0818	0.164	ASD load	181	235	305	220	345	390	67	125	133
			LRFD load	290	375	490	350	550	620	107	200	213
			Nominal strength	410	590	765	540	845	955	164	310	325

1. Screws and screw connections have been tested per AISI Standard Test Method S904 and S905. This screw is not recommended for 16 gauge and thicker steel. Provide a ⅛" diameter predrilled hole in 16 gauge and thicker steel, if this screw should be used.
2. The tabulated ASD and LRFD allowable loads for cold-formed steel (CFS) members are based on the lower of the screw strength or the strength of the screw in the connected members per AISI S100.
3. The safety factor is based on AISI S100-07.
4. The average ultimate/nominal values listed should not be used for design loads.
5. Values are based on CFS members with a minimum yield strength of F_y = 33 ksi and tensile strength of F_u = 45 ksi for 43 mil (18 ga.) to 27 mil (22 ga.), minimum yield strength of F_y = 50 ksi and F_u = 65 ksi for 54 mil (16 ga.) to 97 mil (12 ga.).
6. For design purposes, steel-sheet thicknesses are 0.0283" for 27 mil, 0.0346" for 33 mil, 0.0451" for 43 mil, 0.0566" for 54 mil, 0.0713" for 68 mil, and 0.1017" for 97 mil. The actual sheet thickness shall not be less than 95% of these design thicknesses as specified in AISI S100.
7. Screw diameters per AISI S200 General Provision Commentary Table D1.1.
8. Minimum required screw length is the lesser of ¾" or the minimum length required for the screw to extend through the steel connection a minimum of three exposed threads per AISI S200 General Provisions Standard Section D1.3.
9. Maximum grip length for the PHSD34S0818 is 0.40". Grip length is the total connection thickness plus three protruding threads.
10. Screw head or washer diameter, d_w is 0.307".
11. The allowable load (ASD) values shown are not permitted to be increased for short-duration loads such as wind or earthquake loads.
12. The lower of the pullover and pullout allowable load should be used for tension design.
13. The tabulated shear values are based on the thinner steel member in connection. Steel thickness for both members must be in the range of 12–22 gauge.
14. See general load tables on p. 22 for screw strength.

Strong-Drive® FPHSD FRAMING-TO-CFS Screw

Common Application:

Cold-formed steel framing and sheet steel sheathing to cold-formed steel

Codes/Standards: ASTM C1513 compliant, ICC-ES ESR-3006

For more information, see p. 237, C-F-2023 *Fastening Systems* catalog

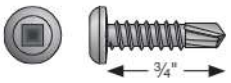

FPHSD — Cold-Formed Steel Member Connection Loads, Steel to Steel

Size-TPI x Length	Model No.	Nominal Dia. (in.)	Load Description	Reference Shear (lb.) Steel Thickness: [mil (ga.)]						Reference Pullover (lb.) Steel Thickness: [mil (ga.)]						Reference Pullout (lb.) Steel Thickness: [mil (ga.)]					
				27 (22)	33 (20)	43 (18)	54 (16)	68 (14)	97 (12)	27 (22)	33 (20)	43 (18)	54 (16)	68 (14)	97 (12)	27 (22)	33 (20)	43 (18)	54 (16)	68 (14)	97 (12)
#10-16 x ¾	FPHSD34S1016	0.190	ASD load	175	235	380	570	570	570	280	365	485	695	740	740	76	95	156	240	340	505
			LRFD load	280	375	605	855	855	855	445	585	775	1,110	1,110	1,110	123	151	250	380	545	805
			Nominal strength	395	535	860	1,305	1,305	1,305	685	895	1,190	1,705	2,215	2,215	190	230	385	585	840	1,235
#12-14 x ¾	FPHSD34S1214	0.216	ASD load	205	260	410	610	610	610	240	330	430	630	840	1,125	76	95	159	240	345	530
			LRFD load	330	420	650	975	975	975	390	530	685	1,005	1,340	1,690	123	151	255	385	550	855
			Nominal strength	485	610	930	1,385	1,385	1,385	595z	815	1,050	1,540	2,060	2,065	190	230	390	590	845	1,295

1. Screws and connections have been tested per AISI Standard Method S904 and S905.
2. The tabulated ASD and LRFD allowable loads for cold-formed steel (CFS) members are based on the lower of the screw strength or the strength of the screw in the connected members per AISI S100.
3. Values are based on CFS members with a minimum yield strength of F_y = 33 ksi and tensile strength of F_u = 45 ksi for 43 mil (18 ga.) to 27 mil (22 ga.), minimum yield strength of F_y = 50 ksi and F_u = 65 ksi for 54 mil (16 ga.) to 97 mil (12 ga.).
4. For design purposes, steel sheet thicknesses are 0.0283" for 27 mil, 0.0346" for 33 mil, 0.0451" for 43 mil, 0.0566" for 54 mil, 0.0713" for 68 mil, and 0.1017" for 97 mil. The actual sheet thickness shall not be less than 95% of these design thicknesses as specified in AISI S100.
5. Screw diameters per AISI S200 General Provision Commentary Table D1.1.
6. Minimum required screw length is the lesser of ¾" or the minimum length required for the screw to extend through the steel connection a minimum of three exposed threads per AISI S200 General Provisions Standard Section D1.3.
7. Maximum grip length for the FPHSD34S1016 is 0.31". Maximum grip length for the FPHSD34S1214 is 0.28". Grip length is the total connection thickness plus three protruding threads.
8. Screw head d_w for #10 and #12 screws is 0.357".
9. The allowable load (ASD) values shown are not permitted to be increased for short-duration loads such as wind or earthquake loads.
10. The lower of the pullover and pullout allowable load should be used for tension design.
11. The tabulated shear values are based on the thinner steel member in connection. Steel thickness for both members must be in the range of 12–22 gauge.
12. See the general load tables on p. 22 for screw strength.

C-F-2023TECHSUP © 2023 Simpson Strong-Tie Company Inc.

Strong-Drive®
XE EXTERIOR STRUCTURAL METAL Screw

Structural Metal Connectors

Common Application:
Only fastener load rated for Simpson Strong-Tie L70Z and LS70Z connectors for use with Trex® Elevations™ steel deck framing

For more information, see p. 114, C-F-2023 *Fastening Systems* catalog

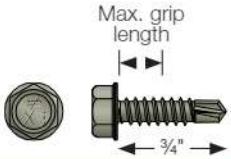

Cold-Formed Steel Member Connection Loads, Steel to Steel

Size-TPI x Length	Model No.	Nominal Dia. d (in.)	Washer Dia. d_w (in.)	Load Description	Reference Shear (lb.) Steel Thickness: [mil (ga.)]						Reference Pullover (lb.) Steel Thickness: [mil (ga.)]						Reference Pullout (lb.) Steel Thickness: [mil (ga.)]					
					27 (22)	33 (20)	43 (18)	54 (16)	68 (14)	97 (12)	27 (22)	33 (20)	43 (18)	54 (16)	68 (14)	97 (12)	27 (22)	33 (20)	43 (18)	54 (16)	68 (14)	97 (12)
#10-16 x ¾	XEQ34B1016	0.19	0.4	Allowable strength (ASD)	182	235	365	465	465	465	330	425	605	785	785	785	64	95	128	226	306	501
				Design strength (LRFD)	292	375	585	695	695	695	525	675	970	1,175	1,175	1,175	103	152	205	361	490	801
				Nominal strength	423	535	830	1,290	1,290	1,290	805	1,035	1,485	2,065	2,065	2,065	167	234	348	555	750	1,225

1. Screws and their connections have been tested per AISI Standard Test Method S904 and S905.
2. Loads are based on cold-formed steel members with a minimum yield strength, F_y = 33 ksi and tensile strength, F_u = 45 ksi for 43 mil (18 ga.) and thinner, and a minimum yield strength, F_y = 50 ksi and tensile strength, F_u = 65 ksi for 54 mil (16 ga.) and thicker.
3. Screws shall extend through the connection with a minimum of three exposed threads per AISI General Provisions Standard Section D1.3.
4. Maximum grip length for the XEQ34B1016 is 0.34". Grip length is the total connection thickness plus three protruding threads.

Screw Strength

Size-TPI x Length	Nominal Strength		Design Strength (LRFD) $\phi = 0.5$ (lb.)		Allowable Strength (ASD) $\Omega = 3.0$ (lb.)	
	P_{ss}	P_{ts}	ϕP_{ss}	ϕP_{ts}	P_{ss}/Ω	P_{ts}/Ω
#10-16 x ¾	1,390	2,350	695	1,175	465	785

P_{ss} — Shear strength
P_{ts} — Tensile strength

Allowable Loads for Connectors with Exterior Steel Deck Framing

Model No.	Length (in.)	Fasteners	Allowable Loads (lb.) (F_1) 43 mil (18 ga.)	Allowable Loads (lb.) (F_1) 68 mil (14 ga.)
L70Z	7	(8) #10	935	1,265
LS70Z	6⅜	(10) #10	600	1,070

1. Loads are for one part only.
2. Loads are for 8" headers/joists.
3. F_1 load refers to the download or the uplift loads acting along the web of the joist/header.
4. The Strong-Drive XE Exterior Structural Metal Screw is the only fastener load rated for use with L70Z/LS70Z connectors and New Castle Steel™ steel deck framing.

C-F-2023TECHSUP © 2023 Simpson Strong-Tie Company Inc.

Strong-Drive®
SELF-DRILLING X METAL Screw

Common Application:
Steel decking-to-structural steel cold-formed steel framing and steel stitching

Codes/Standards: ICC-ES ESR-3006 and IAPMO-UES ER-326 (including City of LA Supplements), State of Florida FL16937, ASTM C1513 compliant, FM Approval #3045651, SDI DDM03 Appendix VII, SDI DDM04

For more information, see pp. 113 and 242, C-F-2023 *Fastening Systems* catalog

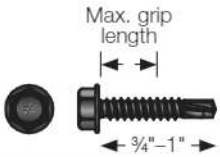

X Metal Screw — Cold-Formed Steel Connection Loads

Size-TPI x Length	Model No.	Nominal Dia. (in.)[7]	Load Description	Reference Shear (lb.)						Reference Pullover (lb.)						Reference Pullout (lb.)					
				Steel Thickness: [mil (ga.)]						Steel Thickness: [mil (ga.)]						Steel Thickness: [mil (ga.)]					
				27	33	43	54	68	97	27	33	43	54	68	97	27	33	43	54	68	97
				(22)	(20)	(18)	(16)	(14)	(12)	(22)	(20)	(18)	(16)	(14)	(12)	(22)	(20)	(18)	(16)	(14)	(12)
#10-16 x ¾	X34B1016	0.190	ASD	175	235	360	540	540	540	330	400	475	645	925	975	71	87	129	200	270	445
#10-16 x 1	XQ1S1016 X1S1016		LRFD	280	375	570	810	810	810	525	640	755	1,035	1,465	1,465	114	139	205	320	430	715
			Nominal strength	400	535	815	1,290	1,290	1,290	805	990	1,160	1,585	2,260	2,695	174	215	315	490	660	1,095
#12-14 x 1	XQ1S1214 X1S1214	0.216	ASD	176	235	385	595	840	840	295	375	525	785	1,045	1,210	74	96	147	215	325	500
			LRFD	280	375	610	950	1,265	1,265	470	600	835	1,255	1,670	1,875	117	154	235	340	520	795
			Nominal strength	400	535	870	1,350	2,135	2,135	720	920	1,285	1,925	2,565	2,965	180	235	360	520	800	1,220

1. Screws and screw connections have been tested per AISI Standard Test Method S904 and S905 with the exception of 22-gauge values which are based on calculations of the AISI S100.
2. The tabulated ASD and LRFD allowable loads for cold-formed steel (CFS) members are based on the lower of the screw strength or the strength of the screw in the connected members per AISI S100.
3. The safety factor Ω and resistance factor ϕ used to determine the ASD and LRFD strength are based on AISI S100.
4. The nominal strength values listed are achieved under laboratory conditions and should not be used for design loads.
5. Values are based on CFS members with a minimum yield strength of F_y = 33 ksi and tensile strength of F_u = 45 ksi for 43 mil (18 ga.) to 27 mil (22 ga.), minimum yield strength of F_y = 50 ksi and F_u = 65 ksi for 54 mil (16 ga.) to 97 mil (12 ga.), and a minimum yield strength of F_y = 36 ksi and F_u = 58 ksi for ⅛" and thicker.
6. For design purposes, steel-sheet thicknesses are 0.0283" for 27 mil, 0.0346" for 33 mil, 0.0451" for 43 mil, 0.0566" for 54 mil, 0.0713" for 68 mil,and 0.1017" for 97 mil. The actual sheet thickness shall not be less than 95% of these design thicknesses as specified in AISI S100.
7. Screw diameters per AISI S200 General Provisions Commentary Table D1-1.
8. Minimum required screw length is the lesser of ¾" or the minimum length required for the screw to extend through the steel connection a minimum of three exposed threads per 2004 AISI General Provisions Standard section D1.3.
9. Screw head or washer diameter, d_w, for #10 and #12 screws is 0.398".
10. The allowable load (ASD) values showing are not permitted to be increased for short duration loads such as wind or earthquake loads.
11. The lower of the pullover and pullout allowable load should be used for tension design.
12. The tabulated shear values are based on the thinner steel member in connection. Total steel thickness for the connection must be in the range of ½"–22 gauge.
13. Maximum grip length for the X34B1016 is 0.34". Maximum grip length for the XQ1S1016/X1S1016 is 0.54". Maximum grip length for the XQ1S1214/X1S1214 is 0.47". Grip length is the total connection thickness plus three protruding threads.
14. The XQ-S1224 screws are recommended for 16 gauge and thicker steel.

C-F-2023TECHSUP © 2023 Simpson Strong-Tie Company Inc.

Strong-Drive®
SELF-DRILLING X METAL Screw (cont.)

Load Tables and Technical Data (Model Numbers: XU34B1016, XU34S1016)

The following tables provide screw properties and load information for the Simpson Strong-Tie Self-Drilling XU Metal Screws (Model Numbers: XU34B1016-5K, XU34S1016.) The loads are based on testing in accordance with AISI S904-08, *Standard Test Methods* and AISI S905-08, *Test Methods for Mechanically Fastened Cold-Formed Steel Connections*. These values are provided for use in designing cold-formed steel connections.

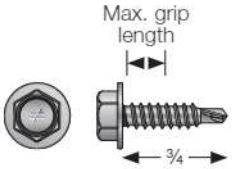

XU Metal Screw — Screw Properties and Strengths

Model No.		Coating	Size (TPI)	Length (in.)	Nom. Dia. (in.)	Washer Dia. (in.)	Point Size	Drill-Through Thickness[11] (in.)	Nominal Strength[1] (lb.)		Design Strength (LRFD[2]) (lb.), $\Phi = 0.5$		Allowable Strength (ASD[2]) (lb.), $\Omega = 3.0$	
Bulk (5,000 ct.)	Collated								P_{ss}	P_{ts}	ΦP_{ss}	ΦP_{ts}	P_{ss}/Ω	P_{ts}/Ω
XU34B1016-5K	XU34S1016	Clear Zinc	#10–16	¾	0.19	0.475	1	0.030-0.110	1,735	2,895	870	1,450	580	965

See footnotes below.

XU Metal Screw — Cold-Formed Steel Connection Loads

Model No.	Load Description	Reference Shear (lb.)						Reference Pullover (lb.)						Reference Pullout (lb.)					
		Steel Thickness: [mil (ga.)]						Steel Thickness: [mil (ga.)]						Steel Thickness: [mil (ga.)]					
		27	33	43	54	68	97	27	33	43	54	68	97	27	33	43	54	68	97
		(22)	(20)	(18)	(16)	(14)	(12)	(22)	(20)	(18)	(16)	(14)	(12)	(22)	(20)	(18)	(16)	(14)	(12)
XU34B1016-5K XU34S1016	ASD	255	290	480	—	—	—	435	530	640	—	—	—	100	125	155	210[9]	400[9]	—
	LRFD	410	465	765	—	—	—	690	845	1,025	—	—	—	160	200	250	320[9]	640[9]	—
	Nominal Strength	580	700	1,085	—	—	—	1,060	1,310	1,570	—	—	—	247	310	395	635[9]	985[9]	—

1. P_{ss} is the nominal shear strength of the screw and P_{ts} is the nominal tensile strength of the screw.
2. The safety factor Ω and resistance factor Φ are calculated based on AISI S100-07 Chapter F for tested connections.
3. The nominal strength values listed are achieved under laboratory conditions and should not be used for design loads.
4. Values are based on CFS members with a minimum yield strength of F_y = 33 ksi and tensile strength of F_u = 45 ksi for 43 mil (18 ga.) to 27 mil (22 ga.) and minimum yield strength of F_y = 50 ksi and F_u = 65 ksi for 54 mil (16 ga.) to 97 mil (12 ga.).
5. For design purposes, steel sheet thicknesses are 0.0283" for 27 mil, 0.0346" for 33 mil, 0.0451" for 43 mil, 0.0566" for 54 mil, 0.0713" for 68 mil, and 0.1017" for 97 mil. The actual sheet thickness shall not be less than 95% of these design thicknesses as specified in AISI S100-07 Section A2.4.
6. Screws must extend through the steel connection a minimum of 3 exposed threads per AISI General Provisions Standard Section D1.3.
7. Maximum grip length is 0.29". Grip length is the total connection thickness plus three protruding threads.
8. The lower of the pullover and pullout load should be used for tension design.
9. The tabulated values are based on the thinner steel member in the connection.
10. Pullout values for the XU34B1016 and XU34S1016 with 54 mil and 68 mil steel thicknesses are provided for conditions in which the member in contact with the screw head is thinner than the 54 or 68 mil base material and the total material thickness is less than the 0.110". Use the thickness of the member in contact with the screw head to determine pullover value and the base member thickness (member not in contact with screw head) to determine the pullout value.
11. The allowable load (ASD) values shown are not permitted to be increased for short-duration loads such as wind or earthquake loads.
12. Drill-through thickness is the recommended minimum and maximum thickness of the total assembly. This includes thickness of all the members, including the gaps between them.
13. Collated screw models are designed for use with the Quik Drive® system.

C-F-2023TECHSUP © 2023 Simpson Strong-Tie Company Inc.

Self-Drilling E Metal Screw

Common Application:

Cold-formed steel framing

- Recommended for use with certain Simpson Strong-Tie connectors
- #3 drill point (maximum total drilling thickness 0.35")

Codes/Standards: ASTM C1513 compliant

For more information, see p. 114, C-F-2023 *Fastening Systems* catalog

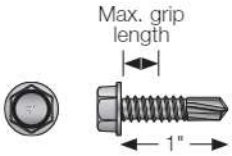

E Metal Screw — Strength Properties

Size-TPI x Length	Model No.	Nominal Strength (lb.)		Design Strength (LRFD) (lb.) $\phi = 0.5$		Allowable Strength (ASD) (lb.) $\Omega = 3.0$	
		P_{ss}	P_{ts}	ϕP_{ss}	ϕP_{ts}	P_{ss}/Ω	P_{ts}/Ω
#14-14 x 1	E1B1414	3,130	5,395	1,565	2,700	1,045	1,800

E Metal Screw — Cold-Formed Steel Connection Loads

Size-TPI x Length	Model No.	Nominal Dia. (in.)	Washer Dia. (in.)	Load Description	Reference Shear (lb.) Steel Thickness: [mil (ga.)]					Reference Pullover (lb.) Steel Thickness: [mil (ga.)]					Reference Pullout (lb.) Steel Thickness: [mil (ga.)]				
					33 (20)	43 (18)	54 (16)	68 (14)	97 (12)	33 (20)	43 (18)	54 (16)	68 (14)	97 (12)	33 (20)	43 (18)	54 (16)	68 (14)	97 (12)
#14-14 x 1	E1B1414	0.242	0.5	ASD	200	295	605	850	1,045	390	505	920	1,160	1,655	105	140	250	320	455
				LRFD	300	445	905	1,280	1,565	585	760	1,380	1,740	2,480	160	210	380	480	680
				Nominal strength	600	890	1,810	2,555	3,130	1,170	1,520	2,760	3,475	4,960	320	415	755	955	1,360

1. Screws shall extend through the connection with a minimum of three exposed threads per AISI General Provisions Standard Section D1.3.
2. Maximum grip length is 0.40". Grip length is the total connection thickness plus three protruding threads.
3. Tabulated loads are based on calculations per AISI S100 using the thinner steel member in the connection. A safety factor of $\Omega = 3.0$ and resistance factor $\phi = 0.5$ were used to determine the ASD and LRFD strength values. Steel thickness for both members must be in the range of 12–20 gauge.
4. Loads are based on cold-formed steel members with a minimum yield strength, F_y, of 33 ksi and tensile strength, F_u, of 45 ksi for 43 mil (18 ga.) and thinner, and a minimum yield strength of 50 ksi and tensile strength of 65 ksi for 54 mil (16 ga.) and thicker.

C-F-2023TECHSUP © 2023 Simpson Strong-Tie Company Inc.

Steel-Deck Fastening

Steel decks may be classified into roof decks, form decks and composite decks. The primary purpose of these decks is to support vertical loads, but they can also be used as a horizontal diaphragm to resist lateral loads from wind or earthquake forces. The strength of the diaphragm can be limited by fastener connection strength, local panel buckling, or even plate buckling of the entire diaphragm.

Steel-deck panels are available in different geometries and thicknesses and steel properties from different manufacturers. Common deck panel profiles are narrow rib (NR, commonly referred to as Type A deck), intermediate rib (IR, commonly referred to as Type F deck) and wide rib (WR, commonly referred to as Type B deck). Illustrations of these can be found in SDI publications. The SDI design recommendations are limited to deck panels that are in the thickness range of 0.014" to 0.064", and panel depths 9⁄16" to 3".

Steel-deck fastening is categorized into two groups — structural fastening and side-lap or stitch fastening. Structural fasteners connect the steel-deck panels to the structural framing, while side-lap fasteners connect the panels together along the free edges between the supports. The most important information for any steel-deck fastener is the connection strength and connection flexibility that is developed using the fastener.

Steel-Deck Fastening

Based on the deck profile, width and the design load, a structural fastening pattern and the number of side-lap fasteners or side-lap spacing can be determined. The fastening pattern provides the number of structural fasteners needed to attach the decking panel to support steel. The structural fastening pattern is given by the deck width followed by the number of fasteners. e.g., 36/7 pattern means 36"-wide panel attached with seven fasteners. The most typical fastener patterns for steel-deck profiles are shown here.

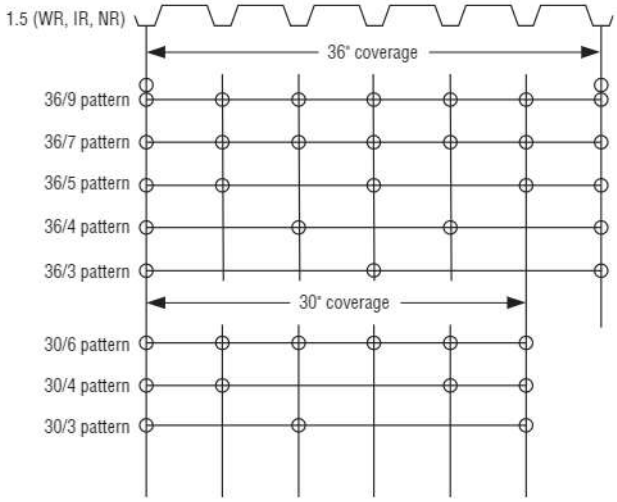

Typical Fastener Layout

The number of side-lap fasteners required at the over-lapping panel edges are per deck span between structural supports. For example, five side laps for a 6' deck span would represent six even spaces with side-lap fasteners at 12" on center. The side-lap fastener spacing can range between 3" and 36" o.c.

Structural fastening can be done with puddle welds, power-actuated pins, or screws. Each type of fastening has its advantages and disadvantages in terms of installation cost, installation effort, capacity, energy dissipation and behavior at ultimate load. All of the fasteners would be called out in a fastener pattern using nomenclature similar to that shown in the figure.

Evaluation Reports and Approvals

Steel-deck diaphragms can be designed and constructed following code-recognized design procedures and provisions. At the same time, the codes provide for alternate design methods and materials to be recognized by the authority having jurisdiction. Some deck and fastener manufacturers have gone the alternate route and in that process have secured evaluation reports that can be used by the engineering design community for design of steel diaphragms and by the local building officials as the basis for approval. ICC-ES and IAPMO UES provide criteria that can be used to secure evaluation reports for steel-diaphragm products.

The insurance industry also has a form of compliance that it uses as the basis for risk management. Factory Mutual (FM) provides an Approval for deck products and systems as well as fasteners used for fastening the deck panels.

Simpson Strong-Tie Steel-Deck Fasteners

Simpson Strong-Tie holds evaluation reports and FM Approvals for all of its steel-deck diaphragm fasteners. These reports and approvals are available online at no cost from the issuing agency or at **strongtie.com**.

The Simpson Strong-Tie self-tapping X metal screws have been qualified for compliance with ASTM C1513 and some of these screws are included in the SDI DDM03, Appendix VII and Appendix IX, and SDI DDM04, Section 12. In those documents, diaphragm design values are provided in tabular format for typical fastening patterns and for a range of common deck thicknesses. The SDI DDM03 and DDM04 manuals are code-referenced documents.

In addition, the strength and flexibility of connections with Simpson Strong-Tie X-series screws used in steel decks were evaluated per IAPMO UES Evaluation Criteria EC007 (2021), which is based on AISI S310, North American Standard for the Design of Profiled Steel Panels. The connection strengths and flexibilities can be used to calculate the nominal diaphragm shear strength and diaphragm stiffness per Sections 2 and 3 of SDI DDM03.

The Simpson Strong-Tie steel-deck diaphragm calculator, which is available as a web app, can be used to do the diaphragm strength and stiffness calculations, investigate alternative fastening strategies and ultimately produce the required submission documents.

The available Simpson Strong-Tie fasteners for steel-deck applications are listed on pp. 111–114 and 240–242 of C-F-2023 *Fastening Systems* catalog. They are available in bulk or collated forms. The collated forms are driven using Quik Drive® Systems. For more up-to-date information on steel-deck diaphragm fasteners, evaluation reports, approvals and appropriate Quik Drive tools including some products not found in the print catalog, see **strongtie.com**.

C-F-2023TECHSUP © 2023 Simpson Strong-Tie Company Inc.

Steel-Deck Diaphragm Calculator

The Steel-Deck Diaphragm Calculator web app offers optimized steel-deck design solutions based on fastener and labor costs for a given shear and uplift. It can provide calculations for any solution generated. Generate diaphragm tables for various roof and floor decks using Simpson Strong-Tie fasteners. The app can also generate a submittal package that includes fastener information, code reports, factory mutual reports, Appendices VII and IX of SDI DDM03 and DDM04, coating information and tools for installation. The app is accessible from any web browser and does not require downloading or installing special software.

Users can:

- Design for multiple zones and develop solutions in either ASD or LRFD
- Modify deck properties from the standard properties listed in SDI DDM03 and DDM04
- Generate multiple cost- and labor-optimized solutions with calculations included
- Generate tables in Nominal, ASD Wind, LRFD Wind, ASD Seismic or LRFD Seismic
- Design for loads using the new Strong-Drive® XL Large-Head Metal screw (included in the optimization calculator)
- Design for additional structural patterns not covered in SDI literature
- Access proprietary deck tables with the Strong-Drive XM Medium-Head Metal screw

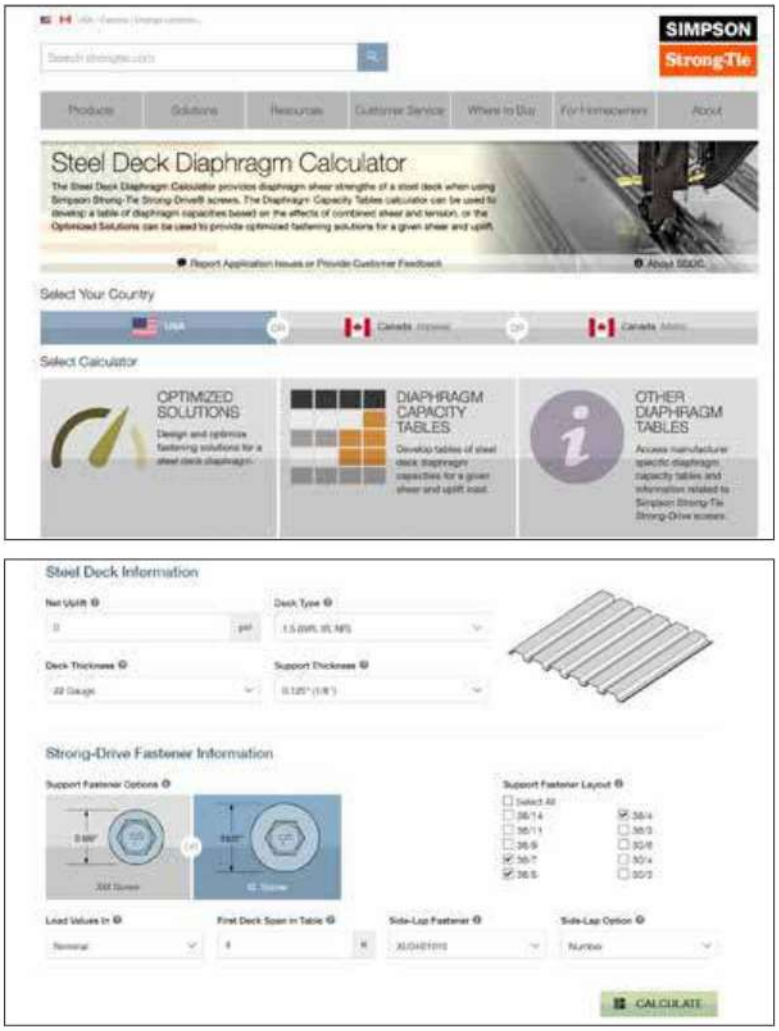

Example of Steel-Deck Diaphragm Calculator Web Application

Steel-Deck Diaphragm Load Tables for Interlocking Decks

Load tables are available on our website application for using Strong-Drive XM Medium-Head Metal screws on frequently used interlocking decks with proprietary side-lap connections.

For more information regarding Strong-Drive XM Medium-Head Metal screw shear tables, refer to **strongtie.com/diaphragmcalc**.

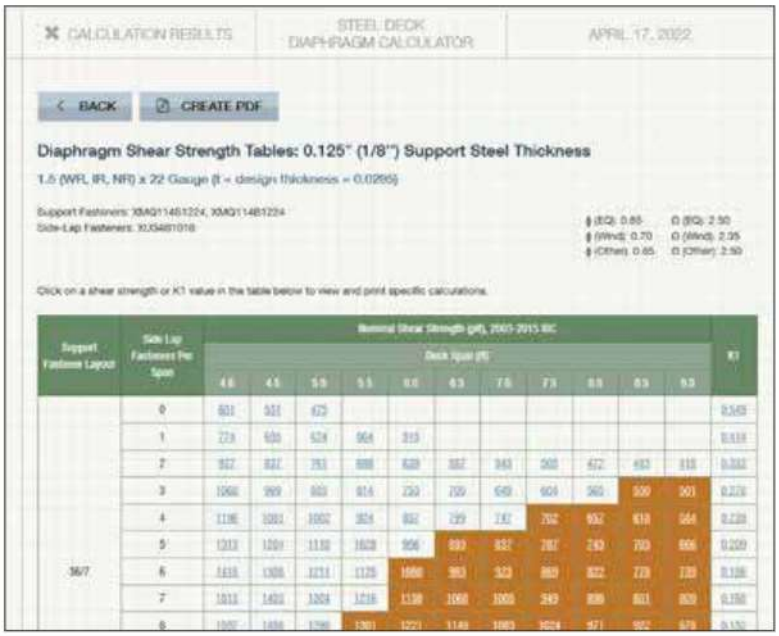

Example of Steel-Deck Diaphragm Load Table for Interlocking Decks

C-F-2023TECHSUP © 2023 Simpson Strong-Tie Company Inc.

Strong-Drive® XL LARGE-HEAD and XM MEDIUM-HEAD METAL Screws

High-Performance Screw Alternative to Welds and Pins

Strong-Drive metal screws are load-tested and code-listed, allowing you to get the maximum load values for installation. Strong-Drive XL Large-Head Metal screws are the perfect choice when high shear or uplift resistance is required. Strong-Drive XM Medium-Head Metal screws, with their ½" washer head, are designed for narrow flutes commonly found on interlocking deck profiles. In high-strength decks (F_y= 50 ksi), these screws are excellent 1-for-1 replacements for pins. These screws are available in bulk or collated for Quik Drive® steel-decking systems.

Simpson Strong-Tie provides a full offering of code-listed fasteners for your next steel-decking job.

US Patent 9,518,599

For more information, see pp. 111–112, C-F-2023 *Fastening Systems* catalog

DDM03 APPENDIX VII, IX DDM04

IAPMO UES ER-326

FM APPROVAL #3050714, #3045651

City of L.A. RR26009

State of Florida FL16937

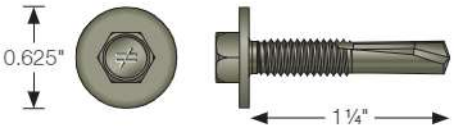

Strong-Drive XL Large-Head Metal Screw

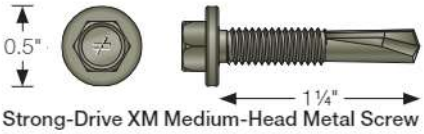

Strong-Drive XM Medium-Head Metal Screw

Strength in Numbers

Comparison testing shows that Strong-Drive XL Large-Head Metal screws and Strong-Drive XM Medium-Head Metal screws are stronger than many alternative fastener types in 33 ksi and 50 ksi steel decking.

For Standard SDI DDM03 and DDM04 Decks with F_y = 33 ksi

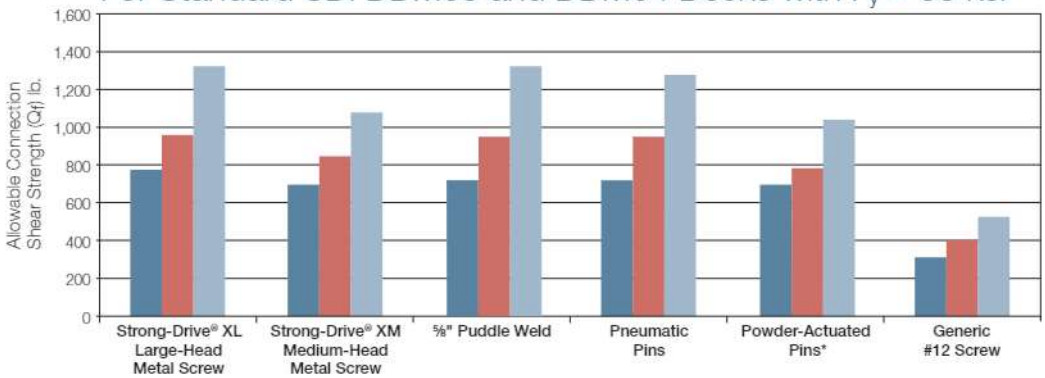

Wind Load

- 22 ga. deck
- 20 ga. deck
- 18 ga. deck

- Standard screw based on AISI Eq.
- PAF values based on SDI DDM03 and DDM04 Manuals
- Values based on ¼" support thickness
- Safety factors per DDM03 and DDM04

*Average

Fastener Type

For Proprietary Steel Decks with F_y = 50 ksi

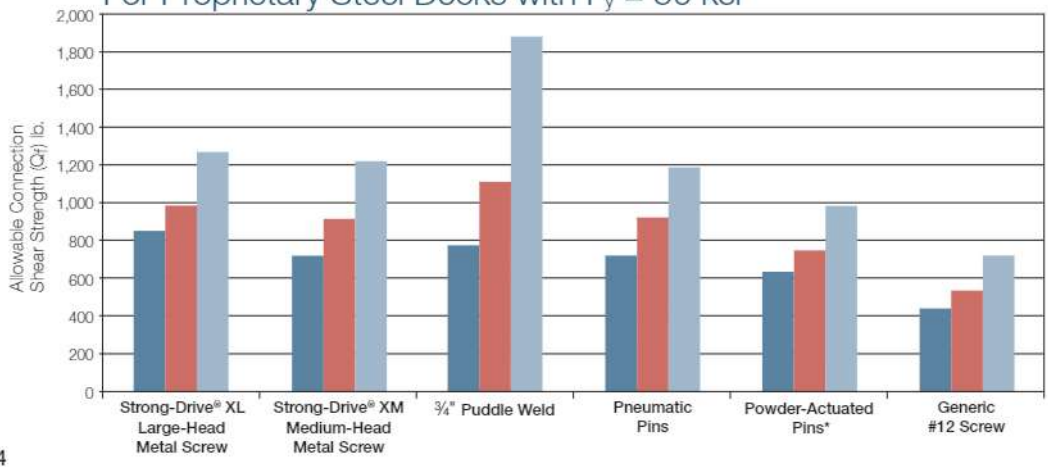

Seismic Load

- 22 ga. deck
- 20 ga. deck
- 18 ga. deck

- Standard screw based on AISI Eq.
- PAF values based on SDI DDM03 and DDM04 Manuals
- Values based on ¼" support thickness
- Safety factors per DDM03 and DDM04

*Average

C-F-2023TECHSUP © 2023 Simpson Strong-Tie Company Inc.

Strong-Drive® XL LARGE-HEAD and XM MEDIUM-HEAD METAL Screws (cont.)

Screw Shear and Tension Strengths

Size-TPI x Length	Model (Model No.)	Factor	Support Thickness (in.)	Nominal Shear (lb.) P_{ss}	Nominal Tension (lb.) P_{ts}	Reference Connection Shear Strength, Qf (lb.), and Flexibility, Sf (in./kip) GR33 / GR40 Deck Thickness, ga. (in.) 22 (0.0295)	20 (0.0358)	18 (0.0474)	16 (0.0598)	GR50 Deck Thickness, ga. (in.) 22 (0.0295)	20 (0.0358)	18 (0.0474)	16 (0.0598)
#12-24 x 1¼	XL Large-Head Metal Screw (XLQ114T1224, XLQ114B1224)	Qf	0.375	3,110	4,985	1,985	2,410	3,110	—	2,030	2,465	3,110	3,110
			0.25			1,870	2,270	3,005	3,110	2,465	2,465	3,110	3,110
			0.1875			1,790	2,170	2,875	3,110	1,945	2,360	3,110	3,110
			0.125			1,685	2,045	2,705	3,110	1,830	2,220	2,940	3,110
		Sf	0.125–0.375			0.0076	0.0069	0.006	0.0053	0.0076	0.0069	0.006	0.0053
#12-24 x 1¼	XM Medium-Head Metal Screw (XMQ114S1224, XMQ114B1224)	Qf	0.375			1,565	1,895	2,510	3,110	1,780	2,200	2,995	3,110
			0.25			1,565	1,895	2,510	3,110	1,780	2,200	2,995	3,110
			0.1875			1,215	1,625	2,475	3,110	1,655	2,050	2,790	3,110
			0.125			1,215	1,625	2,475	3,110	1,495	1,850	2,520	3,110
		Sf	0.125–0.375			0.0076	0.0069	0.006	0.0053	0.0076	0.0069	0.006	0.0053

1. P_{ss} and P_{ts} are nominal shear strength and nominal tension strength for the screw itself, respectively, and are the average (ultimate) value of all tests determined by independent laboratory testing.
2. The ASD and LRFD loads for tension are calculated using a safety factor Ω of 3.0 and the resistance factor ϕ of 0.5, respectively.
3. For tension connection: the smallest of the screw tension strength, pullover strength and pullout strength shall be used for design.

Structural Screw Pullover Strength with Steel Minimum Yield Strength F_y = 33 ksi

Size-TPI x Length	Model (Model No.)	Design Basis	Reference Pullover Loads (lb.) GR33 Deck Thickness, ga. (in.) 22 (0.0295)	20 (0.0358)	18 (0.0474)	16 (0.0598)	GR40 / GR50 Deck Thickness, ga. (in.) 22 (0.0295)	20 (0.0358)	18 (0.0474)	16 (0.0598)
#12-24 x 1¼	XL Large-Head Metal Screw[2] (XLQ114T1224, XLQ114B1224)	Nominal	1,295	1,705	2,490	2,775	1,575	1,990	2,820	3,075
		LRFD	840	1,100	1,625	1,810	1,020	1,285	1,840	2,005
		ASD	525	690	1,015	1,135	635	800	1,150	1,255
#12-24 x 1¼	XM Medium-Head Metal Screw[2] (XLM114S1224, XLM114B1224)	Nominal	750	1,020	1,400	1,930	910	1,190	1,590	2,135
		LRFD	485	655	915	1,260	595	775	1,035	1,395
		ASD	305	415	570	790	370	485	650	870

1. Values are based on steel members with a minimum yield strength of F_y = 33 ksi and tensile strength of F_u = 45 ksi.
2. The values for 16 ga., 18 ga., 20 ga. and 22 ga. are based on tests per AISI Standard Test Method S905.
3. The safety factor Ω and resistance factor Φ used to determine the ASD and LRFD strengths are based on AISI S100.
4. The values for 16 ga., 18 ga., 20 ga. and 22 ga. are based on the calculations per AISI S100.
5. For tension connection: the smallest of the screw tension strength, pullover strength and pullout strength shall be used for design.

Structural Screw Pullout Strength

Size-TPI x Length	Model (Model No.)	Design Basis	Reference Pullout Loads (lb.) Support Thickness ⅛"	3/16"	¼"	⅜"
#12-24 x 1¼	XL Large-Head Metal Screw (XLQ114T1224, XLQ114B1224) XM Medium-Head Metal Screw (XMQ114S1224, XMQ114B1224)	Minimum Tensile Strength of Steel, F_u = 65 ksi				
		Nominal	1,490	2,240	2,985	4,475
		LRFD	745	1,120	1,490	2,240
		ASD	495	745	995	1,490
		Minimum Tensile Strength of Steel, F_u = 50 ksi				
		Nominal	1,150	1,720	2,295	3,445
		LRFD	575	860	1,150	1,720
		ASD	385	575	765	1,150

1. Values are based on calculations per AISI S100.
2. The tabulated ASD and LRFD loads are based upon a safety factor Ω of 3.0 and the resistance factor ϕ of 0.5.
3. For tension connection: the smallest of the screw tension strength, pullover strength and pullout strength shall be used for design.

For more information regarding these tables, please refer to IAPMO UES ER-326.

C-F-2023TECHSUP © 2023 Simpson Strong-Tie Company Inc.

Simpson Strong-Tie Limited Warranty

Effective Date: March 18, 2021

This Limited Warranty applies to all Simpson Strong-Tie products ("Products") purchased after the Effective Date while this Limited Warranty remains in effect, other than those Simpson Strong-Tie products that have a separate Limited Warranty applicable to such products. For purchases after the Effective Date, please consult strongtie.com/limited-warranties, as this Limited Warranty may be updated by Simpson from time to time. All future purchases of Products are subject to the terms of the Limited Warranty in effect as of the purchase date.

This Limited Warranty must be read in conjunction with all applicable General Notes, General Instructions for the Installer, General Instructions for the Designer, Building Codes, Corrosion Information, and Terms & Conditions of Sale, along with any other information or specifications published by Simpson Strong-Tie Company Inc. ("Simpson") or available on the strongtie.com website ("Website") or on the product package, label or product manual. All of this information is referred to collectively as the "Simpson Strong-Tie Documentation." All applicable Simpson Documentation must be carefully reviewed each time any Product is used.

Simpson Strong-Tie warrants, to the original purchaser only, that each Product will be free from substantial defects in materials, manufacturing and design if properly specified, installed, and maintained, and when used in accordance with the design limits and the structural, technical, and environmental specifications in the Simpson Strong-Tie Documentation. This Limited Warranty is void and does not apply to any (a) Product purchased from an unauthorized dealer, retailer or distributor, (b) Product deterioration or damage due to environmental conditions or inadequate or improper handling, transportation, storage or maintenance, (c) cosmetic defects, including discoloration, (d) failure or damage caused by improper installation, application, mixing or preparation, (e) use of a Product in temperatures or environmental conditions outside the ranges specified for such Product in the Simpson Strong-Tie Documentation, (f) use of a Product outside of its shelf-life specifications, (g) normal wear and tear, (h) failure or damage caused by the use of a Product with any fasteners, pins, screwstrips, products or accessories other than authentic Simpson Strong-Tie products, (i) Product that was subjected to negligence or excessive or improper use, including any use not in accordance with the Simpson Strong-Tie Documentation, (j) failure or damage caused by the building site, foundation, or any third-party products, building materials or components, (k) failure or damage caused by use of a Product in a structure that has a design or other defect or that does not comply with all applicable building codes, laws, rules and regulations, (l) modified Product, or any nonstandard use or application of a Product, (m) failure or damage caused by corrosion, termites or other wood destroying organisms, animal or insect activity, wood fungal decay, rot, mold, mildew, exposure to chemicals or other hazardous substances, a corrosive environment or materials, inadequate moisture protection, or premature deterioration of building materials, (n) failure or damage caused by an act of God, including any hurricane, earthquake, tornado, lightning, ice, snow, high wind, flood or other severe weather or natural phenomena, (o) installation services or workmanship, including any failure or damage caused by installation of any Product, whether or not in accordance with the Simpson Strong-Tie Documentation, or (p) failure or damage caused by the gross negligence, willful misconduct, or other acts or omissions of the builder, general contractor, installer or any third party, including the building owner. Notwithstanding the foregoing, Simpson Strong-Tie disclaims and does not provide any warranty related to the design of any custom-order or non-catalog Product.

Although Products are designed for a wide variety of uses, Simpson Strong-Tie assumes no liability for confirming that any Product is appropriate for an intended use, and each intended use of a Product must be reviewed and approved by qualified professionals. Each Product is designed for the load capacities and uses listed in the Simpson Strong-Tie Documentation, subject to the limitations and other information set forth in the Simpson Strong-Tie Documentation.

Due to the particular characteristics of potential impact events such as earthquakes and high velocity winds, the specific design and location of the structure, the building materials used, the quality of construction, or the condition of the soils or substrates involved, damage may nonetheless result to a structure and its contents even if the loads resulting from the impact event do not exceed Simpson Strong-Tie's specifications and the Products are properly installed in accordance with applicable building codes, laws, rules and regulations.

Product demonstrations, training, operator examinations, technical and customer support and other services provided by Simpson Strong-Tie are based on Simpson Strong-Tie's present knowledge and experience, are conducted for illustrative or instructive purposes only, do not constitute a warranty of Product capabilities, specifications or installation and do not modify the applicable Limited Warranty for Products set forth herein. Any services provided by Simpson Strong-Tie are provided without any representation or warranty of any kind, and Simpson Strong-Tie assumes no liability for any representations or statements made as part of such Product demonstrations, training, operator examinations or other services. In the event of any inconsistency between any information provided during any such demonstration or service, and the information in any applicable Simpson Strong-Tie Documentation, the information in the Simpson Strong-Tie Documentation shall govern. In the event of any inconsistency between any information provided on the Website, and the information in any other Simpson Strong-Tie Documentation, the information on the Website shall govern.

ALL WARRANTY OBLIGATIONS OF SIMPSON STRONG-TIE SHALL BE LIMITED, AT SIMPSON STRONG-TIE'S ABSOLUTE DISCRETION, TO EITHER REPAIRING THE DEFECTIVE PRODUCT OR PROVIDING A REPLACEMENT FOR THE DEFECTIVE PRODUCT. THIS REMEDY CONSTITUTES SIMPSON STRONG-TIE'S SOLE OBLIGATION AND LIABILITY AND THE SOLE AND EXCLUSIVE REMEDY OF PURCHASER AND, WITHOUT LIMITING THE GENERALITY OF THE FOREGOING, EXCLUDES ANY LABOR OR OTHER COSTS INCURRED

C-F-2023TECHSUP © 2023 Simpson Strong-Tie Company Inc.

Simpson Strong-Tie Limited Warranty

IN CONNECTION WITH A WARRANTY CLAIM. PURCHASER ASSUMES ALL RISK AND LIABILITY ASSOCIATED WITH ANY USE OF THE PRODUCT, INCLUDING BUT NOT LIMITED TO SUITABILITY FOR ITS INTENDED USE.

THE LIMITED WARRANTY HEREIN IS EXPRESSLY IN LIEU OF ALL OTHER WARRANTIES, AND, WHERE LAWFUL, SIMPSON STRONG-TIE DISCLAIMS ALL OTHER WARRANTIES, INCLUDING BUT NOT LIMITED TO IMPLIED WARRANTIES OF MERCHANTABILITY AND FITNESS FOR A PARTICULAR PURPOSE AND WARRANTIES ARISING FROM COURSE OF PERFORMANCE, COURSE OF DEALING OR TRADE USAGE. IN NO EVENT WILL SIMPSON STRONG-TIE BE LIABLE FOR INCIDENTAL, CONSEQUENTIAL, PUNITIVE OR SPECIAL DAMAGES OR DIRECT OR INDIRECT LOSS OF ANY KIND, INCLUDING BUT NOT LIMITED TO PROPERTY DAMAGE, DEATH AND PERSONAL INJURY. SIMPSON STRONG-TIE'S ENTIRE LIABILITY IS LIMITED TO THE PURCHASE PRICE OF THE DEFECTIVE PRODUCT. SOME STATES DO NOT ALLOW LIMITATIONS ON HOW LONG AN IMPLIED WARRANTY LASTS, OR THE EXCLUSION OR LIMITATION OF INCIDENTAL OR CONSEQUENTIAL DAMAGES, SO THE ABOVE LIMITATION OR EXCLUSION MAY NOT APPLY TO YOU. THIS WARRANTY GIVES YOU SPECIFIC LEGAL RIGHTS, AND YOU MAY ALSO HAVE OTHER RIGHTS WHICH VARY FROM STATE TO STATE.

To obtain warranty service, you must contact Simpson Strong-Tie promptly at (800) 999-5099 or at Simpson Strong-Tie Company Inc., 5956 West Las Positas Boulevard, Pleasanton, CA 94588, regarding any potential claim, no later than sixty (60) days after you discover the potential claim. Upon request by Simpson Strong-Tie, you must provide Simpson Strong-Tie with: (a) proof of purchase and written records evidencing, in reasonable detail, the date and manner of installation, application, mixing and preparation of the Products, as applicable, (b) a reasonable opportunity to inspect the site where the Product was installed, and (c) samples of the Products from the actual installation in sufficient quantities in order for Simpson Strong-Tie to perform testing to determine whether or not the Product failed as set forth herein. Simpson Strong-Tie may, in its absolute discretion, request that you return the allegedly defective Products to Simpson Strong-Tie, in which case Simpson Strong-Tie will issue a Return Materials Authorization (RMA), which must be completed and returned to Simpson Strong-Tie with the Product. Simpson Strong-Tie is not responsible for any costs or expenses incurred in connection with any inspection (other than by Simpson Strong-Tie employees) or in connection with the return of Products to Simpson Strong-Tie, but Simpson Strong-Tie shall bear all costs and expenses incurred in connection with the shipment of replacement Products in the event that Simpson Strong-Tie determines that the Product should be replaced in accordance with this Limited Warranty. If Simpson Strong-Tie elects to repair or replace the Product, Simpson Strong-Tie shall have a reasonable time to do so.

No one is authorized to change or add to this Limited Warranty. If at any time Simpson Strong-Tie does not enforce any of the terms, conditions or limitations stated in this Limited Warranty, Simpson Strong-Tie shall not have waived the benefit of said term, condition or limitation and can enforce it at any time. This Limited Warranty is extended only to the original purchaser and is not transferrable. It is not intended nor shall it be construed to create rights in any third party.

C-F-2023TECHSUP © 2023 Simpson Strong-Tie Company Inc.

Notes

C-F-2023TECHSUP © 2023 Simpson Strong-Tie Company Inc.

Notes

C-F-2023TECHSUP © 2023 Simpson Strong-Tie Company Inc.

Notes

C-F-2023TECHSUP © 2023 Simpson Strong-Tie Company Inc.

Notes

C-F-2023TECHSUP © 2023 Simpson Strong-Tie Company Inc.

Strength is built into every spec.

SIMPSON Strong-Tie®

When it comes to fasteners, Simpson Strong-Tie is the only name you need to know. Our professional-grade fastening solutions are the best in the business. From high-performance Strong-Drive® and Deck-Drive™ screws and nails, to efficient Quik Drive® auto-feed screw driving systems, to fasteners made to resist corrosion — all of our products are precision engineered for strength, versatility and reliability. Use our Fastener Finder app to select screws and nails, then quickly get the products you need from our nationwide network of suppliers. Spec your next project with innovative, code-listed solutions from Simpson Strong-Tie. There's no better way to build strong.

Simpson Strong-Tie | strongtie.com

Strong-Drive®

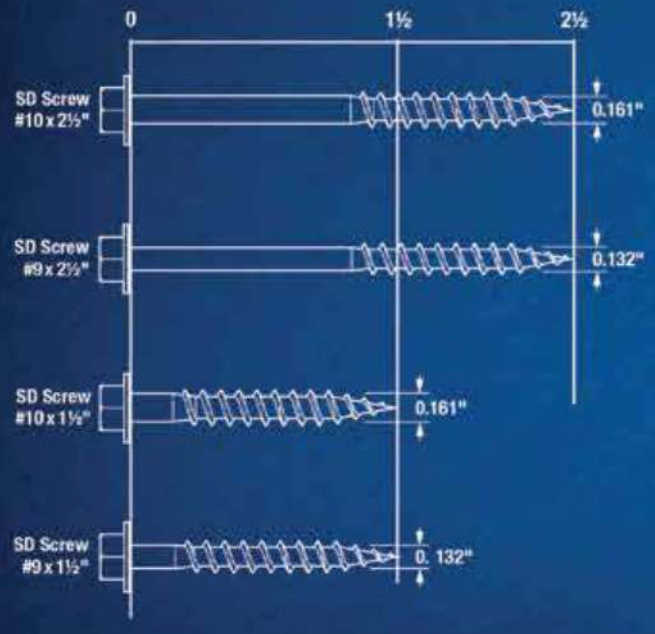

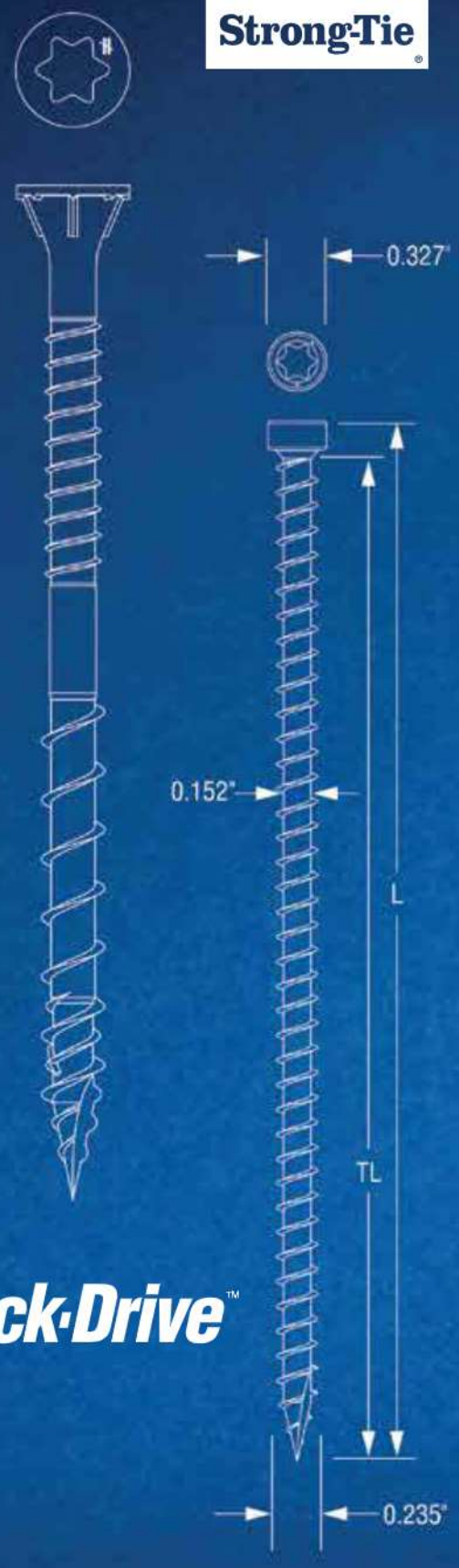

Deck-Drive™

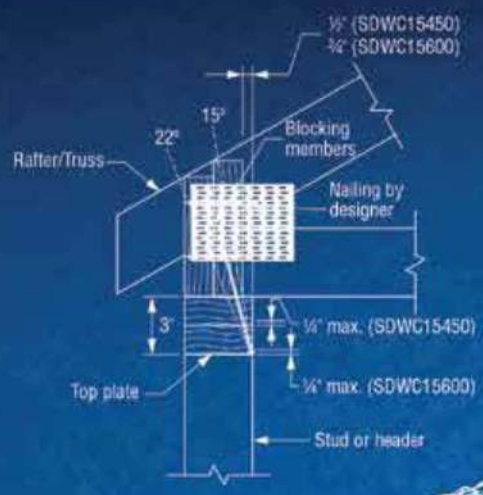

QuikDrive®

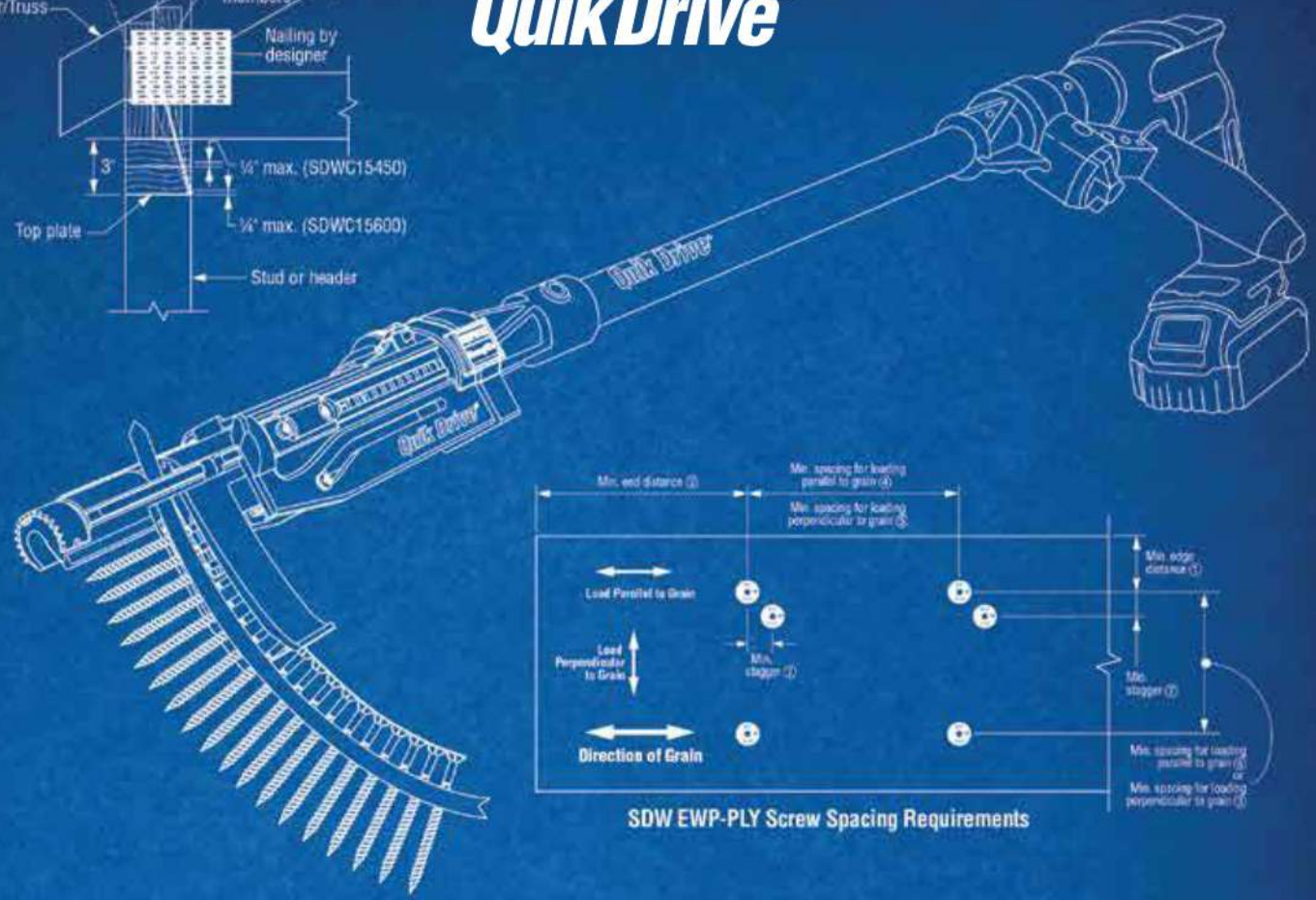

SDW EWP-PLY Screw Spacing Requirements

Stainless·Steel

US Patent
9,523,383

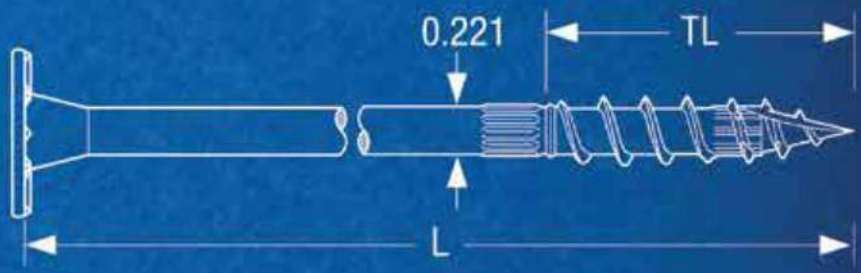

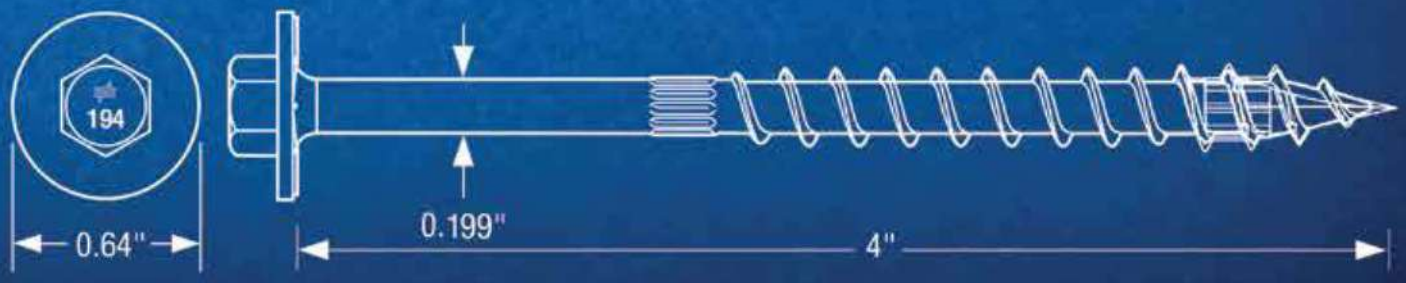

Imagine any building project. Now imagine having exactly the fastening solution you need to build it. From load-rated structural screws to fasteners for everyday applications, our wide breadth of innovative, versatile Simpson Strong-Tie fastening solutions helps everyone from contractors to engineers to DIYers build stronger, faster and smarter.

You keep dreaming. We'll keep innovating.

Versatility at every dimension.

C-F-2023TECHSUP Effective 1/1/2023 Expires 12/31/2024
© 2023 Simpson Strong-Tie Company Inc.