QUALITY LIGHT STEEL FRAMING CONNECTIONS AND MEMBERS

LIGHT STEEL FRAMING MEMBERS

LOAD BEARING STUDS · CURTAIN WALL STUDS · JOIST

The Steel Network

STEELNETWORK.COM
1.888.474.4876

600S162-54

Member Depth:
(Example: 6" = 600 x 1/100 inches)
All member depths are taken in 1/100 inches.
For all "T" sections, member depth is inside to inside dimension.

Material Thickness:
(Example: 0.054 in. = 54 mils; 1 mil = 1/1000 in.)
Material thickness is the minimum base metal thickness in mils. Minimum base metal thickness represents 95% of the design thickness.

Flange Width:
(Example: 1 5/8" = 1.625" ≈ 162 x 1/100 inches)
All flange widths are taken in 1/100 inches.

Style:
(Example: Stud or Joist section = S)
The four alpha characters utilized by the designator system are:
S = Stud or Joist Sections
T = Track Sections
U = Channel Sections
F = Furring Channel Sections

Table of Contents

General Information & Definitions....2-3

Section Properties - Non-Structural Studs....4
- Structural Studs....5-10
- Track....11-14

Limiting Wall Heights - Interior Non-Structural Non-Composite....15-16
- Curtain Wall 1-span....17-19
- Curtain Wall 2-span....20-22

Combined Axial & Lateral Load - Tables....23-28

Floor Joist Span Tables - 10 psf Dead Load and 20 psf Live Load....29-30
- 10 psf Dead Load and 30 psf Live Load....31-32
- 10 psf Dead Load and 40 psf Live Load....33-34
- 10 psf Dead Load and 50 psf Live Load....35-36
- 15 psf Dead Load and 125 psf Live Load....37-38
- 40 psf Dead Load and 125 psf Live Load....39-40

Header Load Tables - Allowable Uniform Loads....41-43

Web Crippling Load - Conditions....44
- Tables: Single Members....45-46
- Tables: Back-to-Back Members....47-48

Ceiling Span Tables....49-50

Typical Ceiling Details - Midspan Bracing Details....51

Channel Properties - U-Channel....51
- Furring Channel (Hat Channel)....52

Fasteners - Screws & Welds....53

Terms, Conditions, and Limited Warranty....54

General Notes for All Tables

1. The values in this catalog are based on the 2007 edition of North American Specification for the Design of Cold-Formed Steel Structural Members, AISI S100-07 as referenced by 2009 International Building Code (IBC) and AISI S100-07 with supplement S2-10 as referenced by 2012 IBC.
2. Where AISI S100 is referenced, it is the North American Specification for the Design of Cold-Formed Steel Structural Members, S100-07 and AISI S100-07 with Supplement S2-10, as applicable with U.S. provisions.
3. The structural properties included in this catalog have been computed based on allowable strength design (ASD) method.
4. Distortional buckling calculations are based on $K_\phi = 0$.
5. The effective moment of inertia for deflection is calculated at a stress that results in a section modulus such that the stress times the section modulus at that stress is equal to the allowable moment. AISI S100 Procedure I for serviceability determination has been used.
6. Various sections may be manufactured with yield points of 33 or 50 kips per square inch (ksi). The yield point used for calculations is indicated in the tables.
7. For sections available in both 33 and 50 ksi, the specifier must clearly indicate which yield point is required. For example: 362S162-54 (50 ksi).
8. Conditions with loads that exceed the 10 psf limit for nonstructural members require an approved CP60 coating.
9. S Sections with 350 flanges will be substituted with TSN's JamStud® section with 350 flanges and an extra stiffening lip. Refer to TSN's Exterior Wall Catalog for JamStud dimensions and section properties.
10. When provided, factory punchouts will be located along the center line of the webs of the stud members and will have a minimum center-to-center spacing of 24". Punchouts for members less than 2 ½" deep are a maximum of 1 ½" wide x 4 ½" long. Members with depths 2 ½" and smaller are maximum ¾" wide x 4 ½" long. Any configuration or combination of holes that fit within the punchout width and length limitations mentioned above shall be permitted; other punchout configurations and locations not in compliance with limitations listed above must be approved by a design professional. Values in this catalog are based on punchout configuration and location as illustrated below:

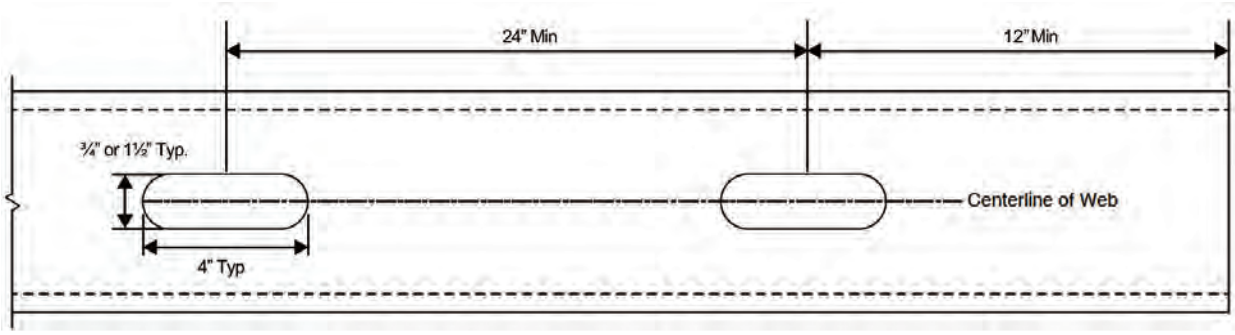

Thickness Table				
Designation Thickness (mils)	Minimum Thickness[1] (in)	Design Thickness[1] (in)	Design Inside Corner (Radii[2] (in))	Reference Only Gauge No.
18	0.0179	0.0188	0.0844	25
27	0.0269	0.0283	0.0796	22
30	0.0296	0.0312	0.0782	20 - Drywall
33	0.0329	0.0346	0.0765	20 - Structural
43	0.0428	0.0451	0.0712	18
54	0.0538	0.0566	0.0849	16
68	0.0677	0.0713	0.1070	14
97	0.0966	0.1017	0.1526	12
118	0.1180	0.1242	0.1863	10

Design Stiffening Lip Length		
Section	Flange Width	Design Stiffening Lip Length (in)
S125	1 ¼"	0.188
S137	1 ⅜"	0.375
S162	1 ⅝"	0.500
S200	2"	0.625
S250	2 ½"	0.625
S300	3"	0.625
S350	3 ½"	1.000

[1] Minimum thickness represents 95% of the design thickness and is the minimum acceptable thickness delivered to the job site based on Section A2.4 of AISI S100-07.

[2] The tables in this catalog are calculated based on inside corner radii listed in this table. The inside corner radius is the maximum of 3/32 - t/2 or 1.5t, truncated after the fourth decimal place (t = design thickness.) Centerline bend radius is calculated by adding half of the design thickness to listed corner radius.

Material Specifications

Structural and nonstructural members are coated to meet the minimum code requirements. Higher corrosion protection coatings such as G90 are available upon request. Products manufactured by TSN are cold-formed from corrosion protected steel coils or sheets and meet the following specifications requirements:

Product Type	Material Specification	Min Yield	Min Tensile	Min Metallic Coating Designation
Nonstructural Products ASTM C645	ASTM A653, SS Grade 33	33 ksi	45 ksi	G40[1]
	ASTM A1003, Grade 33 (NS33)	33 ksi	- [A]	G40[1], A40[1], AZ50[2], GF30[3], T1-25[4], T2-100[4], 60G/60G[5]
Structural Products ASTM C955	ASTM A653, SS Grade 33	33 ksi	45 ksi	G60[1], A60[1]
	ASTM A653, SS Grade 50 Class 1	50 ksi	65 ksi	G60[1], A60[1]
	ASTM A1003, Grade 33 Type H (ST33H)	33 ksi	45 ksi	G60[1], A60[1], AZ50[2], GF30[3]
	ASTM A1003, Grade 50 Type H (ST50H)	50 ksi	65 ksi	G60[1], A60[1], AZ50[2], GF30[3]

[1] A653 Standard for steel sheet, zinc coated (galvanized) or zinc-iron alloy-coated (galvannealed) by the hot-dip process
[2] A792 Standard for steel sheet, 55% aluminum-zinc alloy-coated by the hot-dip process
[3] A875 Standard for steel sheet, zinc-5% aluminum alloy-coated by the hot-dip process
[4] A463 Standard for steel sheet, aluminum coated by the hot-dip process
[5] A879 Standard for steel sheet, zinc coated by the electrolytic process for application requiring designation of the coating mass on each surface
[A] No tensile requirements for NS steels

Web Depth-to-Thickness Ratios for Stud and Joist Members[2 3 4]																			
Mil Thickness →		18 mil		27 mil		30 mil		33 mil		43 mil		54 mil		68 mil		97 mil		118 mil	
Design Thickness →		0.0188 in.		0.0283 in.		0.0312 in.		0.0346 in.		0.0451 in.		0.0566 in.		0.0713 in.		0.1017 in.		0.1242 in.	
Inside Bend Radius →		0.0844 in.		0.0796 in.		0.0782 in.		0.0765 in.		0.0712 in.		0.0849 in.		0.1070 in.		0.1526 in.		0.1863 in.	
Style	Depth (in)	h (in)	h/t	h (in)	h/t	h (in)	h/t	h (in)	h/t	h (in)	h/t	h (in)	h/t	h (in)	h/t	h (in)	h/t	h (in)	h/t
162S	1.625	1.419	75	1.409	50	1.406	45	1.403	41	1.392	31	1.342	24	1.269	18	1.117	11	1.004	8
250S	2.5	2.294	122	2.284	81	2.281	73	2.278	66	2.267	50	2.217	39	2.144	30	1.992	20	1.879	15
350S	3.5	3.294	175	3.284	116	3.281	105	3.278	95	3.267	72	3.217	57	3.144	44	2.992	29	2.879	23
362S	3.625	3.419	182	3.409	120	3.406	109	3.403	98	3.392	75	3.342	59	3.269	46	3.117	31	3.004	24
400S	4	3.794	202[1]	3.784	134	3.781	121	3.778	109	3.767	84	3.717	66	3.644	51	3.492	34	3.379	27
550S	5.5	5.294	-	5.284	187	5.281	169	5.278	153	5.267	117	5.217	92	5.144	72	4.992	49	4.879	39
600S	6	5.794	-	5.784	204[1]	5.781	185	5.778	167	5.767	128	5.717	101	5.644	79	5.492	54	5.379	43
800S	8	7.794	-	7.784	-	7.781	249[1]	7.778	225[1]	7.767	172	7.717	136	7.644	107	7.492	74	7.379	59
1000S	10	9.794	-	9.784	-	9.781	-	9.778	-	9.767	217[1]	9.717	172	9.644	135	9.492	96	9.379	76
1200S	12	11.794	-	11.784	-	11.781	-	11.778	-	11.767	-	11.717	207[1]	11.644	164	11.492	113	11.379	92
1400S	14	13.794	-	13.784	-	13.781	-	13.778	-	13.767	-	13.717	242[1]	13.644	192	13.492	133	13.379	108
1600S	16	15.794	-	15.784	-	15.781	-	15.778	-	15.767	-	15.717	-	15.644	220[1]	15.492	152	15.379	124

[1] h/t exceeds 200
[2] h value used for h/t calculation is the flat width of the web. For S members, this is the out-to-out member size, minus twice the thickness, minus twice the inside bend radius.
[3] h/t values exceeding 260 are marked with a dash (-)
[4] h/t values in this table apply to S (studs & joists) members only, and do not apply to tracks and channels

Symbol Definitions for Section Properties:

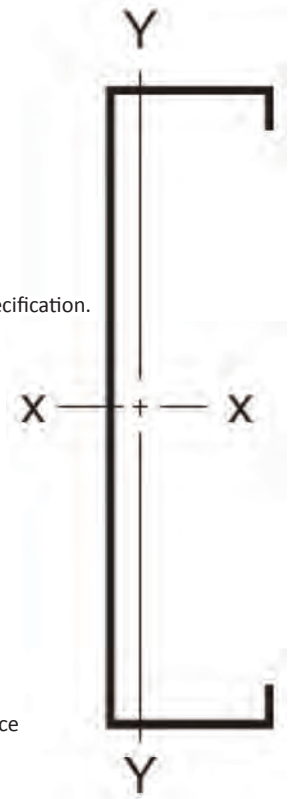

Gross Properties

I_x: Moment of inertia of the gross section about the X-X axis (strong axis).
S_x: Section modulus about the X-X axis.
R_x: Radius of gyration of the gross section about the X-X axis.
I_y: Moment of inertia of the gross section about the Y-Y axis (weak axis).
R_y: Radius of gyration of the gross section about the Y-Y axis.

Effective Properties

I_{xe}: Moment of inertia for deflection calculations based on "Procedure 1 for Deflection Determination" of the 2007 AISI Specification.
S_{xe}: Effective section modulus about the X-X axis when stress = F_y.
M_{al}: Allowable moment based on local buckling.
M_{ad}: Allowable moment based on distortional buckling, assuming $K_\phi = 0$.
M_a: Allowable Bending Moment – Based on the effective section modulus and the allowable stress including the strength increase from cold-work of forming (AISI 7.2) where applicable.
V_{ag}: Allowable strong axis shear away from punchout, calculated in accordance with AISI section C3.2.1.
$V_{a\,(net)}$: Allowable strong axis shear at the punchout, calculated in accordance with AISI section C3.2.2.

Torsional and Other Properties

J: St. Venant Torsional Constant.
C_w: Torsional warping constant.
m: Distance from shear center to mid-plane of web.
X_o: Distance from the shear center to the centroid along the principal X-axis.
R_o: Polar radius of gyration about the centroidal principal axis.
ß: $1-(X_o/R_o)^2$
L_u: The longest weak axis (L_y) and torsional (L_t) unbraced length at which lateral torsional buckling is restrained in accordance with AISI C3.1.2.1.
K_ϕ: Distortional buckling moment (M_{ad}) is calculated without the beneficial effect of sheathing to rotational stiffness, K_ϕ=0.

Non-Structural Stud Section Properties

Complies with 2009 & 2012 International Building Code (IBC)

Section Properties Table Notes

1. The centerline bend radius is based on inside corner radii shown in thickness table on page 2.
2. Effective properties incorporate the strength increase from the cold work of forming as applicable per AISI A7.2.
3. Tabulated gross properties are based on the full-unreduced cross section of the studs, away from punchouts.
4. For deflection calculations, use the effective moment of inertia.
5. Allowable moment is the lesser of M_{al} and M_{ad}. Stud distortional buckling is based on an assumed $K_{\varphi} = 0$.
6. See page 2 for additional notes.

Section	Design Thickness (in)	F_y (ksi)	Gross Properties							Effective Properties						Torsional						L_u (in)
			Area (in^2)	Weight (lb/ft)	I_x (in^4)	S_x (in^3)	R_x (in)	I_y (in^4)	R_y (in)	I_{xe} (in^4)	S_{xe} (in^3)	M_{al} (in-k)	M_{ad} (in-k)	V_{ag} (lb)	$V_{a\,(net)}$ (lb)	Jx1000 (in^4)	C_w (in^6)	X_o (in)	m (in)	R_o (in)	ß	
162S125-18	0.0188	33	0.080	0.27	0.038	0.046	0.686	0.016	0.447	0.034	0.031	0.61	0.65	302	100	0.009	0.009	-1.029	0.594	1.315	0.388	29.0
162S125-27	0.0283	33	0.120	0.41	0.056	0.068	0.682	0.023	0.443	0.055	0.053	1.05	1.14	494	106	0.032	0.013	-1.017	0.587	1.302	0.390	29.1
162S125-30	0.0312	33	0.131	0.45	0.061	0.075	0.681	0.026	0.441	0.060	0.060	1.19	1.29	543	106	0.043	0.014	-1.014	0.585	1.298	0.390	29.0
162S125-33	0.0346	33	0.145	0.49	0.067	0.083	0.679	0.028	0.440	0.066	0.069	1.37	1.48	601	105	0.058	0.016	-1.010	0.583	1.294	0.391	29.3
250S125-18	0.0188	33	0.097	0.33	0.099	0.079	1.014	0.019	0.439	0.089	0.059	1.17	1.03	258	196	0.011	0.023	-0.904	0.543	1.427	0.599	29.0
250S125-27	0.0283	33	0.144	0.49	0.147	0.118	1.009	0.027	0.434	0.144	0.097	1.92	1.83	685	344	0.039	0.034	-0.893	0.536	1.416	0.602	28.9
250S125-30	0.0312	33	0.159	0.54	0.161	0.129	1.008	0.030	0.433	0.159	0.110	2.17	2.09	832	378	0.052	0.037	-0.889	0.534	1.412	0.603	28.9
250S125-33	0.0346	33	0.176	0.60	0.178	0.142	1.006	0.033	0.431	0.175	0.125	2.48	2.41	975	399	0.070	0.040	-0.885	0.532	1.408	0.605	28.9
250S125-43	0.0451	33	0.227	0.77	0.228	0.182	1.001	0.041	0.426	0.225	0.177	3.49	3.43	1,265	394	0.154	0.050	-0.873	0.525	1.396	0.608	28.9
250S125-54	0.0566	33	0.280	0.95	0.277	0.222	0.994	0.049	0.419	0.277	0.218	4.98[2]	5.07	1,553	373	0.299	0.060	-0.859	0.518	1.379	0.612	26.8
250S125-54	0.0566	50	0.280	0.95	0.277	0.222	0.994	0.049	0.419	0.274	0.209	6.25	6.17	2,353	565	0.299	0.060	-0.859	0.518	1.379	0.612	23.3
250S125-68	0.0713	33	0.345	1.18	0.334	0.267	0.984	0.057	0.408	0.334	0.266	6.30[2]	6.32	1,891	342	0.585	0.072	-0.839	0.508	1.356	0.617	26.5
250S125-68	0.0713	50	0.345	1.18	0.334	0.267	0.984	0.057	0.408	0.334	0.262	7.84	8.01	2,866	519	0.585	0.072	-0.839	0.508	1.356	0.617	23.3
350S125-18	0.0188	33	0.115	0.39	0.215	0.123	1.366	0.021	0.423	0.203	0.072	1.42	1.47	180	159	0.014	0.050	-0.797	0.495	1.637	0.763	28.8
350S125-27	0.0283	33	0.173	0.59	0.320	0.183	1.361	0.030	0.418	0.315	0.130	2.57	2.65	614	359	0.046	0.072	-0.787	0.489	1.627	0.766	28.7
350S125-30	0.0312	33	0.190	0.65	0.351	0.201	1.359	0.033	0.417	0.346	0.150	2.96	3.04	824	436	0.062	0.079	-0.784	0.487	1.624	0.767	28.6
350S125-33	0.0346	33	0.210	0.72	0.387	0.221	1.358	0.036	0.415	0.382	0.175	3.45	3.53	1,024	487	0.084	0.087	-0.780	0.485	1.620	0.768	28.6
350S125-43	0.0451	33	0.272	0.93	0.498	0.284	1.352	0.046	0.410	0.495	0.258	5.10	5.11	1,739	631	0.184	0.109	-0.769	0.479	1.609	0.771	28.4
350S125-54	0.0566	33	0.337	1.15	0.608	0.348	1.344	0.055	0.402	0.608	0.328	6.49	6.87	2,253	633	0.360	0.131	-0.755	0.471	1.593	0.775	28.4
350S125-54	0.0566	50	0.337	1.15	0.608	0.348	1.344	0.055	0.402	0.604	0.308	9.22	9.25	3,372	947	0.360	0.131	-0.755	0.471	1.593	0.775	22.9
350S125-68	0.0713	33	0.417	1.42	0.739	0.422	1.332	0.064	0.391	0.737	0.409	9.67[2]	9.98	2,774	592	0.706	0.156	-0.737	0.462	1.571	0.780	25.7
350S125-68	0.0713	50	0.417	1.42	0.739	0.422	1.332	0.064	0.391	0.737	0.400	11.97	12.54	4,202	897	0.706	0.156	-0.737	0.462	1.571	0.780	22.8
362S125-18	0.0188	33	0.118	0.40	0.234	0.129	1.409	0.021	0.421	0.221	0.075	1.48	1.52	173	163	0.014	0.054	-0.786	0.490	1.667	0.778	28.8
362S125-27	0.0283	33	0.176	0.60	0.347	0.192	1.404	0.031	0.416	0.342	0.135	2.67	2.75	592	370	0.047	0.079	-0.776	0.484	1.657	0.781	28.6
362S125-30	0.0312	33	0.194	0.66	0.381	0.210	1.402	0.033	0.415	0.376	0.156	3.08	3.17	794	449	0.063	0.086	-0.773	0.482	1.654	0.782	28.6
362S125-33	0.0346	33	0.215	0.73	0.421	0.232	1.400	0.037	0.413	0.415	0.182	3.59	3.67	1,024	521	0.086	0.094	-0.769	0.480	1.650	0.783	28.5
362S125-43	0.0451	33	0.278	0.95	0.540	0.298	1.395	0.046	0.408	0.537	0.269	5.31	5.33	1,739	676	0.188	0.118	-0.758	0.473	1.639	0.786	28.4
362S125-54	0.0566	33	0.344	1.17	0.661	0.365	1.386	0.055	0.400	0.661	0.343	6.78	7.19	2,341	705	0.367	0.142	-0.744	0.466	1.623	0.790	28.3
362S125-54	0.0566	50	0.344	1.17	0.661	0.365	1.386	0.055	0.400	0.656	0.321	9.62	9.65	3,372	1,016	0.367	0.142	-0.744	0.466	1.623	0.790	22.8
362S125-68	0.0713	33	0.426	1.45	0.803	0.443	1.374	0.065	0.389	0.802	0.430	8.51	8.76	2,884	662	0.721	0.169	-0.726	0.457	1.602	0.795	28.2
362S125-68	0.0713	50	0.426	1.45	0.803	0.443	1.374	0.065	0.389	0.802	0.418	12.52	13.11	4,370	1,004	0.721	0.169	-0.726	0.457	1.602	0.795	22.7
400S125-18[1]	0.0188	33	0.125	0.42	0.294	0.147	1.536	0.021	0.414	0.281	0.083	1.64	1.68	156	156	0.015	0.068	-0.754	0.475	1.760	0.816	28.7
400S125-27	0.0283	33	0.187	0.64	0.438	0.219	1.531	0.031	0.410	0.431	0.151	2.97	3.07	533	398	0.050	0.098	-0.744	0.469	1.751	0.819	28.5
400S125-30	0.0312	33	0.206	0.70	0.481	0.240	1.529	0.034	0.408	0.474	0.174	3.44	3.53	715	484	0.067	0.107	-0.741	0.467	1.748	0.820	28.5
400S125-33	0.0346	33	0.228	0.77	0.531	0.265	1.527	0.038	0.407	0.524	0.203	4.01	4.10	976	595	0.091	0.118	-0.738	0.465	1.744	0.821	28.4
400S125-43	0.0451	33	0.295	1.00	0.682	0.341	1.521	0.048	0.402	0.680	0.301	5.96	5.99	1,739	810	0.200	0.148	-0.727	0.459	1.733	0.824	28.2
400S125-54	0.0566	33	0.365	1.24	0.835	0.418	1.512	0.057	0.394	0.835	0.387	7.65	8.12	2,603	944	0.390	0.178	-0.713	0.451	1.718	0.828	28.1
400S125-54	0.0566	50	0.365	1.24	0.835	0.418	1.512	0.057	0.394	0.830	0.361	10.81	10.87	3,372	1,223	0.390	0.178	-0.713	0.451	1.718	0.828	22.7
400S125-68	0.0713	33	0.452	1.54	1.017	0.509	1.499	0.066	0.383	1.015	0.492	9.72	10.05	3,215	895	0.767	0.213	-0.695	0.442	1.696	0.832	28.0
400S125-68	0.0713	50	0.452	1.54	1.017	0.509	1.499	0.066	0.383	1.015	0.474	14.18	14.84	4,871	1,356	0.767	0.213	-0.695	0.442	1.696	0.832	22.5
550S125-18[1, 3]	0.0188	33	0.153	0.52	0.630	0.229	2.029	0.023	0.390							0.018	0.140	-0.651	0.423	2.166	0.910	22.9
550S125-27	0.0283	33	0.229	0.78	0.938	0.341	2.023	0.034	0.385	0.898	0.246	4.86	4.26	382	382	0.061	0.205	-0.641	0.417	2.157	0.912	27.9
550S125-30	0.0312	33	0.252	0.86	1.031	0.375	2.021	0.037	0.384	0.996	0.286	5.65	4.95	512	512	0.082	0.224	-0.639	0.415	2.154	0.912	27.9
550S125-33	0.0346	33	0.279	0.95	1.139	0.414	2.019	0.041	0.382	1.111	0.335	6.62	5.78	699	699	0.112	0.246	-0.635	0.413	2.151	0.913	27.8
550S125-43	0.0451	33	0.362	1.23	1.468	0.534	2.013	0.052	0.377	1.458	0.500	9.88	8.61	1,550	1,199	0.246	0.309	-0.625	0.407	2.141	0.915	27.6
550S125-54	0.0566	33	0.450	1.53	1.805	0.656	2.002	0.061	0.369	1.805	0.647	12.79	11.92	2,739	1,666	0.481	0.374	-0.613	0.401	2.126	0.917	27.3
550S125-54	0.0566	50	0.450	1.53	1.805	0.656	2.002	0.061	0.369	1.791	0.606	18.13	15.75	3,093	1,881	0.481	0.374	-0.613	0.401	2.126	0.917	22.1
550S125-68	0.0713	33	0.559	1.90	2.209	0.803	1.987	0.072	0.358	2.205	0.801	18.94[2]	18.59	4,347	2,057	0.948	0.448	-0.597	0.392	2.106	0.920	24.6
550S125-68	0.0713	50	0.559	1.90	2.209	0.803	1.987	0.072	0.358	2.205	0.791	23.68	21.98	5,350	2,532	0.948	0.448	-0.597	0.392	2.106	0.920	21.8
600S125-18[1, 3]	0.0188	33	0.162	0.55	0.778	0.259	2.189	0.024	0.382							0.019	0.172	-0.623	0.408	2.308	0.927	22.7
600S125-27[1]	0.0283	33	0.243	0.83	1.160	0.387	2.183	0.035	0.377	1.097	0.271	5.35	4.63	349	349	0.065	0.251	-0.614	0.402	2.299	0.929	27.7
600S125-30	0.0312	33	0.268	0.91	1.275	0.425	2.181	0.038	0.376	1.218	0.315	6.22	5.39	468	468	0.087	0.274	-0.611	0.401	2.296	0.929	27.6
600S125-33	0.0346	33	0.297	1.01	1.409	0.470	2.179	0.042	0.374	1.361	0.369	7.30	6.32	638	638	0.118	0.300	-0.608	0.399	2.293	0.930	27.6
600S125-43	0.0451	33	0.385	1.31	1.817	0.606	2.173	0.053	0.369	1.807	0.555	10.96	9.46	1,416	1,240	0.261	0.378	-0.598	0.393	2.284	0.931	27.3
600S125-54	0.0566	33	0.479	1.63	2.236	0.745	2.161	0.063	0.362	2.236	0.727	14.37	13.18	2,739	1,890	0.511	0.457	-0.586	0.386	2.269	0.933	27.1
600S125-54	0.0566	50	0.479	1.63	2.236	0.745	2.161	0.063	0.362	2.220	0.673	20.15	17.34	2,823	1,947	0.511	0.457	-0.586	0.386	2.269	0.933	21.9
600S125-68	0.0713	33	0.595	2.02	2.740	0.913	2.146	0.073	0.351	2.735	0.911	21.53[2]	20.65	4,347	2,339	1.008	0.548	-0.570	0.378	2.248	0.936	24.4
600S125-68	0.0713	50	0.595	2.02	2.740	0.913	2.146	0.073	0.351	2.735	0.898	26.88	24.34	5,350	2,879	1.008	0.548	-0.570	0.378	2.248	0.936	21.6
800S125-33[1]	0.0346	33	0.366	1.25	2.881	0.720	2.806	0.044	0.347	2.656	0.507	10.02	8.22	474	474	0.146	0.582	-0.519	0.349	2.875	0.967	26.6
800S125-43	0.0451	33	0.475	1.62	3.721	0.930	2.799	0.056	0.342	3.581	0.773	15.27	12.56	1,051	1051	0.322	0.735	-0.510	0.344	2.865	0.968	26.3
800S125-54	0.0566	33	0.592	2.01	4.593	1.148	2.786	0.066	0.335	4.566	1.035	20.46	17.87	2,091	2,091	0.632	0.889	-0.499	0.338	2.850	0.969	26.0
800S125-54	0.0566	50	0.592	2.01	4.593	1.148	2.786	0.066	0.335	4.431	0.942	28.21	23.18	2,091	2,091	0.632	0.889	-0.499	0.338	2.850	0.969	21.1
800S125-68	0.0713	33	0.738	2.51	5.653	1.413	2.768	0.078	0.324	5.644	1.375	27.18	25.21	4,221	3,367	1.250	1.068	-0.485	0.330	2.829	0.971	25.6
800S125-68	0.0713	50	0.738	2.51	5.653	1.413	2.768	0.078	0.324	5.632	1.287	38.54	33.22	4,221	3,367	1.250	1.068	-0.485	0.330	2.829	0.971	20.8

[1] Web-height to thickness ratio exceeds 200. Web Stiffeners are required at all support points and concentrated loads.
[2] Allowable moment includes cold-work of forming.
[3] Where web height-to-thickness ratio exceeds 260, or flange width-to-thickness ratio exceeds 60, effective properties are not calculated. See AISI S100-07 section B1. Application of these products in a non-composite design shall be approved by a design professional.

Light Steel Framing Members

Structural Stud Section Properties

See Section Properties Table Notes on page 4.

Complies with 2009 & 2012 International Building Code (IBC)

Section	Design Thickness	F_y	Gross Properties							Effective Properties						Torsional						L_u
			Area	Weight	I_x	S_x	R_x	I_y	R_y	I_{xe}	S_{xe}	M_{al}	M_{ad}	V_{ag}	$V_{a\,(net)}$	Jx1000	C_w	X_o	m	R_o	ß	
	(in)	(ksi)	(in^2)	(lb/ft)	(in^4)	(in^3)	(in)	(in^4)	(in)	(in^4)	(in^3)	(in-k)	(in-k)	(lb)	(lb)	(in^4)	(in^6)	(in)	(in)	(in)		(in)
250S137-33	0.0346	33	0.197	0.67	0.203	0.163	1.015	0.052	0.515	0.203	0.158	3.11	3.10	975	399	0.079	0.076	-1.141	0.677	1.612	0.499	35.6
250S137-43	0.0451	33	0.255	0.87	0.261	0.208	1.010	0.067	0.511	0.261	0.205	4.53[2]	4.60	1,265	394	0.173	0.096	-1.129	0.670	1.599	0.501	33.6
250S137-54	0.0566	33	0.316	1.07	0.318	0.255	1.004	0.080	0.504	0.318	0.255	5.76[2]	5.75	1,553	373	0.337	0.115	-1.115	0.663	1.583	0.504	33.4
250S137-54	0.0566	50	0.316	1.07	0.318	0.255	1.004	0.080	0.504	0.318	0.244	8.22[2]	8.34	2,353	565	0.337	0.115	-1.115	0.663	1.583	0.504	27.1
250S137-68	0.0713	33	0.390	1.33	0.386	0.309	0.994	0.095	0.495	0.386	0.309	7.19[2]	7.19	1,891	342	0.661	0.138	-1.096	0.653	1.561	0.507	33.1
250S137-68	0.0713	50	0.390	1.33	0.386	0.309	0.994	0.095	0.495	0.386	0.308	10.65[2]	10.67	2,866	519	0.661	0.138	-1.096	0.653	1.561	0.507	26.8
250S162-33	0.0346	33	0.223	0.76	0.235	0.188	1.027	0.087	0.624	0.235	0.180	3.55	3.56	975	399	0.089	0.146	-1.470	0.859	1.898	0.401	44.1
250S162-43	0.0451	33	0.289	0.98	0.302	0.242	1.022	0.111	0.620	0.302	0.240	5.22[2]	5.25	1,265	394	0.196	0.184	-1.457	0.852	1.885	0.402	42.1
250S162-54	0.0566	33	0.358	1.22	0.370	0.296	1.016	0.135	0.613	0.370	0.296	6.57[2]	6.57	1,553	373	0.383	0.223	-1.443	0.845	1.868	0.403	41.8
250S162-54	0.0566	50	0.358	1.22	0.370	0.296	1.016	0.135	0.613	0.370	0.284	9.42[2]	9.46	2,353	565	0.383	0.223	-1.443	0.845	1.868	0.403	33.9
250S162-68	0.0713	33	0.443	1.51	0.450	0.360	1.007	0.162	0.605	0.450	0.360	8.21[2]	8.21	1,891	342	0.752	0.268	-1.424	0.835	1.846	0.405	41.7
250S162-68	0.0713	50	0.443	1.51	0.450	0.360	1.007	0.162	0.605	0.450	0.357	12.11[2]	12.21	2,866	519	0.752	0.268	-1.424	0.835	1.846	0.405	33.7
350S162-33	0.0346	33	0.258	0.88	0.508	0.290	1.404	0.098	0.617	0.508	0.257	5.08	5.22	1,024	487	0.103	0.277	-1.324	0.796	2.026	0.573	42.7
350S162-43	0.0451	33	0.334	1.14	0.654	0.374	1.400	0.125	0.612	0.654	0.357	7.05	7.31	1,739	631	0.227	0.350	-1.312	0.789	2.014	0.575	42.6
350S162-54	0.0566	33	0.415	1.41	0.804	0.460	1.392	0.152	0.606	0.804	0.447	8.83	9.08	2,253	633	0.443	0.426	-1.298	0.782	1.998	0.578	42.7
350S162-54	0.0566	50	0.415	1.41	0.804	0.460	1.392	0.152	0.606	0.804	0.426	12.74	13.05	3,372	947	0.443	0.426	-1.298	0.782	1.998	0.578	34.5
350S162-68	0.0713	33	0.515	1.75	0.985	0.563	1.383	0.184	0.597	0.985	0.551	12.56[2]	12.83	2,774	592	0.872	0.514	-1.280	0.772	1.977	0.581	39.7
350S162-68	0.0713	50	0.515	1.75	0.985	0.563	1.383	0.184	0.597	0.985	0.549	16.44	16.84	4,202	897	0.872	0.514	-1.280	0.772	1.977	0.581	34.5
350S300-54	0.0566	33	0.585	1.99	1.286	0.735	1.483	0.724	1.113	1.279	0.582	11.51	12.73	2,253	633	0.624	2.166	-2.682	1.531	3.261	0.323	74.7
350S300-54	0.0566	50	0.585	1.99	1.286	0.735	1.483	0.724	1.113	1.213	0.508	15.20	16.71	3,372	947	0.624	2.166	-2.682	1.531	3.261	0.323	60.4
350S300-68	0.0713	33	0.729	2.48	1.586	0.906	1.475	0.888	1.104	1.586	0.775	15.31	16.98	2,774	592	1.235	2.649	-2.663	1.521	3.238	0.324	75.1
350S300-68	0.0713	50	0.729	2.48	1.586	0.906	1.475	0.888	1.104	1.557	0.687	20.56	22.54	4,202	897	1.235	2.649	-2.663	1.521	3.238	0.324	60.5
362S137-33	0.0346	33	0.236	0.80	0.479	0.264	1.424	0.059	0.501	0.479	0.232	4.59	4.73	1,024	521	0.094	0.165	-1.003	0.615	1.813	0.694	34.7
362S137-43	0.0451	33	0.306	1.04	0.616	0.340	1.419	0.075	0.497	0.616	0.320	6.32	6.65	1,739	676	0.207	0.208	-0.991	0.608	1.801	0.697	34.6
362S137-54	0.0566	33	0.379	1.29	0.756	0.417	1.411	0.091	0.490	0.756	0.402	7.94	8.24	2,341	705	0.405	0.251	-0.978	0.601	1.785	0.700	34.6
362S137-54	0.0566	50	0.379	1.29	0.756	0.417	1.411	0.091	0.490	0.756	0.381	11.42	11.91	3,372	1016	0.405	0.251	-0.978	0.601	1.785	0.700	27.9
362S137-68	0.0713	33	0.470	1.60	0.922	0.509	1.401	0.109	0.480	0.922	0.498	9.84	10.05	2,884	662	0.797	0.302	-0.959	0.592	1.764	0.704	34.6
362S137-68	0.0713	50	0.470	1.60	0.922	0.509	1.401	0.109	0.480	0.922	0.493	14.77	15.24	4,370	1,004	0.797	0.302	-0.959	0.592	1.764	0.704	27.8
362S162-33	0.0346	33	0.262	0.89	0.551	0.304	1.450	0.099	0.616	0.551	0.268	5.29	5.43	1,024	521	0.105	0.297	-1.308	0.789	2.048	0.592	42.6
362S162-43	0.0451	33	0.340	1.16	0.710	0.392	1.445	0.127	0.611	0.710	0.372	7.34	7.62	1,739	676	0.230	0.376	-1.297	0.782	2.036	0.594	42.5
362S162-54	0.0566	33	0.422	1.44	0.873	0.481	1.438	0.154	0.604	0.873	0.466	9.22	9.51	2,341	705	0.451	0.457	-1.283	0.774	2.020	0.597	42.5
362S162-54	0.0566	50	0.422	1.44	0.873	0.481	1.438	0.154	0.604	0.873	0.444	13.28	13.59	3,372	1,016	0.451	0.457	-1.283	0.774	2.020	0.597	34.4
362S162-68	0.0713	33	0.524	1.78	1.069	0.590	1.429	0.186	0.596	1.069	0.579	11.43	11.65	2,884	662	0.887	0.552	-1.264	0.765	1.998	0.600	42.7
362S162-68	0.0713	50	0.524	1.78	1.069	0.590	1.429	0.186	0.596	1.069	0.574	17.18	17.65	4,370	1,004	0.887	0.552	-1.264	0.765	1.998	0.600	34.3
362S200-33	0.0346	33	0.297	1.01	0.648	0.358	1.478	0.177	0.772	0.647	0.294	5.81	6.19	1,024	521	0.118	0.577	-1.741	1.030	2.411	0.478	53.6
362S200-43	0.0451	33	0.385	1.31	0.836	0.461	1.474	0.227	0.767	0.836	0.427	8.43	8.70	1,739	676	0.261	0.734	-1.729	1.024	2.398	0.480	53.5
362S200-54	0.0566	33	0.479	1.63	1.030	0.568	1.467	0.277	0.761	1.030	0.553	10.93	11.23	2,341	705	0.511	0.896	-1.715	1.016	2.382	0.482	53.6
362S200-54	0.0566	50	0.479	1.63	1.030	0.568	1.467	0.277	0.761	1.030	0.490	14.66	15.47	3,372	1,016	0.511	0.896	-1.715	1.016	2.382	0.482	43.3
362S200-68	0.0713	33	0.595	2.02	1.265	0.698	1.458	0.337	0.753	1.265	0.687	15.29[2]	15.54	2,884	662	1.008	1.089	-1.696	1.006	2.360	0.484	50.6
362S200-68	0.0713	50	0.595	2.02	1.265	0.698	1.458	0.337	0.753	1.265	0.666	19.95	20.51	4,370	1,004	1.008	1.089	-1.696	1.006	2.360	0.484	43.3
362S300-54	0.0566	33	0.592	2.01	1.390	0.767	1.533	0.734	1.114	1.383	0.607	11.99	13.22	2,341	705	0.632	2.316	-2.659	1.522	3.265	0.337	74.5
362S300-54	0.0566	50	0.592	2.01	1.390	0.767	1.533	0.734	1.114	1.312	0.529	15.83	17.34	3,372	1,016	0.632	2.316	-2.659	1.522	3.265	0.337	60.2
362S300-68	0.0713	33	0.738	2.51	1.716	0.947	1.525	0.900	1.105	1.716	0.811	16.02	17.65	2,884	662	1.250	2.833	-2.640	1.512	3.243	0.337	74.9
362S300-68	0.0713	50	0.738	2.51	1.716	0.947	1.525	0.900	1.105	1.684	0.716	21.44	23.42	4,370	1,004	1.250	2.833	-2.640	1.512	3.243	0.337	60.4
400S137-33	0.0346	33	0.249	0.85	0.603	0.301	1.556	0.061	0.496	0.603	0.259	5.12	5.29	976	595	0.099	0.204	-0.965	0.597	1.897	0.741	34.5
400S137-43	0.0451	33	0.323	1.10	0.776	0.388	1.551	0.078	0.491	0.776	0.359	7.09	7.47	1,739	810	0.219	0.257	-0.954	0.591	1.885	0.744	34.3
400S137-54	0.0566	33	0.401	1.36	0.953	0.477	1.542	0.094	0.484	0.953	0.453	8.96	9.42	2,603	944	0.428	0.311	-0.940	0.583	1.870	0.747	34.3
400S137-54	0.0566	50	0.401	1.36	0.953	0.477	1.542	0.094	0.484	0.953	0.428	12.82	13.38	3,372	1,223	0.428	0.311	-0.940	0.583	1.870	0.747	27.7
400S137-68	0.0713	33	0.497	1.69	1.165	0.582	1.531	0.112	0.475	1.165	0.567	11.21	11.51	3,215	895	0.842	0.375	-0.922	0.574	1.849	0.751	34.2
400S137-68	0.0713	50	0.497	1.69	1.165	0.582	1.531	0.112	0.475	1.165	0.558	16.70	17.44	4,871	1,356	0.842	0.375	-0.922	0.574	1.849	0.751	27.6
400S162-33	0.0346	33	0.275	0.94	0.692	0.346	1.586	0.103	0.611	0.692	0.299	5.91	6.07	976	595	0.110	0.363	-1.263	0.768	2.118	0.644	42.3
400S162-43	0.0451	33	0.357	1.21	0.892	0.446	1.581	0.131	0.606	0.892	0.417	8.23	8.54	1,739	810	0.242	0.460	-1.252	0.761	2.106	0.647	42.2
400S162-54	0.0566	33	0.443	1.51	1.098	0.549	1.574	0.159	0.600	1.098	0.526	10.39	10.84	2,603	944	0.473	0.560	-1.238	0.754	2.090	0.649	42.2
400S162-54	0.0566	50	0.443	1.51	1.098	0.549	1.574	0.159	0.600	1.098	0.498	14.90	15.25	3,372	1,223	0.473	0.560	-1.238	0.754	2.090	0.649	34.1
400S162-68	0.0713	33	0.550	1.87	1.346	0.673	1.564	0.192	0.591	1.346	0.658	13.00	13.30	3,215	895	0.933	0.677	-1.220	0.745	2.069	0.653	42.2
400S162-68	0.0713	50	0.550	1.87	1.346	0.673	1.564	0.192	0.591	1.346	0.648	19.41	20.15	4,871	1,356	0.933	0.677	-1.220	0.745	2.069	0.653	34.0

[1] Web-height to thickness ratio exceeds 200. Web Stiffeners are required at all support points and concentrated loads.
[2] Allowable moment includes cold-work of forming.

Section	Design Thickness	F_y	Gross Properties							Effective Properties						Torsional						L_u
			Area	Weight	I_x	S_x	R_x	I_y	R_y	I_{xe}	S_{xe}	M_{al}	M_{ad}	V_{ag}	$V_{a\,(net)}$	Jx1000	C_w	X_o	m	R_o	ß	
	(in)	(ksi)	(in^2)	(lb/ft)	(in^4)	(in^3)	(in)	(in^4)	(in)	(in^4)	(in^3)	(in-k)	(in-k)	(lb)	(lb)	(in^4)	(in^6)	(in)	(in)	(in)		(in)
400S200-33	0.0346	33	0.310	1.05	0.812	0.406	1.619	0.183	0.769	0.812	0.328	6.49	6.90	976	595	0.124	0.697	-1.688	1.007	2.462	0.530	53.1
400S200-43	0.0451	33	0.402	1.37	1.047	0.524	1.615	0.235	0.764	1.047	0.478	9.45	9.74	1,739	810	0.272	0.886	-1.676	1.000	2.449	0.532	53.0
400S200-54	0.0566	33	0.500	1.70	1.292	0.646	1.608	0.287	0.758	1.292	0.623	12.30	12.77	2,603	944	0.534	1.083	-1.662	0.993	2.433	0.534	53.0
400S200-54	0.0566	50	0.500	1.70	1.292	0.646	1.608	0.287	0.758	1.292	0.549	16.43	17.31	3,372	1,223	0.534	1.083	-1.662	0.993	2.433	0.534	42.9
400S200-68	0.0713	33	0.622	2.12	1.589	0.795	1.599	0.349	0.750	1.589	0.780	15.40	15.70	3,215	895	1.054	1.318	-1.643	0.983	2.412	0.536	53.2
400S200-68	0.0713	50	0.622	2.12	1.589	0.795	1.599	0.349	0.750	1.589	0.751	22.48	23.04	4,871	1,356	1.054	1.318	-1.643	0.983	2.412	0.536	42.9
400S300-54	0.0566	33	0.613	2.09	1.732	0.866	1.681	0.760	1.114	1.723	0.680	13.44	14.70	2,603	944	0.655	2.802	-2.594	1.496	3.285	0.377	74.0
400S300-54	0.0566	50	0.613	2.09	1.732	0.866	1.681	0.760	1.114	1.637	0.592	17.72	19.25	3,372	1,223	0.655	2.802	-2.594	1.496	3.285	0.377	59.9
400S300-68	0.0713	33	0.764	2.60	2.139	1.070	1.673	0.933	1.105	2.139	0.914	18.06	19.68	3,215	895	1.295	3.432	-2.574	1.486	3.263	0.378	74.3
400S300-68	0.0713	50	0.764	2.60	2.139	1.070	1.673	0.933	1.105	2.099	0.805	24.09	26.05	4,871	1,356	1.295	3.432	-2.574	1.486	3.263	0.378	60.0
550S162-33	0.0346	33	0.327	1.11	1.458	0.530	2.112	0.113	0.589	1.458	0.512	10.11	8.63	699	699	0.130	0.713	-1.114	0.697	2.459	0.795	41.4
550S162-43	0.0451	33	0.424	1.44	1.883	0.685	2.107	0.145	0.584	1.883	0.681	14.79[2]	13.14	1,550	1,199	0.288	0.905	-1.103	0.691	2.448	0.797	39.2
550S162-54	0.0566	33	0.528	1.80	2.324	0.845	2.098	0.176	0.577	2.324	0.845	18.76[2]	17.87	2,739	1,666	0.564	1.105	-1.090	0.684	2.434	0.800	38.7
550S162-54	0.0566	50	0.528	1.80	2.324	0.845	2.098	0.176	0.577	2.324	0.811	26.86[2]	23.52	3,093	1,881	0.564	1.105	-1.090	0.684	2.434	0.800	31.6
550S162-68	0.0713	33	0.657	2.24	2.861	1.040	2.086	0.212	0.568	2.861	1.040	23.72[2]	23.72	4,347	2,057	1.114	1.342	-1.072	0.675	2.414	0.803	38.0
550S162-68	0.0713	50	0.657	2.24	2.861	1.040	2.086	0.212	0.568	2.861	1.031	34.94[2]	32.28	5,350	2,532	1.114	1.342	-1.072	0.675	2.414	0.803	31.1
550S300-54	0.0566	33	0.698	2.37	3.545	1.289	2.254	0.850	1.104	3.505	1.080	21.34	20.74	2,739	1,666	0.745	5.364	-2.365	1.401	3.449	0.530	73.0
550S300-54	0.0566	50	0.698	2.37	3.545	1.289	2.254	0.850	1.104	3.295	0.983	29.44	26.99	3,093	1,881	0.745	5.364	-2.365	1.401	3.449	0.530	59.2
550S300-68	0.0713	33	0.871	2.96	4.391	1.597	2.245	1.044	1.095	4.384	1.411	27.88	28.03	4,347	2,057	1.476	6.594	-2.346	1.391	3.427	0.531	73.1
550S300-68	0.0713	50	0.871	2.96	4.391	1.597	2.245	1.044	1.095	4.285	1.287	38.53	36.85	5,350	2,532	1.476	6.594	-2.346	1.391	3.427	0.531	59.1
600S137-33	0.0346	33	0.318	1.08	1.582	0.527	2.229	0.069	0.464	1.548	0.455	8.98	8.19	638	638	0.127	0.500	-0.807	0.519	2.416	0.889	33.5
600S137-43	0.0451	33	0.413	1.41	2.042	0.681	2.223	0.087	0.459	2.041	0.645	12.74	11.82	1,416	1,240	0.280	0.633	-0.796	0.513	2.406	0.890	33.3
600S137-54	0.0566	33	0.514	1.75	2.518	0.839	2.213	0.105	0.452	2.518	0.832	16.44	15.95	2,739	1,890	0.549	0.769	-0.784	0.506	2.391	0.893	33.0
600S137-54	0.0566	50	0.514	1.75	2.518	0.839	2.213	0.105	0.452	2.518	0.777	23.26	21.24	2,823	1,947	0.549	0.769	-0.784	0.506	2.391	0.893	26.8
600S137-68	0.0713	33	0.640	2.18	3.094	1.031	2.200	0.125	0.443	3.094	1.031	24.05[2]	24.05	4,347	2,339	1.084	0.930	-0.768	0.497	2.371	0.895	30.1
600S137-68	0.0713	50	0.640	2.18	3.094	1.031	2.200	0.125	0.443	3.094	1.030	30.84	28.89	5,350	2,879	1.084	0.930	-0.768	0.497	2.371	0.895	26.5
600S137-97	0.1017	33	0.889	3.03	4.188	1.396	2.170	0.159	0.422	4.188	1.396	34.48[2]	34.49	6,911	2,512	3.066	1.216	-0.734	0.480	2.330	0.901	28.8
600S137-97	0.1017	50	0.889	3.03	4.188	1.396	2.170	0.159	0.422	4.188	1.396	50.80[2]	50.80	10,472	3,805	3.066	1.216	-0.734	0.480	2.330	0.901	23.6
600S162-33	0.0346	33	0.344	1.17	1.793	0.598	2.282	0.116	0.581	1.793	0.577	11.41	9.47	638	638	0.137	0.861	-1.072	0.677	2.587	0.828	41.1
600S162-43	0.0451	33	0.447	1.52	2.316	0.772	2.276	0.148	0.576	2.316	0.767	16.68[2]	14.46	1,416	1,240	0.303	1.095	-1.062	0.670	2.577	0.830	39.0
600S162-54	0.0566	33	0.556	1.89	2.860	0.953	2.267	0.180	0.570	2.860	0.953	21.17[2]	19.75	2,739	1,890	0.594	1.337	-1.049	0.663	2.562	0.832	38.4
600S162-54	0.0566	50	0.556	1.89	2.860	0.953	2.267	0.180	0.570	2.860	0.916	30.33[2]	25.90	2,823	1,947	0.594	1.337	-1.049	0.663	2.562	0.832	31.4
600S162-68	0.0713	33	0.693	2.36	3.525	1.175	2.255	0.218	0.560	3.525	1.175	26.79[2]	26.78	4,347	2,339	1.174	1.626	-1.032	0.655	2.543	0.835	37.7
600S162-68	0.0713	50	0.693	2.36	3.525	1.175	2.255	0.218	0.560	3.525	1.164	39.47[2]	35.69	5,350	2,879	1.174	1.626	-1.032	0.655	2.543	0.835	30.8
600S162-97	0.1017	33	0.966	3.29	4.797	1.599	2.229	0.283	0.541	4.797	1.599	38.37[2]	38.37	6,911	2,512	3.329	2.153	-0.997	0.636	2.501	0.841	36.4
600S162-97	0.1017	50	0.966	3.29	4.797	1.599	2.229	0.283	0.541	4.797	1.599	56.73[2]	56.72	10,472	3,805	3.329	2.153	-0.997	0.636	2.501	0.841	29.8
600S162-118	0.1242	33	1.158	3.94	5.652	1.884	2.209	0.321	0.526	5.652	1.884	46.82[2]	46.82	8,267	2,391	5.956	2.487	-0.971	0.623	2.47	0.845	35.6
600S162-118	0.1242	50	1.158	3.94	5.652	1.884	2.209	0.321	0.526	5.652	1.884	68.94[2]	68.93	12,526	3,622	5.956	2.487	-0.971	0.623	2.47	0.845	29.1
600S200-33	0.0346	33	0.379	1.29	2.075	0.692	2.340	0.209	0.743	2.058	0.621	12.28	10.77	638	638	0.151	1.593	-1.457	0.901	2.855	0.740	51.6
600S200-43	0.0451	33	0.492	1.67	2.683	0.894	2.335	0.268	0.739	2.683	0.873	17.24	15.39	1,416	1,240	0.334	2.033	-1.446	0.894	2.844	0.742	51.4
600S200-54	0.0566	33	0.613	2.09	3.319	1.106	2.327	0.328	0.732	3.319	1.106	24.07[2]	22.07	2,739	1,890	0.655	2.493	-1.432	0.887	2.829	0.744	48.9
600S200-54	0.0566	50	0.613	2.09	3.319	1.106	2.327	0.328	0.732	3.319	1.015	30.40	27.38	2,823	1,947	0.655	2.493	-1.432	0.887	2.829	0.744	41.6
600S200-68	0.0713	33	0.764	2.60	4.101	1.367	2.316	0.400	0.723	4.101	1.367	30.42[2]	29.97	4,347	2,339	1.295	3.047	-1.415	0.878	2.809	0.746	48.2
600S200-68	0.0713	50	0.764	2.60	4.101	1.367	2.316	0.400	0.723	4.101	1.317	43.71[2]	39.69	5,350	2,879	1.295	3.047	-1.415	0.878	2.809	0.746	39.3
600S200-97	0.1017	33	1.067	3.63	5.612	1.871	2.293	0.530	0.705	5.612	1.871	43.49[2]	43.49	6,911	2,512	3.679	4.080	-1.378	0.859	2.767	0.752	46.9
600S200-97	0.1017	50	1.067	3.63	5.612	1.871	2.293	0.530	0.705	5.612	1.871	64.53[2]	63.67	10,472	3,805	3.679	4.080	-1.378	0.859	2.767	0.752	38.3
600S200-118	0.1242	33	1.283	4.36	6.641	2.214	2.275	0.611	0.690	6.641	2.214	53.05[2]	53.05	8,267	2,391	6.595	4.753	-1.351	0.845	2.735	0.756	46.1
600S200-118	0.1242	50	1.283	4.36	6.641	2.214	2.275	0.611	0.690	6.641	2.214	78.44[2]	78.44	12,526	3,622	6.595	4.753	-1.351	0.845	2.735	0.756	37.6
600S250-43	0.0451	33	0.537	1.83	3.082	1.027	2.396	0.458	0.923	3.082	0.918	18.14	16.21	1,416	1,240	0.364	3.411	-1.874	1.136	3.179	0.652	62.4
600S250-54	0.0566	33	0.670	2.28	3.819	1.273	2.388	0.562	0.917	3.819	1.159	22.90	21.90	2,739	1,890	0.715	4.194	-1.860	1.129	3.163	0.654	62.3
600S250-54	0.0566	50	0.670	2.28	3.819	1.273	2.388	0.562	0.917	3.766	1.069	32.00	28.71	2,823	1,947	0.715	4.194	-1.860	1.129	3.163	0.654	50.5
600S250-68	0.0713	33	0.836	2.84	4.727	1.576	2.378	0.688	0.908	4.727	1.508	32.82[2]	31.50	4,347	2,339	1.416	5.145	-1.842	1.119	3.142	0.656	59.2
600S250-68	0.0713	50	0.836	2.84	4.727	1.576	2.378	0.688	0.908	4.723	1.386	41.49	39.07	5,350	2,879	1.416	5.145	-1.842	1.119	3.142	0.656	50.4
600S250-97	0.1017	33	1.169	3.98	6.496	2.165	2.357	0.923	0.889	6.496	2.161	48.81[2]	48.91	6,911	2,512	4.030	6.947	-1.803	1.100	3.098	0.661	58.0
600S250-97	0.1017	50	1.169	3.98	6.496	2.165	2.357	0.923	0.889	6.496	2.063	69.38[2]	66.81	10,472	3,805	4.030	6.947	-1.803	1.100	3.098	0.661	47.3
600S250-118	0.1242	33	1.407	4.79	7.713	2.571	2.342	1.075	0.874	7.713	2.571	59.58[2]	59.59	8,267	2,391	7.234	8.142	-1.775	1.085	3.066	0.665	57.3
600S250-118	0.1242	50	1.407	4.79	7.713	2.571	2.342	1.075	0.874	7.713	2.498	85.92[2]	86.83	12,526	3,622	7.234	8.142	-1.775	1.085	3.066	0.665	46.6

[1] Web-height to thickness ratio exceeds 200. Web Stiffeners are required at all support points and concentrated loads.
[2] Allowable moment includes cold-work of forming.

Light Steel Framing Members

Structural Stud Section Properties

See Section Properties Table Notes on page 4.

Complies with 2009 & 2012 International Building Code (IBC)

Section	Design Thickness	F_y	Gross Properties							Effective Properties						Torsional						L_u
			Area	Weight	I_x	S_x	R_x	I_y	R_y	I_{xe}	S_{xe}	M_{al}	M_{ad}	V_{ag}	$V_{a\,(net)}$	Jx1000	C_w	X_o	m	R_o	ß	
	(in)	(ksi)	(in^2)	(lb/ft)	(in^4)	(in^3)	(in)	(in^4)	(in)	(in^4)	(in^3)	(in-k)	(in-k)	(lb)	(lb)	(in^4)	(in^6)	(in)	(in)	(in)		(in)
600S300-54	0.0566	33	0.726	2.47	4.319	1.440	2.439	0.875	1.098	4.269	1.211	23.93	22.80	2,739	1,890	0.775	6.452	-2.299	1.372	3.527	0.575	72.8
600S300-54	0.0566	50	0.726	2.47	4.319	1.440	2.439	0.875	1.098	4.014	1.106	33.13	29.62	2,823	1,947	0.775	6.452	-2.299	1.372	3.527	0.575	59.1
600S300-68	0.0713	33	0.907	3.09	5.354	1.785	2.430	1.075	1.089	5.344	1.581	31.23	30.88	4,347	2,339	1.537	7.937	-2.280	1.363	3.505	0.577	72.8
600S300-68	0.0713	50	0.907	3.09	5.354	1.785	2.430	1.075	1.089	5.221	1.446	43.30	40.53	5,350	2,879	1.537	7.937	-2.280	1.363	3.505	0.577	59.0
600S300-97	0.1017	33	1.271	4.32	7.381	2.460	2.410	1.454	1.070	7.381	2.352	52.07[2]	52.40	6,911	2,512	4.381	10.776	-2.241	1.343	3.461	0.581	68.8
600S300-97	0.1017	50	1.271	4.32	7.381	2.460	2.410	1.454	1.070	7.280	2.247	67.28	64.67	10,472	3,805	4.381	10.776	-2.241	1.343	3.461	0.581	58.8
600S300-118	0.1242	33	1.531	5.21	8.785	2.928	2.395	1.704	1.055	8.785	2.84	64.29[2]	66.28	8,267	2,391	7.872	12.683	-2.212	1.328	3.427	0.583	68.1
600S300-118	0.1242	50	1.531	5.21	8.785	2.928	2.395	1.704	1.055	8.713	2.797	94.24[2]	90.37	12,526	3,622	7.872	12.683	-2.212	1.328	3.427	0.583	55.3
600S350-54[3]	0.0566	33	0.825	2.81	5.022	1.674	2.467	1.491	1.344	4.911	1.452	28.70	27.98	2,739	1,890	0.881	12.942	-3.037	1.787	4.137	0.461	91.8
600S350-54[3]	0.0566	50	0.825	2.81	5.022	1.674	2.467	1.491	1.344	4.721	1.335	39.97	36.56	2,823	1,947	0.881	12.942	-3.037	1.787	4.137	0.461	74.4
600S350-68[3]	0.0713	33	1.032	3.51	6.237	2.079	2.459	1.841	1.336	6.237	1.949	38.50	37.63	4,347	2,339	1.748	15.968	-3.018	1.777	4.115	0.462	91.8
600S350-68[3]	0.0713	50	1.032	3.51	6.237	2.079	2.459	1.841	1.336	6.166	1.771	53.01	49.69	5,350	2,879	1.748	15.968	-3.018	1.777	4.115	0.462	74.4
600S350-97[3]	0.1017	33	1.449	4.93	8.631	2.877	2.441	2.518	1.318	8.631	2.822	61.55[2]	62.49	6,911	2,512	4.994	21.811	-2.979	1.757	4.071	0.464	87.5
600S350-97[3]	0.1017	50	1.449	4.93	8.631	2.877	2.441	2.518	1.318	8.631	2.593	77.64	78.36	10,472	3,805	4.994	21.811	-2.979	1.757	4.071	0.464	74.4
600S350-118[3]	0.1242	33	1.748	5.95	10.304	3.435	2.428	2.978	1.305	10.304	3.435	76.39[2]	76.40	8,267	2,391	8.990	25.791	-2.951	1.742	4.038	0.466	86.9
600S350-118[3]	0.1242	50	1.748	5.95	10.304	3.435	2.428	2.978	1.305	10.304	3.268	108.43[2]	107.66	12,526	3,622	8.990	25.791	-2.951	1.742	4.038	0.466	70.6
800S137-33[1]	0.0346	33	0.388	1.32	3.198	0.799	2.873	0.073	0.435	2.998	0.622	12.30	10.71	474	474	0.155	0.957	-0.696	0.460	2.987	0.946	32.5
800S137-43	0.0451	33	0.503	1.71	4.134	1.033	2.866	0.093	0.430	4.001	0.896	17.70	15.78	1,051	1,051	0.341	1.214	-0.687	0.454	2.978	0.947	32.2
800S137-54	0.0566	33	0.627	2.13	5.110	1.277	2.855	0.112	0.423	5.077	1.179	23.29	21.74	2,091	2,091	0.670	1.478	-0.676	0.448	2.964	0.948	32.0
800S137-54	0.0566	50	0.627	2.13	5.110	1.277	2.855	0.112	0.423	4.974	1.083	32.42	28.47	2,091	2,091	0.670	1.478	-0.676	0.448	2.964	0.948	25.9
800S137-68	0.0713	33	0.782	2.66	6.303	1.576	2.839	0.134	0.414	6.303	1.541	30.45	29.75	4,221	3,367	1.325	1.789	-0.661	0.440	2.944	0.950	31.6
800S137-68	0.0713	50	0.782	2.66	6.303	1.576	2.839	0.134	0.414	6.285	1.468	43.96	39.57	4,221	3,367	1.325	1.789	-0.661	0.440	2.944	0.950	25.6
800S137-97	0.1017	33	1.093	3.72	8.597	2.149	2.805	0.169	0.394	8.597	2.149	53.09[2]	53.09	8,843	4,824	3.767	2.349	-0.630	0.423	2.902	0.953	27.6
800S137-97	0.1017	50	1.093	3.72	8.597	2.149	2.805	0.169	0.394	8.597	2.149	64.35	63.91	10,885	5,938	3.767	2.349	-0.630	0.423	2.902	0.953	25.0
800S162-33[1]	0.0346	33	0.413	1.41	3.582	0.896	2.943	0.125	0.550	3.384	0.710	14.03	12.61	474	474	0.165	1.630	-0.936	0.607	3.137	0.911	40.1
800S162-43	0.0451	33	0.537	1.83	4.633	1.158	2.937	0.160	0.546	4.500	1.019	20.14	18.33	1,051	1,051	0.364	2.076	-0.926	0.601	3.128	0.912	39.8
800S162-54	0.0566	33	0.670	2.28	5.736	1.434	2.927	0.194	0.539	5.702	1.334	26.36	24.98	2,091	2,091	0.715	2.539	-0.914	0.594	3.113	0.914	39.6
800S162-54	0.0566	50	0.670	2.28	5.736	1.434	2.927	0.194	0.539	5.600	1.229	36.79	32.81	2,091	2,091	0.715	2.539	-0.914	0.594	3.113	0.914	32.1
800S162-68	0.0713	33	0.836	2.84	7.089	1.772	2.913	0.235	0.530	7.089	1.737	34.32	33.84	4,221	3,367	1.416	3.093	-0.899	0.586	3.094	0.916	39.3
800S162-68	0.0713	50	0.836	2.84	7.089	1.772	2.913	0.235	0.530	7.070	1.663	49.80	45.11	4,221	3,367	1.416	3.093	-0.899	0.586	3.094	0.916	31.9
800S162-97	0.1017	33	1.169	3.98	9.713	2.428	2.883	0.305	0.510	9.713	2.428	58.27[2]	58.27	8,843	4,824	4.030	4.114	-0.866	0.568	3.053	0.919	35.1
800S162-97	0.1017	50	1.169	3.98	9.713	2.428	2.883	0.305	0.510	9.713	2.428	72.70	71.93	10,885	5,938	4.030	4.114	-0.866	0.568	3.053	0.919	31.4
800S162-118	0.1242	33	1.407	4.79	11.504	2.876	2.860	0.345	0.496	11.504	2.876	71.47[2]	71.47	11,341	4,971	7.234	4.766	-0.842	0.556	3.022	0.922	34.1
800S162-118	0.1242	50	1.407	4.79	11.504	2.876	2.860	0.345	0.496	11.504	2.876	105.23[2]	105.23	16,235	7,115	7.234	4.766	-0.842	0.556	3.022	0.922	28.0
800S200-33[1]	0.0346	33	0.448	1.52	4.096	1.024	3.023	0.227	0.712	4.096	0.816	16.12	14.52	474	474	0.179	2.971	-1.288	0.817	3.363	0.853	50.6
800S200-43	0.0451	33	0.582	1.98	5.302	1.325	3.018	0.292	0.708	5.302	1.293	25.54	20.99	1,051	1,051	0.395	3.797	-1.277	0.811	3.353	0.855	50.3
800S200-54	0.0566	33	0.726	2.47	6.573	1.643	3.009	0.357	0.701	6.573	1.643	35.75[2]	30.37	2,091	2,091	0.775	4.663	-1.265	0.804	3.338	0.856	47.8
800S200-54	0.0566	50	0.726	2.47	6.573	1.643	3.009	0.357	0.701	6.573	1.499	44.87	37.37	2,091	2,091	0.775	4.663	-1.265	0.804	3.338	0.856	40.7
800S200-68	0.0713	33	0.907	3.09	8.140	2.035	2.996	0.435	0.692	8.140	2.035	45.29[2]	41.79	4,221	3,367	1.537	5.712	-1.248	0.796	3.319	0.859	47.0
800S200-68	0.0713	50	0.907	3.09	8.140	2.035	2.996	0.435	0.692	8.140	1.964	65.21[2]	54.70	4,221	3,367	1.537	5.712	-1.248	0.796	3.319	0.859	38.4
800S200-97	0.1017	33	1.271	4.32	11.203	2.801	2.969	0.576	0.673	11.203	2.801	65.12[2]	65.12	8,843	4,824	4.381	7.684	-1.214	0.777	3.278	0.863	45.5
800S200-97	0.1017	50	1.271	4.32	11.203	2.801	2.969	0.576	0.673	11.203	2.801	96.63[2]	89.76	10,885	5,938	4.381	7.684	-1.214	0.777	3.278	0.863	37.2
800S200-118	0.1242	33	1.531	5.21	13.316	3.329	2.949	0.665	0.659	13.316	3.329	79.78[2]	79.78	11,341	4,971	7.872	8.981	-1.188	0.764	3.247	0.866	44.6
800S200-118	0.1242	50	1.531	5.21	13.316	3.329	2.949	0.665	0.659	13.316	3.329	117.95[2]	117.55	16,235	7,115	7.872	8.981	-1.188	0.764	3.247	0.866	36.5
800S250-43	0.0451	33	0.627	2.13	6.015	1.504	3.097	0.500	0.893	6.015	1.313	25.95	22.06	1,051	1,051	0.425	6.374	-1.675	1.043	3.632	0.787	61.5
800S250-54	0.0566	33	0.783	2.66	7.465	1.866	3.088	0.614	0.886	7.465	1.712	33.82	30.07	2,091	2,091	0.836	7.850	-1.661	1.036	3.617	0.789	61.4
800S250-54	0.0566	50	0.783	2.66	7.465	1.866	3.088	0.614	0.886	7.378	1.525	45.66	39.13	2,091	2,091	0.836	7.850	-1.661	1.036	3.617	0.789	49.8
800S250-68	0.0713	33	0.978	3.33	9.261	2.315	3.077	0.752	0.877	9.261	2.220	48.33[2]	43.63	4,221	3,367	1.658	9.652	-1.644	1.027	3.597	0.791	58.2
800S250-68	0.0713	50	0.978	3.33	9.261	2.315	3.077	0.752	0.877	9.240	2.059	61.65	53.75	4,221	3,367	1.658	9.652	-1.644	1.027	3.597	0.791	49.6
800S250-97	0.1017	33	1.372	4.67	12.789	3.197	3.053	1.009	0.857	12.789	3.191	72.07[2]	70.72	8,843	4,824	4.731	13.091	-1.607	1.008	3.555	0.796	56.8
800S250-97	0.1017	50	1.372	4.67	12.789	3.197	3.053	1.009	0.857	12.789	3.054	102.70[2]	93.42	10,885	5,938	4.731	13.091	-1.607	1.008	3.555	0.796	46.4
800S250-118	0.1242	33	1.655	5.63	15.242	3.810	3.035	1.175	0.843	15.242	3.810	88.31[2]	88.31	11,341	4,971	8.511	15.395	-1.580	0.994	3.524	0.799	55.9
800S250-118	0.1242	50	1.655	5.63	15.242	3.810	3.035	1.175	0.843	15.242	3.707	127.51[2]	122.92	16,235	7,115	8.511	15.395	-1.580	0.994	3.524	0.799	45.6

[1] Web-height to thickness ratio exceeds 200. Web Stiffeners are required at all support points and concentrated loads.

[2] Allowable moment includes cold-work of forming.

[3] S Sections with 350 flanges will be substituted with TSN's JamStud® section with 350 flanges and an extra stiffening lip. Refer to TSN's Exterior Wall Catalog for JamStud dimensions and section properties.

Light Steel Framing Members

Structural Stud Section Properties

See Section Properties Table Notes on page 4.

Complies with 2009 & 2012 International Building Code (IBC)

Section	Design Thickness	F_y	Gross Properties							Effective Properties						Torsional						L_u
			Area	Weight	I_x	S_x	R_x	I_y	R_y	I_{xe}	S_{xe}	M_{al}	M_{ad}	V_{ag}	$V_{a\,(net)}$	Jx1000	C_w	X_o	m	R_o	ß	
	(in)	(ksi)	(in^2)	(lb/ft)	(in^4)	(in^3)	(in)	(in^4)	(in)	(in^4)	(in^3)	(in-k)	(in-k)	(lb)	(lb)	(in^4)	(in^6)	(in)	(in)	(in)		(in)
800S300-54	0.0566	33	0.839	2.86	8.358	2.090	3.156	0.960	1.069	8.249	1.785	35.28	31.13	2,091	2,091	0.896	12.076	-2.073	1.271	3.924	0.721	72.2
800S300-54	0.0566	50	0.839	2.86	8.358	2.090	3.156	0.960	1.069	7.862	1.535	45.96	40.22	2,091	2,091	0.896	12.076	-2.073	1.271	3.924	0.721	58.6
800S300-68	0.0713	33	1.050	3.57	10.382	2.595	3.145	1.179	1.060	10.351	2.321	45.86	42.54	4,221	3,367	1.779	14.888	-2.055	1.262	3.903	0.723	72.0
800S300-68	0.0713	50	1.050	3.57	10.382	2.595	3.145	1.179	1.060	10.082	2.145	64.21	55.47	4,221	3,367	1.779	14.888	-2.055	1.262	3.903	0.723	58.4
800S300-97	0.1017	33	1.474	5.02	14.375	3.594	3.123	1.595	1.040	14.375	3.443	76.21[2]	73.25	8,843	4,824	5.082	20.304	-2.017	1.243	3.860	0.727	67.7
800S300-97	0.1017	50	1.474	5.02	14.375	3.594	3.123	1.595	1.040	14.170	3.304	98.92	89.89	10,885	5,938	5.082	20.304	-2.017	1.243	3.860	0.727	58.1
800S300-118	0.1242	33	1.779	6.05	17.167	4.292	3.106	1.871	1.025	17.167	4.168	94.33[2]	95.78	11,341	4,971	9.149	23.979	-1.989	1.229	3.828	0.730	66.8
800S300-118	0.1242	50	1.779	6.05	17.167	4.292	3.106	1.871	1.025	17.022	4.108	138.41[2]	126.69	16,235	7,115	9.149	23.979	-1.989	1.229	3.828	0.730	54.5
800S350-54[3]	0.0566	33	0.938	3.19	9.683	2.421	3.212	1.646	1.325	9.477	2.125	41.98	32.29	2,091	2,091	1.002	22.897	-2.766	1.668	4.441	0.612	90.0
800S350-54[3]	0.0566	50	0.938	3.19	9.683	2.421	3.212	1.646	1.325	9.191	1.869	55.96	49.74	2,091	2,091	1.002	22.897	-2.766	1.668	4.441	0.612	73.1
800S350-68[3]	0.0713	33	1.174	4.00	12.046	3.012	3.203	2.034	1.316	12.046	2.837	56.07	51.89	4,221	3,367	1.990	28.308	-2.748	1.658	4.421	0.614	89.9
800S350-68[3]	0.0713	50	1.174	4.00	12.046	3.012	3.203	2.034	1.316	11.909	2.596	77.73	68.05	4,221	3,367	1.990	28.308	-2.748	1.658	4.421	0.614	72.9
800S350-97[3]	0.1017	33	1.652	5.62	16.737	4.184	3.183	2.784	1.298	16.737	4.101	89.43[2]	87.25	8,843	4,824	5.696	38.834	-2.710	1.639	4.377	0.617	85.4
800S350-97[3]	0.1017	50	1.652	5.62	16.737	4.184	3.183	2.784	1.298	16.737	3.785	113.34	108.67	10,885	5,938	5.696	38.834	-2.710	1.639	4.377	0.617	72.7
800S350-118[3]	0.1242	33	1.997	6.79	20.041	5.010	3.168	3.295	1.285	20.041	5.010	111.44[2]	111.44	11,341	4,971	10.267	46.068	-2.682	1.624	4.345	0.619	84.6
800S350-118[3]	0.1242	50	1.997	6.79	20.041	5.010	3.168	3.295	1.285	20.041	4.762	158.02[2]	150.37	16,235	7,115	10.267	46.068	-2.682	1.624	4.345	0.619	68.9
1000S162-43[1]	0.0451	33	0.627	2.13	8.025	1.605	3.577	0.168	0.518	7.523	1.302	25.74	22.49	836	836	1.658	5.121	-0.798	0.531	3.673	0.953	38.2
1000S162-54	0.0566	33	0.783	2.66	9.950	1.990	3.565	0.204	0.511	9.627	1.722	34.02	31.11	1,661	1,661	1.658	5.121	-0.798	0.531	3.673	0.953	31.0
1000S162-54	0.0566	50	0.783	2.66	9.950	1.990	3.565	0.204	0.511	9.391	1.572	47.07	40.37	1,661	1,661	4.731	6.827	-0.768	0.514	3.631	0.955	37.5
1000S162-68	0.0713	33	0.978	3.33	12.325	2.465	3.550	0.246	0.502	12.256	2.276	44.98	42.91	3,345	3,345	4.731	6.827	-0.768	0.514	3.631	0.955	30.4
1000S162-68	0.0713	50	0.978	3.33	12.325	2.465	3.550	0.246	0.502	11.978	2.154	64.51	56.35	3,345	3,345	8.511	7.924	-0.746	0.502	3.600	0.957	32.9
1000S162-97	0.1017	33	1.372	4.67	16.967	3.393	3.516	0.320	0.483	16.967	3.393	67.06	67.05	8,843	6,434	8.511	7.924	-0.746	0.502	3.600	0.957	30.0
1000S162-97	0.1017	50	1.372	4.67	16.967	3.393	3.516	0.320	0.483	16.967	3.269	97.89	92.56	9,864	7,177	0.456	6.236	-1.147	0.743	3.910	0.914	49.3
1000S162-118	0.1242	33	1.655	5.63	20.169	4.034	3.491	0.363	0.468	20.169	4.034	100.24[2]	100.25	13,189	7,747	0.896	7.665	-1.135	0.737	3.896	0.915	49.1
1000S162-118	0.1242	50	1.655	5.63	20.169	4.034	3.491	0.363	0.468	20.169	4.034	120.77	120.34	16,235	9,536	0.896	7.665	-1.135	0.737	3.896	0.915	39.8
1000S200-43[1]	0.0451	33	0.672	2.29	9.085	1.817	3.676	0.309	0.677	8.602	1.470	29.05	26.14	836	836	1.779	9.401	-1.120	0.729	3.876	0.917	48.8
1000S200-54	0.0566	33	0.839	2.86	11.278	2.256	3.666	0.378	0.671	10.953	1.984	39.20	35.86	1,661	1,661	1.779	9.401	-1.120	0.729	3.876	0.917	39.6
1000S200-54	0.0566	50	0.839	2.86	11.278	2.256	3.666	0.378	0.671	10.769	1.705	51.05	46.62	1,661	1,661	5.082	12.679	-1.088	0.711	3.836	0.920	48.2
1000S200-68	0.0713	33	1.050	3.57	13.994	2.799	3.652	0.460	0.662	13.920	2.607	51.51	49.07	3,345	3,345	5.082	12.679	-1.088	0.711	3.836	0.920	39.0
1000S200-68	0.0713	50	1.050	3.57	13.994	2.799	3.652	0.460	0.662	13.665	2.420	72.46	64.50	3,345	3,345	9.149	14.848	-1.064	0.699	3.805	0.922	43.3
1000S200-97	0.1017	33	1.474	5.02	19.336	3.867	3.622	0.609	0.643	19.336	3.867	76.42	76.24	8,843	6,434	9.149	14.848	-1.064	0.699	3.805	0.922	38.7
1000S200-97	0.1017	50	1.474	5.02	19.336	3.867	3.622	0.609	0.643	19.336	3.741	112.00	104.73	9,864	7,177	0.486	10.481	-1.518	0.965	4.155	0.867	60.7
1000S200-118	0.1242	33	1.779	6.05	23.052	4.610	3.599	0.703	0.629	23.052	4.610	110.50[2]	110.50	13,189	7,747	0.957	12.922	-1.505	0.958	4.140	0.868	60.5
1000S200-118	0.1242	50	1.779	6.05	23.052	4.610	3.599	0.703	0.629	23.052	4.610	138.04	135.74	16,235	9,536	0.957	12.922	-1.505	0.958	4.140	0.868	49.1
1000S250-43[1]	0.0451	33	0.717	2.44	10.203	2.041	3.771	0.531	0.860	10.203	1.617	31.95	27.67	836	836	1.899	15.909	-1.488	0.950	4.121	0.870	57.3
1000S250-54	0.0566	33	0.896	3.05	12.677	2.535	3.762	0.653	0.854	12.677	2.277	44.99	38.02	1,661	1,661	1.899	15.909	-1.488	0.950	4.121	0.870	48.8
1000S250-54	0.0566	50	0.896	3.05	12.677	2.535	3.762	0.653	0.854	12.660	1.879	56.26	49.16	1,661	1,661	5.433	21.632	-1.454	0.932	4.080	0.873	55.8
1000S250-68	0.0713	33	1.121	3.81	15.751	3.150	3.749	0.799	0.844	15.751	3.028	65.93[2]	55.62	3,345	3,345	5.433	21.632	-1.454	0.932	4.080	0.873	45.6
1000S250-68	0.0713	50	1.121	3.81	15.751	3.150	3.749	0.799	0.844	15.741	2.768	82.89	68.13	3,345	3,345	9.788	25.490	-1.428	0.918	4.049	0.876	54.7
1000S250-97	0.1017	33	1.576	5.36	21.827	4.365	3.722	1.072	0.825	21.827	4.357	98.41[2]	91.77	8,843	6,434	9.788	25.490	-1.428	0.918	4.049	0.876	44.8
1000S250-97	0.1017	50	1.576	5.36	21.827	4.365	3.722	1.072	0.825	21.827	4.181	140.63[2]	120.13	9,864	7,177	1.017	19.888	-1.892	1.185	4.408	0.816	71.5
1000S250-118	0.1242	33	1.904	6.48	26.080	5.216	3.701	1.249	0.810	26.080	5.216	120.89[2]	120.71	13,189	7,747	1.017	19.888	-1.892	1.185	4.408	0.816	58.1
1000S250-118	0.1242	50	1.904	6.48	26.080	5.216	3.701	1.249	0.810	26.080	5.082	174.84[2]	159.80	16,235	9,536	9.788	25.490	-1.428	0.918	4.049	0.876	44.7
1000S300-54	0.0566	33	0.953	3.24	14.076	2.815	3.844	1.024	1.037	13.938	2.312	45.69	39.41	1,661	1,661	1.017	19.888	-1.892	1.185	4.408	0.816	71.5
1000S300-54	0.0566	50	0.953	3.24	14.076	2.815	3.844	1.024	1.037	13.440	1.902	56.96	50.69	1,661	1,661	1.017	19.888	-1.892	1.185	4.408	0.816	58.1
1000S300-68	0.0713	33	1.192	4.06	17.509	3.502	3.832	1.258	1.027	17.441	3.158	62.41	54.29	3,345	3,345	2.020	24.551	-1.874	1.176	4.388	0.818	71.3
1000S300-68	0.0713	50	1.192	4.06	17.509	3.502	3.832	1.258	1.027	17.099	2.802	83.89	70.40	3,345	3,345	2.020	24.551	-1.874	1.176	4.388	0.818	57.8
1000S300-97	0.1017	33	1.677	5.71	24.318	4.864	3.808	1.702	1.007	24.318	4.671	103.39[2]	94.70	8,843	6,434	5.783	33.57	-1.838	1.158	4.346	0.821	66.9
1000S300-97	0.1017	50	1.677	5.71	24.318	4.864	3.808	1.702	1.007	23.970	4.499	134.69	115.62	9,864	7,177	5.783	33.57	-1.838	1.158	4.346	0.821	57.4
1000S300-118	0.1242	33	2.028	6.90	29.109	5.822	3.789	1.997	0.992	29.109	5.662	128.16[2]	125.04	13,189	7,747	10.427	39.725	-1.811	1.144	4.315	0.824	65.8
1000S300-118	0.1242	50	2.028	6.90	29.109	5.822	3.789	1.997	0.992	28.861	5.586	188.23[2]	164.19	16,235	9,536	10.427	39.725	-1.811	1.144	4.315	0.824	53.8
1000S350-54[3]	0.0566	33	1.052	3.58	16.220	3.244	3.927	1.768	1.297	15.942	2.772	54.77	48.69	1,661	1,661	1.123	36.575	-2.546	1.566	4.857	0.725	88.9
1000S350-54[3]	0.0566	50	1.052	3.58	16.220	3.244	3.927	1.768	1.297	15.577	2.328	69.69	62.97	1,661	1,661	1.123	36.575	-2.546	1.566	4.857	0.725	72.2
1000S350-68[3]	0.0713	33	1.317	4.48	20.204	4.041	3.917	2.185	1.288	20.204	3.824	75.57	66.40	3,345	3,345	2.232	45.277	-2.529	1.557	4.837	0.727	88.7
1000S350-68[3]	0.0713	50	1.317	4.48	20.204	4.041	3.917	2.185	1.288	20.026	3.417	102.32	86.60	3,345	3,345	2.232	45.277	-2.529	1.557	4.837	0.727	72.0
1000S350-97[3]	0.1017	33	1.855	6.31	28.148	5.630	3.895	2.992	1.270	28.148	5.517	120.33[2]	112.80	8,843	6,434	6.397	62.280	-2.492	1.538	4.795	0.730	84.1
1000S350-97[3]	0.1017	50	1.855	6.31	28.148	5.630	3.895	2.992	1.270	28.148	5.118	153.25	139.74	9,864	7,177	6.397	62.280	-2.492	1.538	4.795	0.730	71.6
1000S350-118[3]	0.1242	33	2.245	7.64	33.772	6.754	3.878	3.543	1.256	33.772	6.754	150.23[2]	147.03	13,189	7,747	11.544	74.030	-2.465	1.524	4.764	0.732	83.1
1000S350-118[3]	0.1242	50	2.245	7.64	33.772	6.754	3.878	3.543	1.256	33.772	6.427	213.25[2]	194.46	16,235	9,536	11.544	74.030	-2.465	1.524	4.764	0.732	67.8

[1] Web-height to thickness ratio exceeds 200. Web Stiffeners are required at all support points and concentrated loads.

[2] Allowable moment includes cold-work of forming.

[3] S Sections with 350 flanges will be substituted with TSN's JamStud® section with 350 flanges and an extra stiffening lip. Refer to TSN's Exterior Wall Catalog for JamStud dimensions and section properties.

Light Steel Framing Members

Structural Stud Section Properties

See Section Properties Table Notes on page 4.

Complies with 2009 & 2012 International Building Code (IBC)

Section	Design Thickness	F_y	Gross Properties							Effective Properties						Torsional						L_u
			Area	Weight	I_x	S_x	R_x	I_y	R_y	I_{xe}	S_{xe}	M_{al}	M_{ad}	V_{ag}	$V_{a\,(net)}$	Jx1000	C_w	X_o	m	R_o	ß	
	(in)	(ksi)	(in²)	(lb/ft)	(in⁴)	(in³)	(in)	(in⁴)	(in)	(in⁴)	(in³)	(in-k)	(in-k)	(lb)	(lb)	(in⁴)	(in⁶)	(in)	(in)	(in)		(in)
1200S162-54[1]	0.0566	33	0.896	3.05	15.730	2.622	4.190	0.212	0.486	14.743	2.109	41.68	36.38	1,377	1,377	0.957	6.340	-0.732	0.493	4.281	0.971	37.5
1200S162-54[1]	0.0566	50	0.896	3.05	15.730	2.622	4.190	0.212	0.486	14.298	1.914	57.31	46.75	1,377	1,377	0.957	6.340	-0.732	0.493	4.281	0.971	30.5
1200S162-68	0.0713	33	1.121	3.81	19.518	3.253	4.173	0.255	0.477	18.955	2.817	55.66	50.95	2,771	2,771	1.899	7.739	-0.719	0.485	4.261	0.972	37.2
1200S162-68	0.0713	50	1.121	3.81	19.518	3.253	4.173	0.255	0.477	18.390	2.645	79.19	66.14	2,771	2,771	1.899	7.739	-0.719	0.485	4.261	0.972	30.2
1200S162-97	0.1017	33	1.576	5.36	26.966	4.494	4.137	0.331	0.459	26.966	4.327	85.51	83.86	8,147	7,411	5.433	10.331	-0.691	0.47	4.219	0.973	36.4
1200S162-97	0.1017	50	1.576	5.36	26.966	4.494	4.137	0.331	0.459	26.735	4.091	122.49	111.30	8,147	7,411	5.433	10.331	-0.691	0.47	4.219	0.973	29.5
1200S162-118	0.1242	33	1.904	6.48	32.145	5.357	4.109	0.376	0.444	32.145	5.357	105.87	105.87	13,189	9,714	9.788	12.002	-0.670	0.459	4.187	0.974	35.8
1200S162-118	0.1242	50	1.904	6.48	32.145	5.357	4.109	0.376	0.444	32.145	5.168	154.74	147.23	14,986	11,037	9.788	12.002	-0.670	0.459	4.187	0.974	29.0
1200S200-54[1]	0.0566	33	0.953	3.24	17.662	2.944	4.306	0.393	0.643	16.678	2.425	47.93	42.47	1,377	1,377	1.017	11.550	-1.032	0.681	4.474	0.947	48.0
1200S200-54[1]	0.0566	50	0.953	3.24	17.662	2.944	4.306	0.393	0.643	16.334	2.073	62.07	54.74	1,377	1,377	1.017	11.550	-1.032	0.681	4.474	0.947	39.0
1200S200-68	0.0713	33	1.192	4.06	21.947	3.658	4.291	0.479	0.634	21.376	3.215	63.54	58.83	2,771	2,771	2.020	14.176	-1.017	0.673	4.455	0.948	47.7
1200S200-68	0.0713	50	1.192	4.06	21.947	3.658	4.291	0.479	0.634	20.864	2.963	88.71	76.55	2,771	2,771	2.020	14.176	-1.017	0.673	4.455	0.948	38.7
1200S200-97	0.1017	33	1.677	5.71	30.417	5.069	4.258	0.635	0.615	30.417	4.899	96.81	95.43	8,147	7,411	5.783	19.150	-0.987	0.656	4.414	0.950	47.0
1200S200-97	0.1017	50	1.677	5.71	30.417	5.069	4.258	0.635	0.615	30.175	4.660	139.51	126.86	8,147	7,411	5.783	19.150	-0.987	0.656	4.414	0.950	38.1
1200S200-118	0.1242	33	2.028	6.90	36.347	6.058	4.234	0.732	0.601	36.347	6.058	119.71	119.71	13,189	9,714	10.427	22.451	-0.964	0.644	4.384	0.952	46.5
1200S200-118	0.1242	50	2.028	6.90	36.347	6.058	4.234	0.732	0.601	36.347	5.865	175.59	166.80	14,986	11,037	10.427	22.451	-0.964	0.644	4.384	0.952	37.7
1200S250-54[1]	0.0566	33	1.009	3.43	19.681	3.280	4.416	0.683	0.823	18.832	2.482	49.05	45.43	1,377	1,377	1.078	19.505	-1.378	0.892	4.699	0.914	59.6
1200S250-54[1]	0.0566	50	1.009	3.43	19.681	3.280	4.416	0.683	0.823	18.433	2.149	64.34	58.39	1,377	1,377	1.078	19.505	-1.378	0.892	4.699	0.914	48.3
1200S250-68	0.0713	33	1.263	4.30	24.484	4.081	4.402	0.836	0.813	23.963	3.496	69.08	62.95	2,771	2,771	2.141	24.034	-1.362	0.884	4.679	0.915	59.2
1200S250-68	0.0713	50	1.263	4.30	24.484	4.081	4.402	0.836	0.813	23.575	3.007	90.04	81.59	2,771	2,771	2.141	24.034	-1.362	0.884	4.679	0.915	48.1
1200S250-97	0.1017	33	1.779	6.05	34.016	5.669	4.373	1.121	0.794	34.016	5.496	108.60	102.52	8,147	7,411	6.134	32.734	-1.329	0.867	4.639	0.918	58.6
1200S250-97	0.1017	50	1.779	6.05	34.016	5.669	4.373	1.121	0.794	33.835	5.037	150.82	135.37	8,147	7,411	6.134	32.734	-1.329	0.867	4.639	0.918	47.5
1200S250-118	0.1242	33	2.152	7.32	40.726	6.788	4.350	1.307	0.779	40.726	6.788	134.13	133.19	13,189	9,714	11.065	38.619	-1.305	0.854	4.608	0.920	58.2
1200S250-118	0.1242	50	2.152	7.32	40.726	6.788	4.350	1.307	0.779	40.726	6.541	195.84	178.57	14,986	11,037	11.065	38.619	-1.305	0.854	4.608	0.920	47.1
1200S300-54[1]	0.0566	33	1.066	3.63	21.699	3.617	4.512	1.074	1.004	21.648	2.736	54.06	47.36	1,377	1,377	1.138	30.051	-1.743	1.111	4.940	0.876	70.8
1200S300-54[1]	0.0566	50	1.066	3.63	21.699	3.617	4.512	1.074	1.004	21.043	2.272	68.04	60.65	1,377	1,377	1.138	30.051	-1.743	1.111	4.940	0.876	57.4
1200S300-68	0.0713	33	1.335	4.54	27.020	4.503	4.499	1.320	0.994	26.918	4.064	80.30	65.72	2,771	2,771	2.262	37.126	-1.726	1.103	4.921	0.877	70.5
1200S300-68	0.0713	50	1.335	4.54	27.020	4.503	4.499	1.320	0.994	26.510	3.317	99.32	84.79	2771	2,771	2.262	37.126	-1.726	1.103	4.921	0.877	57.2
1200S300-97	0.1017	33	1.881	6.40	37.616	6.269	4.472	1.786	0.974	37.616	6.035	133.59[2]	116.06	8,147	7,411	6.484	50.853	-1.691	1.085	4.880	0.880	66.0
1200S300-97	0.1017	50	1.881	6.40	37.616	6.269	4.472	1.786	0.974	37.085	5.831	174.57	141.05	8,147	7,411	6.484	50.853	-1.691	1.085	4.880	0.880	56.7
1200S300-118	0.1242	33	2.276	7.75	45.106	7.518	4.452	2.095	0.959	45.106	7.323	165.76[2]	154.65	13,189	9,714	11.704	60.251	-1.666	1.071	4.849	0.882	64.9
1200S300-118	0.1242	50	2.276	7.75	45.106	7.518	4.452	2.095	0.959	44.727	7.232	243.67[2]	201.68	14,986	11,037	11.704	60.251	-1.666	1.071	4.849	0.882	53.0
1200S350-54[1,3]	0.0566	33	1.165	3.96	24.860	4.143	4.620	1.866	1.266	24.610	3.295	65.12	58.95	1,377	1,377	1.244	54.279	-2.363	1.478	5.341	0.804	88.0
1200S350-54[1,3]	0.0566	50	1.165	3.96	24.860	4.143	4.620	1.866	1.266	24.087	2.787	83.46	75.92	1,377	1,377	1.244	54.279	-2.363	1.478	5.341	0.804	71.4
1200S350-68[3]	0.0713	33	1.460	4.97	30.996	5.166	4.608	2.306	1.257	30.996	4.908	96.98	80.83	2,771	2,771	2.473	67.251	-2.346	1.469	5.322	0.806	87.7
1200S350-68[3]	0.0713	50	1.460	4.97	30.996	5.166	4.608	2.306	1.257	30.916	4.061	121.59	104.89	2,771	2,771	2.473	67.251	-2.346	1.469	5.322	0.806	71.2
1200S350-97[3]	0.1017	33	2.059	7.01	43.269	7.211	4.584	3.159	1.239	43.269	7.071	154.22[2]	138.56	8,147	7,411	7.098	92.672	-2.310	1.450	5.281	0.809	83.0
1200S350-97[3]	0.1017	50	2.059	7.01	43.269	7.211	4.584	3.159	1.239	43.269	6.590	197.31	170.84	8,147	7,411	7.098	92.672	-2.310	1.450	5.281	0.809	70.8
1200S350-118[3]	0.1242	33	2.494	8.48	51.992	8.665	4.566	3.741	1.225	51.992	8.665	192.74[2]	181.90	13,189	9,714	12.821	110.302	-2.284	1.436	5.250	0.811	81.9
1200S350-118[3]	0.1242	50	2.494	8.48	51.992	8.665	4.566	3.741	1.225	51.992	8.260	274.07[2]	238.96	14,986	11,037	12.821	110.302	-2.284	1.436	5.250	0.811	66.9
1400S162-54[1]	0.0566	33	1.009	3.43	23.302	3.329	4.805	0.218	0.464	21.103	2.496	49.32	40.86	1,177	1,177	1.078	8.980	-0.667	0.454	4.873	0.981	36.6
1400S162-54[1]	0.0566	50	1.009	3.43	23.302	3.329	4.805	0.218	0.464	20.365	2.256	67.54	52.13	1,177	1,177	1.078	8.980	-0.667	0.454	4.873	0.981	29.7
1400S162-68	0.0713	33	1.263	4.30	28.952	4.136	4.787	0.262	0.456	27.357	3.357	66.33	57.96	2,365	2,365	2.141	10.966	-0.654	0.447	4.853	0.982	36.2
1400S162-68	0.0713	50	1.263	4.30	28.952	4.136	4.787	0.262	0.456	26.375	3.135	93.85	74.56	2,365	2,365	2.141	10.966	-0.654	0.447	4.853	0.982	29.4
1400S162-97	0.1017	33	1.779	6.05	40.115	5.731	4.748	0.340	0.437	39.965	5.248	103.71	97.69	6,939	6,939	6.134	14.651	-0.628	0.433	4.810	0.983	35.3
1400S162-97	0.1017	50	1.779	6.05	40.115	5.731	4.748	0.340	0.437	38.897	4.915	147.14	127.96	6,939	6,939	6.134	14.651	-0.628	0.433	4.810	0.983	28.7
1400S162-118	0.1242	33	2.152	7.32	47.928	6.847	4.719	0.385	0.423	47.928	6.659	131.59	129.07	12,745	11,287	11.065	17.032	-0.609	0.422	4.777	0.984	34.7
1400S162-118	0.1242	50	2.152	7.32	47.928	6.847	4.719	0.385	0.423	47.772	6.282	188.07	171.63	12,745	11,287	11.065	17.032	-0.609	0.422	4.777	0.984	28.1
1400S200-54[1]	0.0566	33	1.066	3.63	25.951	3.707	4.935	0.406	0.617	23.767	2.866	56.63	48.18	1,177	1,177	1.138	16.355	-0.946	0.633	5.062	0.965	47.0
1400S200-54[1]	0.0566	50	1.066	3.63	25.951	3.707	4.935	0.406	0.617	23.199	2.440	73.05	61.67	1,177	1,177	1.138	16.355	-0.946	0.633	5.062	0.965	38.2
1400S200-68	0.0713	33	1.335	4.54	32.284	4.612	4.918	0.494	0.608	30.684	3.824	75.56	67.50	2,365	2,365	2.262	20.083	-0.932	0.625	5.043	0.966	46.7
1400S200-68	0.0713	50	1.335	4.54	32.284	4.612	4.918	0.494	0.608	29.797	3.505	104.93	87.10	2,365	2,365	2.262	20.083	-0.932	0.625	5.043	0.966	37.9
1400S200-97	0.1017	33	1.881	6.40	44.853	6.408	4.883	0.655	0.590	44.683	5.917	116.93	111.87	6,939	6,939	6.484	27.156	-0.904	0.609	5.001	0.967	45.9
1400S200-97	0.1017	50	1.881	6.40	44.853	6.408	4.883	0.655	0.590	43.616	5.580	167.07	146.98	6,939	6,939	6.484	27.156	-0.904	0.609	5.001	0.967	37.3
1400S200-118	0.1242	33	2.276	7.75	53.698	7.671	4.857	0.755	0.576	53.698	7.480	147.81	146.71	12,745	11,287	11.704	31.861	-0.883	0.598	4.970	0.968	45.4
1400S200-118	0.1242	50	2.276	7.75	53.698	7.671	4.857	0.755	0.576	53.520	7.096	212.47	195.62	12,745	11,287	11.704	31.861	-0.883	0.598	4.970	0.968	36.8

[1] Web-height to thickness ratio exceeds 200. Web Stiffeners are required at all support points and concentrated loads.

[2] Allowable moment includes cold-work of forming.

[3] S Sections with 350 flanges will be substituted with TSN's JamStud® section with 350 flanges and an extra stiffening lip. Refer to TSN's Exterior Wall Catalog for JamStud dimensions and section properties.

Light Steel Framing Members

Structural Stud Section Properties

See Section Properties Table Notes on page 4.

Complies with 2009 & 2012 International Building Code (IBC)

Section	Design Thickness	F_y	Gross Properties							Effective Properties						Torsional						L_u
			Area	Weight	I_x	S_x	R_x	I_y	R_y	I_{xe}	S_{xe}	M_{al}	M_{ad}	V_{ag}	$V_{a\,(net)}$	Jx1000	C_w	X_o	m	R_o	ß	
	(in)	(ksi)	(in^2)	(lb/ft)	(in^4)	(in^3)	(in)	(in^4)	(in)	(in^4)	(in^3)	(in-k)	(in-k)	(lb)	(lb)	(in^4)	(in^6)	(in)	(in)	(in)		(in)
1400S250-54[1]	0.0566	33	1.122	3.82	28.702	4.100	5.057	0.707	0.794	26.758	2.927	57.83	52.08	1,177	1,177	1.198	27.675	-1.272	0.835	5.275	0.942	58.6
1400S250-54[1]	0.0566	50	1.122	3.82	28.702	4.100	5.057	0.707	0.794	26.141	2.527	75.65	66.58	1,177	1,177	1.198	27.675	-1.272	0.835	5.275	0.942	47.6
1400S250-68	0.0713	33	1.406	4.78	35.743	5.106	5.042	0.865	0.784	34.239	4.145	81.90	72.82	2,365	2,365	2.383	34.118	-1.257	0.827	5.255	0.943	58.3
1400S250-68	0.0713	50	1.406	4.78	35.743	5.106	5.042	0.865	0.784	33.565	3.550	106.29	93.79	2,365	2,365	2.383	34.118	-1.257	0.827	5.255	0.943	47.3
1400S250-97	0.1017	33	1.983	6.75	49.764	7.109	5.010	1.160	0.765	49.579	6.611	130.64	120.65	6,939	6,939	6.835	46.520	-1.225	0.811	5.214	0.945	57.6
1400S250-97	0.1017	50	1.983	6.75	49.764	7.109	5.010	1.160	0.765	48.650	6.010	179.95	157.94	6,939	6,939	6.835	46.520	-1.225	0.811	5.214	0.945	46.7
1400S250-118	0.1242	33	2.400	8.17	59.676	8.525	4.986	1.352	0.750	59.676	8.330	164.61	158.62	12,745	11,287	12.342	54.927	-1.203	0.798	5.184	0.946	57.1
1400S250-118	0.1242	50	2.400	8.17	59.676	8.525	4.986	1.352	0.750	59.504	7.881	235.94	210.42	12,745	11,287	12.342	54.927	-1.203	0.798	5.184	0.946	46.2
1400S300-54[1]	0.0566	33	1.179	4.01	31.453	4.493	5.165	1.115	0.972	29.581	3.019	59.66	54.74	1,177	1,177	1.259	42.690	-1.617	1.046	5.499	0.914	69.9
1400S300-54[1]	0.0566	50	1.179	4.01	31.453	4.493	5.165	1.115	0.972	27.227	2.580	77.25	69.82	1,177	1,177	1.259	42.690	-1.617	1.046	5.499	0.914	56.8
1400S300-68	0.0713	33	1.477	5.03	39.201	5.600	5.151	1.370	0.963	37.902	4.236	83.71	76.51	2,365	2,365	2.503	52.772	-1.601	1.038	5.480	0.915	69.6
1400S300-68	0.0713	50	1.477	5.03	39.201	5.600	5.151	1.370	0.963	36.290	3.655	109.42	98.25	2,365	2,365	2.503	52.772	-1.601	1.038	5.480	0.915	56.5
1400S300-97	0.1017	33	2.084	7.09	54.675	7.811	5.122	1.854	0.943	54.574	7.035	139.02	126.99	6,939	6,939	7.186	72.365	-1.568	1.02	5.439	0.917	68.9
1400S300-97	0.1017	50	2.084	7.09	54.675	7.811	5.122	1.854	0.943	53.226	6.372	190.78	165.45	6,939	6,939	7.186	72.365	-1.568	1.02	5.439	0.917	55.9
1400S300-118	0.1242	33	2.525	8.59	65.655	9.379	5.100	2.174	0.928	65.655	9.046	178.75	167.53	12,745	11,287	12.981	85.812	-1.544	1.008	5.408	0.919	68.5
1400S300-118	0.1242	50	2.525	8.59	65.655	9.379	5.100	2.174	0.928	65.570	8.427	252.29	220.81	12,745	11,287	12.981	85.812	-1.544	1.008	5.408	0.919	55.5
1400S350-54[1,3]	0.0566	33	1.278	4.35	35.830	5.119	5.295	1.947	1.234	35.659	3.823	75.54	68.80	1,177	1,177	1.365	76.252	-2.207	1.400	5.868	0.859	87.1
1400S350-54[1,3]	0.0566	50	1.278	4.35	35.830	5.119	5.295	1.947	1.234	33.308	3.249	97.27	88.25	1,177	1,177	1.365	76.252	-2.207	1.400	5.868	0.859	70.7
1400S350-68[3]	0.0713	33	1.602	5.45	44.707	6.387	5.283	2.406	1.226	44.707	5.700	112.64	94.81	2,365	2,365	2.715	94.534	-2.190	1.391	5.848	0.860	86.8
1400S350-68[3]	0.0713	50	1.602	5.45	44.707	6.387	5.283	2.406	1.226	44.707	4.709	141.00	122.49	2,365	2,365	2.715	94.534	-2.190	1.391	5.848	0.860	70.4
1400S350-97[3]	0.1017	33	2.262	7.70	62.507	8.930	5.257	3.296	1.207	62.507	8.762	191.08[2]	163.95	6,939	6,939	7.799	130.43	-2.156	1.373	5.808	0.862	82.0
1400S350-97[3]	0.1017	50	2.262	7.70	62.507	8.930	5.257	3.296	1.207	62.507	8.189	245.18	201.25	6,939	6,939	7.799	130.43	-2.156	1.373	5.808	0.862	70.0
1400S350-118[3]	0.1242	33	2.742	9.33	75.200	10.743	5.237	3.903	1.193	75.200	10.743	238.95[2]	216.66	12,745	11,287	14.099	155.387	-2.130	1.360	5.778	0.864	80.9
1400S350-118[3]	0.1242	50	2.742	9.33	75.200	10.743	5.237	3.903	1.193	75.200	10.260	340.44[2]	282.84	12,745	11,287	14.099	155.387	-2.130	1.360	5.778	0.864	66.1
1600S162-68[1]	0.0713	33	1.406	4.78	40.913	5.114	5.394	0.268	0.436	37.533	3.896	76.99	64.10	2,062	2,062	2.383	14.816	-0.601	0.415	5.445	0.988	35.2
1600S162-68[1]	0.0713	50	1.406	4.78	40.913	5.114	5.394	0.268	0.436	35.986	3.624	108.49	81.87	2,062	2,062	2.383	14.816	-0.601	0.415	5.445	0.988	28.6
1600S162-97	0.1017	33	1.983	6.75	56.824	7.103	5.354	0.347	0.418	55.563	6.173	121.97	110.13	6,043	6,043	6.835	19.807	-0.577	0.401	5.401	0.989	34.4
1600S162-97	0.1017	50	1.983	6.75	56.824	7.103	5.354	0.347	0.418	53.725	5.738	171.79	142.80	6,043	6,043	6.835	19.807	-0.577	0.401	5.401	0.989	27.9
1600S162-118	0.1242	33	2.400	8.17	68.014	8.502	5.323	0.393	0.405	68.014	7.920	156.50	147.57	11,088	11,088	12.342	23.035	-0.559	0.391	5.368	0.989	33.7
1600S162-118	0.1242	50	2.400	8.17	68.014	8.502	5.323	0.393	0.405	66.535	7.399	221.51	193.72	11,088	11,088	12.342	23.035	-0.559	0.391	5.368	0.989	27.3
1600S200-68[1]	0.0713	33	1.477	5.03	45.291	5.661	5.537	0.506	0.585	41.916	4.431	87.56	75.11	2,062	2,062	2.503	27.155	-0.862	0.584	5.634	0.977	45.7
1600S200-68[1]	0.0713	50	1.477	5.03	45.291	5.661	5.537	0.506	0.585	40.523	4.045	121.11	96.27	2,062	2,062	2.503	27.155	-0.862	0.584	5.634	0.977	37.1
1600S200-97	0.1017	33	2.084	7.09	63.050	7.881	5.500	0.670	0.567	61.757	6.938	137.10	126.78	6,043	6,043	7.186	36.744	-0.835	0.569	5.592	0.978	44.9
1600S200-97	0.1017	50	2.084	7.09	63.050	7.881	5.500	0.670	0.567	59.933	6.500	194.61	164.99	6,043	6,043	7.186	36.744	-0.835	0.569	5.592	0.978	36.4
1600S200-118	0.1242	33	2.525	8.59	75.663	9.450	5.472	0.773	0.553	75.601	8.859	175.05	168.39	11,088	11,088	12.981	43.132	-0.815	0.558	5.560	0.979	44.3
1600S200-118	0.1242	50	2.525	8.59	75.663	9.450	5.472	0.773	0.553	74.084	8.331	249.44	221.86	11,088	11,088	12.981	43.132	-0.815	0.558	5.560	0.979	35.9
1600S250-68[1]	0.0713	33	1.549	5.27	49.814	6.227	5.672	0.889	0.758	46.607	4.792	94.70	81.69	2,062	2,062	2.624	46.230	-1.167	0.778	5.840	0.960	57.3
1600S250-68[1]	0.0713	50	1.549	5.27	49.814	6.227	5.672	0.889	0.758	45.550	4.092	122.51	104.63	2,062	2,062	2.624	46.230	-1.167	0.778	5.840	0.960	46.5
1600S250-97	0.1017	33	2.186	7.44	69.476	8.685	5.638	1.192	0.738	68.160	7.728	152.72	137.47	6,043	6,043	7.536	63.082	-1.138	0.762	5.799	0.962	56.5
1600S250-97	0.1017	50	2.186	7.44	69.476	8.685	5.638	1.192	0.738	66.577	6.983	209.06	178.60	6,043	6,043	7.536	63.082	-1.138	0.762	5.799	0.962	45.9
1600S250-118	0.1242	33	2.649	9.01	83.427	10.428	5.612	1.389	0.724	83.427	9.827	194.19	182.65	11,088	11,088	13.620	74.524	-1.116	0.750	5.768	0.963	56.0
1600S250-118	0.1242	50	2.649	9.01	83.427	10.428	5.612	1.389	0.724	81.923	9.222	276.12	240.07	11,088	11,088	13.620	74.524	-1.116	0.750	5.768	0.963	45.4
1600S300-68[1]	0.0713	33	1.620	5.51	54.336	6.792	5.792	1.411	0.933	51.468	4.892	96.68	86.46	2,062	2,062	2.745	71.608	-1.494	0.981	6.054	0.939	68.7
1600S300-68[1]	0.0713	50	1.620	5.51	54.336	6.792	5.792	1.411	0.933	49.107	4.210	126.04	110.58	2,062	2,062	2.745	71.608	-1.494	0.981	6.054	0.939	55.8
1600S300-97	0.1017	33	2.288	7.78	75.903	9.488	5.760	1.909	0.914	74.741	8.203	162.09	145.38	6,043	6,043	7.887	98.275	-1.463	0.964	6.013	0.941	68.0
1600S300-97	0.1017	50	2.288	7.78	75.903	9.488	5.760	1.909	0.914	72.666	7.391	221.28	188.32	6,043	6,043	7.887	98.275	-1.463	0.964	6.013	0.941	55.1
1600S300-118	0.1242	33	2.773	9.44	91.253	11.407	5.737	2.239	0.899	91.253	10.637	210.19	193.46	11,088	11,088	14.258	116.606	-1.439	0.951	5.982	0.942	67.4
1600S300-118	0.1242	50	2.773	9.44	91.253	11.407	5.737	2.239	0.899	89.913	9.835	294.48	253.24	11,088	11,088	14.258	116.606	-1.439	0.951	5.982	0.942	54.7
1600S350-68[1,3]	0.0713	33	1.745	5.94	61.622	7.703	5.943	2.490	1.195	58.537	6.041	119.38	108.05	2,062	2,062	2.957	127.37	-2.055	1.322	6.401	0.897	85.8
1600S350-68[1,3]	0.0713	50	1.745	5.94	61.622	7.703	5.943	2.490	1.195	57.437	5.180	155.08	138.99	2,062	2,062	2.957	127.37	-2.055	1.322	6.401	0.897	69.7
1600S350-97[3]	0.1017	33	2.466	8.39	86.270	10.784	5.915	3.410	1.176	84.926	9.771	193.09	176.65	6,043	6,043	8.501	175.896	-2.022	1.304	6.361	0.899	85.2
1600S350-97[3]	0.1017	50	2.466	8.39	86.270	10.784	5.915	3.410	1.176	83.691	8.382	250.96	230.33	6,043	6,043	8.501	175.896	-2.022	1.304	6.361	0.899	69.1
1600S350-118[3]	0.1242	33	2.990	10.18	103.892	12.987	5.894	4.038	1.162	103.892	12.367	244.38	231.20	11,088	11,088	15.376	209.692	-1.998	1.291	6.331	0.900	84.8
1600S350-118[3]	0.1242	50	2.990	10.18	103.892	12.987	5.894	4.038	1.162	102.530	11.305	338.47	304.57	11,088	11,088	15.376	209.692	-1.998	1.291	6.331	0.900	68.8

[1] Web-height to thickness ratio exceeds 200. Web Stiffeners are required at all support points and concentrated loads.

[2] Allowable moment includes cold-work of forming.

[3] S Sections with 350 flanges will be substituted with TSN's JamStud® section with 350 flanges and an extra stiffening lip. Refer to TSN's Exterior Wall Catalog for JamStud dimensions and section properties.

Track Section Properties

Complies with 2009 & 2012 International Building Code (IBC)

Section Properties Table Notes

1. The centerline bend radius is based on inside corner radii shown in thickness table on page 2.
2. Web Depth for track sections is equal to the nominal height plus 2 times the design thickness plus the bend radius.
3. Hems on non-structural track sections are ignored.
4. Effective properties incorporate the strength increase from the cold work of forming as applicable per AISI A7.2.
5. For deflection calculations, use the effective moment of inertia.
6. 18, 27 and 30 mil track material considered non-structural, based on ASTM C645.
7. See page 2 for additional notes.

Section	Design Thickness	F_y	Gross Properties							Effective Properties				Torsional					
			Area	Weight	I_x	S_x	R_x	I_y	R_y	I_{xe}	S_{xe}	M_a	V_{ag}	Jx1000	C_w	X_o	m	R_o	ß
	(in)	(ksi)	(in²)	(lb/ft)	(in⁴)	(in³)	(in)	(in⁴)	(in)	(in⁴)	(in³)	(in-k)	(lb)	(in⁴)	(in⁶)	(in)	(in)	(in)	
162T125-18	0.0188	33	0.077	0.26	0.041	0.047	0.733	0.013	0.411	0.030	0.025	0.50	302	0.009	0.007	-0.878	0.503	1.215	0.478
162T125-27	0.0283	33	0.117	0.40	0.063	0.072	0.735	0.020	0.410	0.050	0.044	0.87	541	0.031	0.010	-0.872	0.501	1.211	0.482
162T125-30	0.0312	33	0.129	0.44	0.070	0.079	0.735	0.022	0.409	0.057	0.050	1.00	597	0.042	0.012	-0.870	0.500	1.210	0.483
162T125-33	0.0346	33	0.143	0.49	0.077	0.087	0.736	0.024	0.408	0.066	0.058	1.15	663	0.057	0.013	-0.868	0.499	1.209	0.484
250T125-18	0.0188	33	0.094	0.32	0.103	0.079	1.051	0.015	0.400	0.078	0.045	0.90	249	0.011	0.018	-0.769	0.460	1.362	0.681
250T125-27	0.0283	33	0.141	0.48	0.157	0.119	1.053	0.022	0.398	0.129	0.079	1.56	685	0.038	0.027	-0.763	0.457	1.360	0.685
250T125-30	0.0312	33	0.156	0.53	0.173	0.131	1.053	0.025	0.397	0.145	0.090	1.77	832	0.051	0.030	-0.762	0.456	1.359	0.686
250T125-33	0.0346	33	0.173	0.59	0.192	0.145	1.054	0.027	0.397	0.166	0.103	2.03	1,024	0.069	0.033	-0.760	0.456	1.358	0.687
250T125-43	0.0451	33	0.225	0.77	0.250	0.188	1.055	0.035	0.395	0.231	0.147	2.91	1,356	0.153	0.042	-0.755	0.453	1.356	0.690
250T125-54	0.0566	33	0.282	0.96	0.318	0.236	1.062	0.043	0.392	0.310	0.203	4.01	1,692	0.301	0.054	-0.749	0.449	1.357	0.696
250T125-54	0.0566	50	0.282	0.96	0.318	0.236	1.062	0.043	0.392	0.297	0.188	5.64	2,563	0.301	0.054	-0.749	0.449	1.357	0.696
250T125-68	0.0713	33	0.355	1.21	0.408	0.297	1.072	0.054	0.389	0.408	0.281	5.56	2,111	0.602	0.069	-0.740	0.444	1.360	0.704
250T125-68	0.0713	50	0.355	1.21	0.408	0.297	1.072	0.054	0.389	0.402	0.262	7.85	3,199	0.602	0.069	-0.740	0.444	1.360	0.704
250T150-27	0.0283	33	0.156	0.53	0.181	0.137	1.078	0.037	0.486	0.139	0.082	1.61	685	0.042	0.044	-0.976	0.575	1.534	0.595
250T150-30	0.0312	33	0.172	0.58	0.199	0.151	1.078	0.040	0.486	0.157	0.093	1.83	832	0.056	0.049	-0.975	0.574	1.533	0.595
250T150-33	0.0346	33	0.190	0.65	0.221	0.167	1.079	0.045	0.485	0.179	0.107	2.11	1,024	0.076	0.054	-0.973	0.573	1.532	0.596
250T150-43	0.0451	33	0.248	0.84	0.289	0.217	1.080	0.058	0.483	0.252	0.154	3.03	1,356	0.168	0.070	-0.968	0.570	1.529	0.599
250T150-54	0.0566	33	0.311	1.06	0.368	0.273	1.088	0.072	0.481	0.342	0.213	4.22	1,692	0.332	0.089	-0.961	0.566	1.529	0.605
250T150-54	0.0566	50	0.311	1.06	0.368	0.273	1.088	0.072	0.481	0.325	0.197	5.89	2,563	0.332	0.089	-0.961	0.566	1.529	0.605
250T150-68	0.0713	33	0.391	1.33	0.472	0.344	1.099	0.089	0.478	0.465	0.299	5.92	2,111	0.663	0.114	-0.953	0.561	1.531	0.613
250T150-68	0.0713	50	0.391	1.33	0.472	0.344	1.099	0.089	0.478	0.445	0.276	8.27	3,199	0.663	0.114	-0.953	0.561	1.531	0.613
250T200-33	0.0346	33	0.225	0.76	0.280	0.212	1.117	0.097	0.658	0.203	0.112	2.22	1,024	0.090	0.118	-1.418	0.813	1.921	0.455
250T200-43	0.0451	33	0.293	1.00	0.366	0.275	1.118	0.126	0.657	0.288	0.163	3.21	1,356	0.198	0.153	-1.413	0.810	1.918	0.457
250T200-54	0.0566	33	0.367	1.25	0.466	0.346	1.127	0.157	0.654	0.396	0.228	4.51	1,692	0.392	0.195	-1.405	0.806	1.917	0.462
250T200-54	0.0566	50	0.367	1.25	0.466	0.346	1.127	0.157	0.654	0.371	0.209	6.25	2,563	0.392	0.195	-1.405	0.806	1.917	0.462
250T200-68	0.0713	33	0.462	1.57	0.600	0.437	1.139	0.196	0.652	0.548	0.324	6.41	2,111	0.783	0.251	-1.396	0.800	1.916	0.469
250T200-68	0.0713	50	0.462	1.57	0.600	0.437	1.139	0.196	0.652	0.517	0.296	8.86	3,199	0.783	0.251	-1.396	0.800	1.916	0.469
350T125-18	0.0188	33	0.113	0.38	0.219	0.121	1.394	0.016	0.383	0.174	0.063	1.25	175	0.013	0.038	-0.675	0.418	1.595	0.821
350T125-27	0.0283	33	0.170	0.58	0.331	0.182	1.396	0.025	0.381	0.277	0.128	2.53	590	0.045	0.057	-0.670	0.416	1.595	0.823
350T125-30	0.0312	33	0.187	0.64	0.365	0.200	1.396	0.027	0.38	0.312	0.145	2.86	790	0.061	0.063	-0.669	0.415	1.594	0.824
350T125-33	0.0346	33	0.207	0.71	0.405	0.222	1.397	0.030	0.379	0.354	0.165	3.27	1,024	0.083	0.070	-0.668	0.414	1.594	0.824
350T125-43	0.0451	33	0.270	0.92	0.528	0.288	1.397	0.038	0.377	0.490	0.233	4.61	1,739	0.183	0.090	-0.663	0.412	1.592	0.826
350T125-54	0.0566	33	0.339	1.15	0.668	0.361	1.404	0.048	0.375	0.651	0.317	6.26	2,392	0.362	0.114	-0.658	0.408	1.595	0.830
350T125-54	0.0566	50	0.339	1.15	0.668	0.361	1.404	0.048	0.375	0.626	0.297	8.89	3,372	0.362	0.114	-0.658	0.408	1.595	0.830
350T125-68	0.0713	33	0.427	1.45	0.851	0.454	1.412	0.059	0.372	0.851	0.433	8.55	2,994	0.723	0.144	-0.650	0.403	1.599	0.835
350T125-68	0.0713	50	0.427	1.45	0.851	0.454	1.412	0.059	0.372	0.839	0.407	12.18	4,536	0.723	0.144	-0.650	0.403	1.599	0.835
350T150-27	0.0283	33	0.184	0.63	0.377	0.207	1.431	0.041	0.470	0.298	0.132	2.62	590	0.049	0.094	-0.869	0.529	1.739	0.750
350T150-30	0.0312	33	0.203	0.69	0.416	0.228	1.432	0.045	0.469	0.336	0.150	2.96	790	0.066	0.103	-0.867	0.528	1.739	0.751
350T150-33	0.0346	33	0.225	0.76	0.461	0.253	1.432	0.049	0.469	0.382	0.171	3.39	1,024	0.090	0.114	-0.866	0.527	1.738	0.752
350T150-43	0.0451	33	0.293	1.00	0.601	0.328	1.433	0.064	0.467	0.531	0.243	4.80	1,739	0.198	0.148	-0.861	0.525	1.736	0.754
350T150-54	0.0566	33	0.367	1.25	0.761	0.412	1.440	0.079	0.465	0.712	0.332	6.57	2,392	0.392	0.187	-0.855	0.521	1.738	0.758
350T150-54	0.0566	50	0.367	1.25	0.761	0.412	1.440	0.079	0.465	0.679	0.310	9.28	3,372	0.392	0.187	-0.855	0.521	1.738	0.758
350T150-68	0.0713	33	0.462	1.57	0.972	0.518	1.450	0.099	0.462	0.957	0.459	9.07	2,994	0.783	0.238	-0.847	0.516	1.741	0.763
350T150-68	0.0713	50	0.462	1.57	0.972	0.518	1.450	0.099	0.462	0.919	0.428	12.81	4,536	0.783	0.238	-0.847	0.516	1.741	0.763
350T200-33	0.0346	33	0.259	0.88	0.574	0.315	1.487	0.108	0.647	0.428	0.181	3.57	1,024	0.103	0.249	-1.285	0.761	2.069	0.614
350T200-43	0.0451	33	0.338	1.15	0.749	0.409	1.489	0.140	0.645	0.600	0.257	5.09	1,739	0.229	0.323	-1.280	0.758	2.066	0.616
350T200-54	0.0566	33	0.424	1.44	0.949	0.513	1.496	0.175	0.642	0.814	0.355	7.01	2,392	0.453	0.409	-1.273	0.754	2.067	0.621
350T200-54	0.0566	50	0.424	1.44	0.949	0.513	1.496	0.175	0.642	0.770	0.329	9.85	3,372	0.453	0.409	-1.273	0.754	2.067	0.621
350T200-68	0.0713	33	0.534	1.82	1.213	0.647	1.508	0.218	0.639	1.112	0.496	9.80	2,994	0.904	0.522	-1.264	0.749	2.069	0.626
350T200-68	0.0713	50	0.534	1.82	1.213	0.647	1.508	0.218	0.639	1.054	0.458	13.71	4,536	0.904	0.522	-1.264	0.749	2.069	0.626

[1] Web-height to thickness ratio exceeds 200. Web Stiffeners are required at all support points and concentrated loads.

* Allowable moment includes cold-work of forming.

Light Steel Framing Members

Track Section Properties

See Section Properties Table Notes on page 11.

Complies with 2009 & 2012 International Building Code (IBC)

Section	Design Thickness	F_y	Gross Properties							Effective Properties				Torsional					
			Area	Weight	I_x	S_x	R_x	I_y	R_y	I_{xe}	S_{xe}	M_a	V_{ag}	Jx1000	C_w	X_o	m	R_o	ß
	(in)	(ksi)	(in^2)	(lb/ft)	(in^4)	(in^3)	(in)	(in^4)	(in)	(in^4)	(in^3)	(in-k)	(lb)	(in^4)	(in^6)	(in)	(in)	(in)	
362T125-18	0.0188	33	0.115	0.39	0.237	0.126	1.435	0.017	0.38	0.189	0.065	1.29	169	0.014	0.042	-0.665	0.413	1.627	0.833
362T125-27	0.0283	33	0.173	0.59	0.358	0.191	1.438	0.025	0.378	0.301	0.135	2.66	569	0.046	0.062	-0.661	0.411	1.627	0.835
362T125-30	0.0312	33	0.191	0.65	0.395	0.210	1.438	0.027	0.378	0.339	0.152	3.01	762	0.062	0.068	-0.659	0.410	1.626	0.836
362T125-33	0.0346	33	0.212	0.72	0.438	0.232	1.438	0.030	0.377	0.384	0.174	3.44	1,024	0.085	0.076	-0.658	0.409	1.626	0.836
362T125-43	0.0451	33	0.276	0.94	0.571	0.302	1.439	0.039	0.375	0.531	0.245	4.84	1,739	0.187	0.098	-0.654	0.407	1.625	0.838
362T125-54	0.0566	33	0.346	1.18	0.723	0.378	1.445	0.048	0.373	0.705	0.332	6.57	2,480	0.369	0.123	-0.648	0.404	1.627	0.841
362T125-54	0.0566	50	0.346	1.18	0.723	0.378	1.445	0.048	0.373	0.678	0.312	9.34	3,372	0.369	0.123	-0.648	0.404	1.627	0.841
362T125-68	0.0713	33	0.436	1.48	0.921	0.475	1.454	0.060	0.370	0.921	0.453	8.95	3,104	0.738	0.156	-0.641	0.399	1.631	0.846
362T125-68	0.0713	50	0.436	1.48	0.921	0.475	1.454	0.060	0.370	0.907	0.427	12.78	4,703	0.738	0.156	-0.641	0.399	1.631	0.846
362T150-27	0.0283	33	0.187	0.64	0.408	0.217	1.475	0.041	0.468	0.323	0.140	2.76	569	0.050	0.102	-0.857	0.524	1.769	0.765
362T150-30	0.0312	33	0.207	0.70	0.449	0.239	1.475	0.045	0.467	0.364	0.158	3.12	762	0.067	0.112	-0.856	0.523	1.768	0.766
362T150-33	0.0346	33	0.229	0.78	0.499	0.264	1.475	0.050	0.467	0.414	0.180	3.56	1,024	0.091	0.124	-0.854	0.522	1.767	0.766
362T150-43	0.0451	33	0.298	1.02	0.650	0.343	1.476	0.064	0.465	0.574	0.255	5.04	1,739	0.202	0.160	-0.850	0.519	1.766	0.768
362T150-54	0.0566	33	0.374	1.27	0.823	0.431	1.483	0.080	0.462	0.769	0.349	6.89	2,480	0.400	0.202	-0.844	0.516	1.768	0.772
362T150-54	0.0566	50	0.374	1.27	0.823	0.431	1.483	0.080	0.462	0.735	0.325	9.74	3,372	0.400	0.202	-0.844	0.516	1.768	0.772
362T150-68	0.0713	33	0.471	1.60	1.050	0.542	1.492	0.099	0.459	1.034	0.480	9.49	3,104	0.799	0.257	-0.836	0.511	1.771	0.777
362T150-68	0.0713	50	0.471	1.60	1.050	0.542	1.492	0.099	0.459	0.993	0.449	13.43	4,703	0.799	0.257	-0.836	0.511	1.771	0.777
362T200-33	0.0346	33	0.264	0.90	0.619	0.328	1.532	0.110	0.645	0.464	0.190	3.76	1,024	0.105	0.269	-1.270	0.754	2.092	0.631
362T200-43	0.0451	33	0.343	1.17	0.808	0.427	1.534	0.142	0.643	0.649	0.270	5.34	1,739	0.233	0.35	-1.265	0.752	2.090	0.633
362T200-54	0.0566	33	0.431	1.47	1.024	0.536	1.541	0.177	0.64	0.879	0.372	7.35	2,480	0.460	0.442	-1.259	0.748	2.091	0.637
362T200-54	0.0566	50	0.431	1.47	1.024	0.536	1.541	0.177	0.64	0.832	0.345	10.34	3,372	0.460	0.442	-1.259	0.748	2.091	0.637
362T200-68	0.0713	33	0.543	1.85	1.307	0.675	1.552	0.221	0.638	1.199	0.519	10.26	3,104	0.919	0.564	-1.250	0.743	2.093	0.643
362T200-68	0.0713	50	0.543	1.85	1.307	0.675	1.552	0.221	0.638	1.138	0.480	14.37	4,703	0.919	0.564	-1.250	0.743	2.093	0.643
400T125-18[1]	0.0188	33	0.122	0.41	0.297	0.144	1.560	0.017	0.374	0.241	0.072	1.42	153	0.014	0.052	-0.637	0.400	1.726	0.864
400T125-27	0.0283	33	0.184	0.63	0.449	0.217	1.562	0.025	0.372	0.380	0.156	3.08	515	0.049	0.078	-0.633	0.398	1.726	0.866
400T125-30	0.0312	33	0.203	0.69	0.495	0.239	1.562	0.028	0.371	0.427	0.176	3.49	689	0.066	0.085	-0.632	0.397	1.726	0.866
400T125-33	0.0346	33	0.225	0.76	0.549	0.265	1.563	0.031	0.371	0.484	0.201	3.97	940	0.090	0.095	-0.630	0.396	1.725	0.867
400T125-43	0.0451	33	0.293	1.00	0.716	0.344	1.563	0.040	0.369	0.666	0.282	5.57	1,739	0.198	0.122	-0.626	0.394	1.724	0.868
400T125-54	0.0566	33	0.367	1.25	0.904	0.431	1.569	0.049	0.366	0.882	0.381	7.53	2,739	0.392	0.154	-0.621	0.390	1.727	0.871
400T125-54	0.0566	50	0.367	1.25	0.904	0.431	1.569	0.049	0.366	0.849	0.359	10.74	3,372	0.392	0.154	-0.621	0.390	1.727	0.871
400T125-68	0.0713	33	0.462	1.57	1.150	0.541	1.577	0.061	0.363	1.150	0.517	10.22	3,435	0.783	0.194	-0.614	0.386	1.731	0.874
400T125-68	0.0713	50	0.462	1.57	1.150	0.541	1.577	0.061	0.363	1.134	0.488	14.62	5,205	0.783	0.194	-0.614	0.386	1.731	0.874
400T150-27	0.0283	33	0.198	0.67	0.509	0.246	1.602	0.042	0.461	0.409	0.154	3.04	515	0.053	0.127	-0.824	0.509	1.860	0.804
400T150-30	0.0312	33	0.218	0.74	0.561	0.271	1.603	0.046	0.461	0.458	0.183	3.61	689	0.071	0.140	-0.823	0.508	1.859	0.804
400T150-33	0.0346	33	0.242	0.82	0.622	0.300	1.603	0.051	0.460	0.519	0.208	4.12	940	0.097	0.155	-0.821	0.507	1.859	0.805
400T150-43	0.0451	33	0.315	1.07	0.811	0.390	1.604	0.066	0.458	0.719	0.293	5.80	1,739	0.214	0.200	-0.817	0.504	1.857	0.807
400T150-54	0.0566	33	0.396	1.35	1.025	0.489	1.610	0.082	0.456	0.960	0.399	7.89	2,739	0.422	0.252	-0.811	0.501	1.860	0.810
400T150-54	0.0566	50	0.396	1.35	1.025	0.489	1.610	0.082	0.456	0.918	0.374	11.19	3,372	0.422	0.252	-0.811	0.501	1.860	0.810
400T150-68	0.0713	33	0.498	1.69	1.306	0.615	1.619	0.102	0.453	1.286	0.548	10.82	3,435	0.844	0.320	-0.804	0.496	1.864	0.814
400T150-68	0.0713	50	0.498	1.69	1.306	0.615	1.619	0.102	0.453	1.237	0.513	15.35	5,205	0.844	0.320	-0.804	0.496	1.864	0.814
400T200-33	0.0346	33	0.277	0.94	0.768	0.371	1.666	0.113	0.639	0.581	0.220	4.34	940	0.110	0.336	-1.229	0.737	2.166	0.678
400T200-43	0.0451	33	0.360	1.23	1.002	0.482	1.668	0.146	0.637	0.811	0.311	6.14	1,739	0.244	0.436	-1.224	0.734	2.164	0.680
400T200-54	0.0566	33	0.452	1.54	1.268	0.604	1.675	0.182	0.635	1.093	0.426	8.42	2,739	0.483	0.551	-1.217	0.730	2.165	0.684
400T200-54	0.0566	50	0.452	1.54	1.268	0.604	1.675	0.182	0.635	1.037	0.397	11.88	3,372	0.483	0.551	-1.217	0.730	2.165	0.684
400T200-68	0.0713	33	0.569	1.94	1.617	0.761	1.685	0.227	0.632	1.485	0.591	11.68	3,435	0.965	0.702	-1.209	0.725	2.168	0.689
400T200-68	0.0713	50	0.569	1.94	1.617	0.761	1.685	0.227	0.632	1.412	0.549	16.42	5,205	0.965	0.702	-1.209	0.725	2.168	0.689
550T125-18[1,3]	0.0188	33	0.150	0.51	0.627	0.223	2.044	0.018	0.349					0.018	0.108	-0.547	0.354	2.144	0.935
550T125-27	0.0283	33	0.226	0.77	0.948	0.336	2.046	0.027	0.348	0.786	0.192	3.79	372	0.060	0.16	-0.543	0.352	2.145	0.936
550T125-30	0.0312	33	0.250	0.85	1.045	0.370	2.046	0.030	0.347	0.897	0.226	4.47	499	0.081	0.176	-0.542	0.351	2.145	0.936
550T125-33	0.0346	33	0.277	0.94	1.159	0.410	2.046	0.033	0.346	1.029	0.270	5.33	680	0.110	0.195	-0.541	0.350	2.145	0.936
550T125-43	0.0451	33	0.360	1.23	1.510	0.533	2.047	0.043	0.344	1.428	0.416	8.23	1,504	0.244	0.252	-0.537	0.348	2.144	0.937
550T125-54	0.0566	33	0.452	1.54	1.903	0.668	2.052	0.053	0.342	1.862	0.597	11.80	2,739	0.483	0.315	-0.532	0.345	2.147	0.939
550T125-54	0.0566	50	0.452	1.54	1.903	0.668	2.052	0.053	0.342	1.811	0.535	16.01	2,980	0.483	0.315	-0.532	0.345	2.147	0.939
550T125-68	0.0713	33	0.569	1.94	2.412	0.839	2.058	0.066	0.339	2.412	0.807	15.95	4,347	0.965	0.397	-0.526	0.341	2.152	0.940
550T125-68	0.0713	50	0.569	1.94	2.412	0.839	2.058	0.066	0.339	2.379	0.769	23.02	5,350	0.965	0.397	-0.526	0.341	2.152	0.940
550T150-27	0.0283	33	0.241	0.82	1.059	0.376	2.098	0.046	0.436	0.893	0.207	4.10	372	0.064	0.263	-0.716	0.456	2.259	0.900
550T150-30	0.0312	33	0.265	0.90	1.168	0.414	2.098	0.05	0.435	0.995	0.251	4.96	499	0.086	0.289	-0.715	0.455	2.259	0.900
550T150-33	0.0346	33	0.294	1.00	1.295	0.459	2.099	0.055	0.434	1.115	0.310	6.12	680	0.117	0.320	-0.714	0.455	2.259	0.900
550T150-43	0.0451	33	0.383	1.30	1.688	0.596	2.099	0.072	0.432	1.516	0.468	9.25	1,504	0.260	0.414	-0.709	0.452	2.258	0.901
550T150-54	0.0566	33	0.480	1.63	2.128	0.747	2.105	0.089	0.430	2.005	0.628	12.41	2,739	0.513	0.519	-0.704	0.449	2.261	0.903
550T150-54	0.0566	50	0.480	1.63	2.128	0.747	2.105	0.089	0.430	1.928	0.595	17.81	2,980	0.513	0.519	-0.704	0.449	2.261	0.903
550T150-68	0.0713	33	0.605	2.06	2.699	0.939	2.112	0.110	0.427	2.660	0.850	16.80	4,347	1.025	0.655	-0.698	0.445	2.265	0.905
550T150-68	0.0713	50	0.605	2.06	2.699	0.939	2.112	0.110	0.427	2.569	0.804	24.07	5,350	1.025	0.655	-0.698	0.445	2.265	0.905

[1] Web-height to thickness ratio exceeds 200. Web Stiffeners are required at all support points and concentrated loads.

* Allowable moment includes cold-work of forming.

[3] Where web height-to-thickness ratio exceeds 260 or flange width-to-thickness ratio exceeds 60, effective properties are not calculated. See AISI S100 section B1. Application of these products in a non-composite design shall be approved by a design professional.

Light Steel Framing Members

See Section Properties Table Notes on page 11.

Track Section Properties

Complies with 2009 & 2012 International Building Code (IBC)

Section	Design Thickness	F_y	Gross Properties							Effective Properties				Torsional					
			Area	Weight	I_x	S_x	R_x	I_y	R_y	I_{xe}	S_{xe}	M_a	V_{ag}	Jx1000	C_w	X_o	m	R_o	ß
	(in)	(ksi)	(in^2)	(lb/ft)	(in^4)	(in^3)	(in)	(in^4)	(in)	(in^4)	(in^3)	(in-k)	(lb)	(in^4)	(in^6)	(in)	(in)	(in)	
550T200-33	0.0346	33	0.329	1.12	1.567	0.555	2.184	0.123	0.613	1.246	0.307	6.06	680	0.131	0.694	-1.088	0.674	2.516	0.813
550T200-43	0.0451	33	0.428	1.46	2.043	0.722	2.185	0.160	0.611	1.690	0.495	9.79	1,504	0.290	0.900	-1.083	0.671	2.514	0.814
550T200-54	0.0566	33	0.537	1.83	2.578	0.905	2.191	0.199	0.609	2.253	0.669	13.21	2,739	0.573	1.133	-1.077	0.668	2.517	0.817
550T200-54	0.0566	50	0.537	1.83	2.578	0.905	2.191	0.199	0.609	2.153	0.630	18.86	2,980	0.573	1.133	-1.077	0.668	2.517	0.817
550T200-68	0.0713	33	0.676	2.30	3.274	1.139	2.200	0.248	0.606	3.027	0.914	18.06	4,347	1.146	1.434	-1.070	0.663	2.521	0.820
550T200-68	0.0713	50	0.676	2.30	3.274	1.139	2.200	0.248	0.606	2.894	0.857	25.67	5,350	1.146	1.434	-1.070	0.663	2.521	0.820
600T125-18[1,3]	0.0188	33	0.160	0.54	0.776	0.254	2.204	0.019	0.342					0.019	0.132	-0.528	0.347	2.292	0.947
600T125-27[1]	0.0283	33	0.241	0.82	1.168	0.381	2.204	0.028	0.340	0.958	0.210	4.16	341	0.064	0.196	-0.519	0.339	2.290	0.949
600T125-30	0.0312	33	0.265	0.90	1.288	0.419	2.204	0.031	0.340	1.095	0.249	4.92	456	0.086	0.215	-0.518	0.338	2.289	0.949
600T125-33	0.0346	33	0.294	1.00	1.428	0.465	2.204	0.034	0.339	1.258	0.297	5.87	622	0.117	0.238	-0.516	0.337	2.289	0.949
600T125-43	0.0451	33	0.383	1.30	1.861	0.604	2.205	0.044	0.337	1.768	0.461	9.11	1,377	0.260	0.307	-0.513	0.335	2.288	0.950
600T125-54	0.0566	33	0.480	1.63	2.344	0.756	2.209	0.054	0.335	2.299	0.666	13.15	2,728	0.513	0.384	-0.508	0.332	2.291	0.951
600T125-54	0.0566	50	0.480	1.63	2.344	0.756	2.209	0.054	0.335	2.241	0.592	17.73	2,728	0.513	0.384	-0.508	0.332	2.291	0.951
600T125-68	0.0713	33	0.605	2.06	2.969	0.950	2.215	0.067	0.332	2.969	0.916	18.09	4,347	1.025	0.483	-0.503	0.329	2.296	0.952
600T125-68	0.0713	50	0.605	2.06	2.969	0.950	2.215	0.067	0.332	2.934	0.858	25.69	5,350	1.025	0.483	-0.503	0.329	2.296	0.952
600T125-97	0.1017	33	0.862	2.93	4.281	1.347	2.228	0.092	0.326	4.281	1.347	30.43*	7,359	2.973	0.685	-0.491	0.321	2.305	0.955
600T125-97	0.1017	50	0.862	2.93	4.281	1.347	2.228	0.092	0.326	4.281	1.347	40.33	10,885	2.973	0.685	-0.491	0.321	2.305	0.955
600T150-27[1]	0.0283	33	0.255	0.87	1.300	0.424	2.260	0.047	0.427	1.011	0.214	4.23	341	0.068	0.320	-0.686	0.441	2.400	0.918
600T150-30	0.0312	33	0.281	0.96	1.434	0.467	2.260	0.051	0.427	1.159	0.253	5.01	456	0.091	0.352	-0.685	0.440	2.400	0.918
600T150-33	0.0346	33	0.311	1.06	1.590	0.517	2.260	0.057	0.426	1.334	0.303	5.99	622	0.124	0.390	-0.684	0.439	2.399	0.919
600T150-43	0.0451	33	0.405	1.38	2.072	0.673	2.261	0.073	0.424	1.890	0.474	9.36	1,377	0.275	0.504	-0.680	0.437	2.398	0.920
600T150-54	0.0566	33	0.509	1.73	2.611	0.843	2.266	0.091	0.422	2.473	0.689	13.62	2,728	0.543	0.632	-0.675	0.434	2.401	0.921
600T150-54	0.0566	50	0.509	1.73	2.611	0.843	2.266	0.091	0.422	2.400	0.609	18.24	2,728	0.543	0.632	-0.675	0.434	2.401	0.921
600T150-68	0.0713	33	0.641	2.18	3.309	1.059	2.273	0.113	0.419	3.262	0.963	19.03	4,347	1.086	0.797	-0.669	0.430	2.406	0.923
600T150-68	0.0713	50	0.641	2.18	3.309	1.059	2.273	0.113	0.419	3.162	0.891	26.68	5,350	1.086	0.797	-0.669	0.430	2.406	0.923
600T150-97	0.1017	33	0.913	3.11	4.778	1.504	2.288	0.156	0.413	4.778	1.504	29.71	7,359	3.148	1.138	-0.656	0.421	2.415	0.926
600T150-97	0.1017	50	0.913	3.11	4.778	1.504	2.288	0.156	0.413	4.778	1.444	43.23	10,885	3.148	1.138	-0.656	0.421	2.415	0.926
600T200-33	0.0346	33	0.346	1.18	1.913	0.622	2.352	0.126	0.604	1.542	0.333	6.59	622	0.138	0.847	-1.048	0.655	2.645	0.843
600T200-43	0.0451	33	0.451	1.53	2.494	0.809	2.353	0.163	0.602	2.076	0.565	11.16	1,377	0.305	1.098	-1.044	0.652	2.643	0.844
600T200-54	0.0566	33	0.565	1.92	3.145	1.015	2.359	0.203	0.600	2.759	0.759	15.00	2,728	0.604	1.381	-1.038	0.649	2.646	0.846
600T200-54	0.0566	50	0.565	1.92	3.145	1.015	2.359	0.203	0.600	2.641	0.717	21.48	2,728	0.604	1.381	-1.038	0.649	2.646	0.846
600T200-68	0.0713	33	0.712	2.42	3.990	1.277	2.367	0.254	0.597	3.696	1.034	20.42	4,347	1.206	1.746	-1.031	0.644	2.650	0.849
600T200-68	0.0713	50	0.712	2.42	3.990	1.277	2.367	0.254	0.597	3.540	0.973	29.12	5,350	1.206	1.746	-1.031	0.644	2.650	0.849
600T200-97	0.1017	33	1.015	3.45	5.773	1.816	2.385	0.354	0.591	5.758	1.667	32.95	7,359	3.499	2.510	-1.016	0.635	2.659	0.854
600T200-97	0.1017	50	1.015	3.45	5.773	1.816	2.385	0.354	0.591	5.558	1.568	46.94	10,885	3.499	2.510	-1.016	0.635	2.659	0.854
800T125-33[1]	0.0346	33	0.363	1.24	2.895	0.711	2.824	0.036	0.313	2.441	0.407	8.03	465	0.145	0.456	-0.439	0.294	2.875	0.977
800T125-43	0.0451	33	0.473	1.61	3.773	0.924	2.824	0.046	0.311	3.484	0.640	12.65	1,030	0.321	0.589	-0.436	0.292	2.874	0.977
800T125-54	0.0566	33	0.594	2.02	4.745	1.158	2.827	0.057	0.309	4.668	0.940	18.58	2,039	0.634	0.735	-0.432	0.289	2.877	0.977
800T125-54	0.0566	50	0.594	2.02	4.745	1.158	2.827	0.057	0.309	4.426	0.824	24.66	2,039	0.634	0.735	-0.432	0.289	2.877	0.977
800T125-68	0.0713	33	0.748	2.54	5.998	1.454	2.833	0.070	0.306	5.998	1.356	26.80	4,087	1.267	0.920	-0.427	0.286	2.881	0.978
800T125-68	0.0713	50	0.748	2.54	5.998	1.454	2.833	0.070	0.306	5.956	1.216	36.39	4,087	1.267	0.920	-0.427	0.286	2.881	0.978
800T125-97	0.1017	33	1.066	3.63	8.613	2.062	2.843	0.096	0.301	8.613	2.062	40.74	8,843	3.674	1.296	-0.417	0.279	2.889	0.979
800T125-97	0.1017	50	1.066	3.63	8.613	2.062	2.843	0.096	0.301	8.613	2.062	61.72	10,885	3.674	1.296	-0.417	0.279	2.889	0.979
800T150-33[1]	0.0346	33	0.380	1.29	3.180	0.781	2.891	0.06	0.397	2.569	0.414	8.18	465	0.152	0.751	-0.588	0.388	2.977	0.961
800T150-43	0.0451	33	0.496	1.69	4.144	1.015	2.891	0.077	0.395	3.689	0.655	12.95	1,030	0.336	0.972	-0.584	0.386	2.976	0.961
800T150-54	0.0566	33	0.622	2.12	5.214	1.272	2.896	0.096	0.393	4.976	0.969	19.15	2,039	0.664	1.215	-0.580	0.383	2.979	0.962
800T150-54	0.0566	50	0.622	2.12	5.214	1.272	2.896	0.096	0.393	4.692	0.844	25.27	2,039	0.664	1.215	-0.580	0.383	2.979	0.962
800T150-68	0.0713	33	0.783	2.67	6.594	1.599	2.902	0.119	0.390	6.527	1.412	27.91	4,087	1.327	1.526	-0.575	0.379	2.984	0.963
800T150-68	0.0713	50	0.783	2.67	6.594	1.599	2.902	0.119	0.390	6.361	1.255	37.58	4,087	1.327	1.526	-0.575	0.379	2.984	0.963
800T150-97	0.1017	33	1.116	3.80	9.479	2.269	2.914	0.165	0.384	9.479	2.269	44.83	8,843	3.849	2.162	-0.564	0.372	2.993	0.965
800T150-97	0.1017	50	1.116	3.80	9.479	2.269	2.914	0.165	0.384	9.479	2.192	65.62	10,885	3.849	2.162	-0.564	0.372	2.993	0.965
800T200-33[1]	0.0346	33	0.415	1.41	3.749	0.921	3.005	0.135	0.571	2.788	0.424	8.37	465	0.166	1.638	-0.917	0.589	3.194	0.918
800T200-43	0.0451	33	0.541	1.84	4.887	1.197	3.006	0.175	0.569	4.043	0.676	13.35	1,030	0.367	2.124	-0.913	0.587	3.193	0.918
800T200-54	0.0566	33	0.679	2.31	6.152	1.501	3.011	0.218	0.567	5.505	1.009	19.93	2,039	0.725	2.664	-0.908	0.584	3.196	0.919
800T200-54	0.0566	50	0.679	2.31	6.152	1.501	3.011	0.218	0.567	5.149	0.871	26.09	2,039	0.725	2.664	-0.908	0.584	3.196	0.919
800T200-68	0.0713	33	0.854	2.91	7.786	1.888	3.019	0.272	0.564	7.306	1.490	29.45	4,087	1.448	3.357	-0.902	0.580	3.201	0.921
800T200-68	0.0713	50	0.854	2.91	7.786	1.888	3.019	0.272	0.564	7.051	1.310	39.22	4,087	1.448	3.357	-0.902	0.580	3.201	0.921
800T200-97	0.1017	33	1.218	4.15	11.212	2.683	3.034	0.379	0.558	11.176	2.491	49.22	8,843	4.200	4.792	-0.889	0.571	3.210	0.923
800T200-97	0.1017	50	1.218	4.15	11.212	2.683	3.034	0.379	0.558	10.833	2.347	70.27	10,885	4.200	4.792	-0.889	0.571	3.210	0.923
1000T125-43[1]	0.0451	33	0.563	1.92	6.630	1.305	3.431	0.047	0.290	5.886	0.819	16.19	822	0.382	0.973	-0.379	0.259	3.464	0.988
1000T125-54	0.0566	33	0.707	2.41	8.333	1.634	3.434	0.059	0.288	7.960	1.216	24.03	1,628	0.755	1.212	-0.376	0.256	3.466	0.988
1000T125-54	0.0566	50	0.707	2.41	8.333	1.634	3.434	0.059	0.288	7.479	1.055	31.59	1,628	0.755	1.212	-0.376	0.256	3.466	0.988
1000T125-68	0.0713	33	0.890	3.03	10.522	2.053	3.438	0.073	0.286	10.452	1.781	35.19	3,261	1.508	1.515	-0.372	0.253	3.470	0.989
1000T125-68	0.0713	50	0.890	3.03	10.522	2.053	3.438	0.073	0.286	10.155	1.575	47.15	3,261	1.508	1.515	-0.372	0.253	3.470	0.989
1000T125-97	0.1017	33	1.269	4.32	15.077	2.912	3.447	0.100	0.280	15.077	2.907	57.44	8,843	4.375	2.123	-0.363	0.247	3.477	0.989
1000T125-97	0.1017	50	1.269	4.32	15.077	2.912	3.447	0.100	0.280	15.077	2.753	82.42	9,507	4.375	2.123	-0.363	0.247	3.477	0.989

[1] Web-height to thickness ratio exceeds 200. Web Stiffeners are required at all support points and concentrated loads.

* Allowable moment includes cold-work of forming.

[3] Where web height-to-thickness ratio exceeds 260 or flange width-to-thickness ratio exceeds 60, effective properties are not calculated. See AISI S100 section B1. Application of these products in a non-composite design shall be approved by a design professional.

Light Steel Framing Members

Track Section Properties

See Section Properties Table Notes on page 11.

Complies with 2009 & 2012 International Building Code (IBC)

Section	Design Thickness	F_y	Gross Properties							Effective Properties				Torsional					
			Area	Weight	I_x	S_x	R_x	I_y	R_y	I_{xe}	S_{xe}	M_a	V_{ag}	Jx1000	C_w	X_o	m	R_o	ß
	(in)	(ksi)	(in^2)	(lb/ft)	(in^4)	(in^3)	(in)	(in^4)	(in)	(in^4)	(in^3)	(in-k)	(lb)	(in^4)	(in^6)	(in)	(in)	(in)	
1000T150-43[1]	0.0451	33	0.586	1.99	7.207	1.419	3.507	0.080	0.370	6.195	0.837	16.54	822	0.397	1.612	-0.513	0.345	3.564	0.979
1000T150-54	0.0566	33	0.735	2.50	9.061	1.777	3.511	0.100	0.368	8.430	1.249	24.69	1,628	0.785	2.013	-0.509	0.342	3.567	0.980
1000T150-54	0.0566	50	0.735	2.50	9.061	1.777	3.511	0.100	0.368	7.880	1.079	32.29	1,628	0.785	2.013	-0.509	0.342	3.567	0.980
1000T150-68	0.0713	33	0.926	3.15	11.445	2.233	3.516	0.124	0.366	11.342	1.846	36.48	3,261	1.569	2.522	-0.505	0.339	3.571	0.980
1000T150-68	0.0713	50	0.926	3.15	11.445	2.233	3.516	0.124	0.366	10.774	1.621	48.53	3,261	1.569	2.522	-0.505	0.339	3.571	0.980
1000T150-97	0.1017	33	1.320	4.49	16.413	3.170	3.526	0.171	0.360	16.413	3.165	62.54	8,843	4.550	3.557	-0.495	0.332	3.579	0.981
1000T150-97	0.1017	50	1.320	4.49	16.413	3.170	3.526	0.171	0.360	16.413	2.902	86.90	9,507	4.550	3.557	-0.495	0.332	3.579	0.981
1000T200-43[1]	0.0451	33	0.631	2.15	8.361	1.646	3.640	0.183	0.539	6.722	0.861	17.01	822	0.428	3.540	-0.813	0.534	3.769	0.953
1000T200-54	0.0566	33	0.792	2.69	10.516	2.062	3.645	0.228	0.537	9.231	1.295	25.60	1,628	0.845	4.434	-0.809	0.531	3.772	0.954
1000T200-54	0.0566	50	0.792	2.69	10.516	2.062	3.645	0.228	0.537	8.560	1.111	33.26	1,628	0.845	4.434	-0.809	0.531	3.772	0.954
1000T200-68	0.0713	33	0.997	3.39	13.292	2.594	3.651	0.284	0.534	12.551	1.936	38.26	3,261	1.690	5.576	-0.803	0.527	3.776	0.955
1000T200-68	0.0713	50	0.997	3.39	13.292	2.594	3.651	0.284	0.534	11.820	1.684	50.42	3,261	1.690	5.576	-0.803	0.527	3.776	0.955
1000T200-97	0.1017	33	1.422	4.84	19.087	3.686	3.664	0.397	0.528	19.031	3.427	67.72	8,843	4.901	7.924	-0.791	0.519	3.786	0.956
1000T200-97	0.1017	50	1.422	4.84	19.087	3.686	3.664	0.397	0.528	18.583	3.081	92.25	9,507	4.901	7.924	-0.791	0.519	3.786	0.956
1200T125-54[1]	0.0566	33	0.820	2.79	13.335	2.186	4.033	0.060	0.271	12.296	1.491	29.47	1,354	0.876	1.820	-0.333	0.230	4.055	0.993
1200T125-54[1]	0.0566	50	0.820	2.79	13.335	2.186	4.033	0.060	0.271	11.460	1.286	38.51	1,354	0.876	1.820	-0.333	0.230	4.055	0.993
1200T125-68	0.0713	33	1.033	3.51	16.826	2.747	4.036	0.074	0.268	16.246	2.206	43.60	2,713	1.750	2.270	-0.329	0.227	4.059	0.993
1200T125-68	0.0713	50	1.033	3.51	16.826	2.747	4.036	0.074	0.268	15.686	1.934	57.90	2,713	1.750	2.270	-0.329	0.227	4.059	0.993
1200T125-97	0.1017	33	1.472	5.01	24.078	3.897	4.044	0.102	0.263	24.078	3.690	72.92	7,902	5.076	3.171	-0.322	0.222	4.065	0.994
1200T125-97	0.1017	50	1.472	5.01	24.078	3.897	4.044	0.102	0.263	23.751	3.442	103.06	7,902	5.076	3.171	-0.322	0.222	4.065	0.994
1200T150-54[1]	0.0566	33	0.848	2.89	14.378	2.357	4.117	0.103	0.348	12.962	1.530	30.23	1,354	0.906	3.033	-0.454	0.310	4.156	0.988
1200T150-54[1]	0.0566	50	0.848	2.89	14.378	2.357	4.117	0.103	0.348	12.020	1.313	39.31	1,354	0.906	3.033	-0.454	0.310	4.156	0.988
1200T150-68	0.0713	33	1.068	3.64	18.148	2.963	4.121	0.127	0.345	17.568	2.281	45.08	2,713	1.810	3.795	-0.450	0.307	4.160	0.988
1200T150-68	0.0713	50	1.068	3.64	18.148	2.963	4.121	0.127	0.345	16.566	1.987	59.48	2,713	1.810	3.795	-0.450	0.307	4.160	0.988
1200T150-97	0.1017	33	1.523	5.18	25.987	4.206	4.130	0.176	0.340	25.987	3.996	78.97	7,902	5.252	5.335	-0.441	0.301	4.168	0.989
1200T150-97	0.1017	50	1.523	5.18	25.987	4.206	4.130	0.176	0.340	25.719	3.616	108.27	7,902	5.252	5.335	-0.441	0.301	4.168	0.989
1200T200-54[1]	0.0566	33	0.905	3.08	16.464	2.699	4.265	0.236	0.510	14.078	1.582	31.26	1,354	0.966	6.714	-0.730	0.487	4.357	0.972
1200T200-54[1]	0.0566	50	0.905	3.08	16.464	2.699	4.265	0.236	0.510	12.962	1.350	40.41	1,354	0.966	6.714	-0.730	0.487	4.357	0.972
1200T200-68	0.0713	33	1.140	3.88	20.791	3.395	4.271	0.294	0.508	19.277	2.383	47.09	2,713	1.931	8.431	-0.725	0.483	4.362	0.972
1200T200-68	0.0713	50	1.140	3.88	20.791	3.395	4.271	0.294	0.508	18.026	2.058	61.62	2,713	1.931	8.431	-0.725	0.483	4.362	0.972
1200T200-97	0.1017	33	1.625	5.53	29.805	4.824	4.283	0.410	0.502	29.805	4.298	84.93	7,902	5.602	11.945	-0.714	0.476	4.371	0.973
1200T200-97	0.1017	50	1.625	5.53	29.805	4.824	4.283	0.410	0.502	28.959	3.819	114.35	7,902	5.602	11.945	-0.714	0.476	4.371	0.973
1400T125-54[1]	0.0566	33	0.933	3.18	19.977	2.814	4.627	0.061	0.256	17.725	1.767	34.91	1,160	0.997	2.559	-0.299	0.209	4.643	0.996
1400T125-54[1]	0.0566	50	0.933	3.18	19.977	2.814	4.627	0.061	0.256	16.407	1.517	45.42	1,160	0.997	2.559	-0.299	0.209	4.643	0.996
1400T125-68	0.0713	33	1.175	4.00	25.196	3.536	4.630	0.076	0.254	23.552	2.632	52.01	2,322	1.992	3.189	-0.296	0.206	4.646	0.996
1400T125-68	0.0713	50	1.175	4.00	25.196	3.536	4.630	0.076	0.254	22.620	2.293	68.64	2,322	1.992	3.189	-0.296	0.206	4.646	0.996
1400T125-97	0.1017	33	1.676	5.70	36.024	5.019	4.636	0.104	0.249	35.775	4.480	88.53	6,761	5.778	4.445	-0.289	0.201	4.652	0.996
1400T125-97	0.1017	50	1.676	5.70	36.024	5.019	4.636	0.104	0.249	34.588	4.134	123.76	6,761	5.778	4.445	-0.289	0.201	4.652	0.996
1400T125-118	0.1242	33	2.046	6.96	44.068	6.106	4.641	0.123	0.245	43.752	5.453	163.27	12,344	10.520	5.334	-0.284	0.197	4.656	0.996
1400T150-54[1]	0.0566	33	0.962	3.27	21.392	3.013	4.717	0.105	0.330	18.620	1.810	35.76	1,160	1.027	4.280	-0.410	0.283	4.746	0.993
1400T150-54[1]	0.0566	50	0.962	3.27	21.392	3.013	4.717	0.105	0.330	17.153	1.547	46.33	1,160	1.027	4.280	-0.410	0.283	4.746	0.993
1400T150-68	0.0713	33	1.211	4.12	26.987	3.788	4.721	0.130	0.327	25.409	2.717	53.68	2,322	2.052	5.349	-0.407	0.280	4.749	0.993
1400T150-68	0.0713	50	1.211	4.12	26.987	3.788	4.721	0.130	0.327	23.803	2.352	70.42	2,322	2.052	5.349	-0.407	0.280	4.749	0.993
1400T150-97	0.1017	33	1.727	5.88	38.607	5.379	4.729	0.180	0.322	38.340	4.834	95.52	6,761	5.953	7.503	-0.399	0.275	4.756	0.993
1400T150-97	0.1017	50	1.727	5.88	38.607	5.379	4.729	0.180	0.322	37.285	4.332	129.69	6,761	5.953	7.503	-0.399	0.275	4.756	0.993
1400T150-118	0.1242	50	2.108	7.17	47.247	6.546	4.734	0.214	0.319	46.911	5.887	176.24	12,344	10.839	9.048	-0.393	0.270	4.761	0.993
1400T200-54[1]	0.0566	33	1.018	3.46	24.221	3.412	4.878	0.242	0.487	20.098	1.868	36.92	1,160	1.087	9.520	-0.665	0.449	4.947	0.982
1400T200-54[1]	0.0566	50	1.018	3.46	24.221	3.412	4.878	0.242	0.487	18.387	1.589	47.56	1,160	1.087	9.520	-0.665	0.449	4.947	0.982
1400T200-68	0.0713	33	1.282	4.36	30.571	4.291	4.883	0.301	0.485	27.707	2.830	55.93	2,322	2.173	11.942	-0.661	0.446	4.951	0.982
1400T200-68	0.0713	50	1.282	4.36	30.571	4.291	4.883	0.301	0.485	25.738	2.432	72.81	2,322	2.173	11.942	-0.661	0.446	4.951	0.982
1400T200-97	0.1017	33	1.828	6.22	43.773	6.098	4.893	0.420	0.479	43.679	5.174	102.24	6,761	6.304	16.883	-0.651	0.439	4.959	0.983
1400T200-97	0.1017	50	1.828	6.22	43.773	6.098	4.893	0.420	0.479	41.749	4.559	136.48	6,761	6.304	16.883	-0.651	0.439	4.959	0.983
1400T200-118	0.1242	50	2.232	7.60	53.606	7.427	4.900	0.504	0.475	53.453	6.354	190.23	12,344	11.478	20.479	-0.644	0.434	4.965	0.983
1600T125-68	0.0713	33	1.318	4.48	35.916	4.421	5.220	0.077	0.241	32.443	3.058	60.42	2,030	2.233	4.273	-0.268	0.189	5.233	0.997
1600T125-68	0.0713	50	1.318	4.48	35.916	4.421	5.220	0.077	0.241	31.004	2.651	79.37	2,030	2.233	4.273	-0.268	0.189	5.233	0.997
1600T125-97	0.1017	33	1.879	6.39	51.322	6.276	5.226	0.105	0.237	49.844	5.273	104.19	5,908	6.479	5.945	-0.262	0.184	5.238	0.997
1600T125-97	0.1017	50	1.879	6.39	51.322	6.276	5.226	0.105	0.237	47.830	4.825	144.47	5,908	6.479	5.945	-0.262	0.184	5.238	0.997
1600T125-118	0.1242	50	2.294	7.81	62.755	7.637	5.230	0.125	0.233	60.930	6.420	192.21	10,783	11.797	7.126	-0.257	0.181	5.241	0.998
1600T150-68	0.0713	33	1.354	4.61	38.249	4.708	5.316	0.132	0.312	34.945	3.152	62.28	2,030	2.294	7.188	-0.371	0.258	5.338	0.995
1600T150-68	0.0713	50	1.354	4.61	38.249	4.708	5.316	0.132	0.312	32.537	2.717	81.34	2,030	2.294	7.188	-0.371	0.258	5.338	0.995
1600T150-97	0.1017	33	1.930	6.57	54.681	6.686	5.323	0.182	0.307	53.172	5.674	112.12	5,908	6.654	10.066	-0.363	0.253	5.344	0.995
1600T150-97	0.1017	50	1.930	6.57	54.681	6.686	5.323	0.182	0.307	51.382	5.047	151.11	5,908	6.654	10.066	-0.363	0.253	5.344	0.995
1600T150-118	0.1242	50	2.357	8.02	66.886	8.140	5.328	0.218	0.304	65.023	6.911	206.91	10,783	12.117	12.124	-0.358	0.249	5.348	0.996
1600T200-68	0.0713	33	1.425	4.85	42.914	5.282	5.488	0.307	0.464	37.904	3.277	64.76	2,030	2.415	16.123	-0.607	0.414	5.541	0.988
1600T200-68	0.0713	50	1.425	4.85	42.914	5.282	5.488	0.307	0.464	35.009	2.805	83.99	2,030	2.415	16.123	-0.607	0.414	5.541	0.988
1600T200-97	0.1017	33	2.032	6.91	61.398	7.508	5.497	0.428	0.459	60.199	6.052	119.60	5,908	7.005	22.755	-0.598	0.408	5.549	0.988
1600T200-97	0.1017	50	2.032	6.91	61.398	7.508	5.497	0.428	0.459	57.292	5.298	158.62	5,908	7.005	22.755	-0.598	0.408	5.549	0.988
1600T200-118	0.1242	50	2.481	8.44	75.146	9.145	5.504	0.514	0.455	73.613	7.433	222.53	10,783	12.755	27.568	-0.592	0.403	5.554	0.989

[1] Web-height to thickness ratio exceeds 200. Web Stiffeners are required at all support points and concentrated loads.

[2] Allowable moment includes cold-work of forming.

[3] Where web height-to-thickness ratio exceeds 260 or flange width-to-thickness ratio exceeds 60, effective properties are not calculated. See AISI S100 section B1. Application of these products in a non-composite design shall be approved by a design professional.

Limiting Wall Heights

Interior Non-Structural Non-Composite

Complies with 2009 & 2012 International Building Code (IBC)

Interior Non-Structural Non-Composite Table Notes

1. 5 pounds per square foot (psf), 7.5 psf, and 10 psf loads have NOT been reduced for strength or deflection checks: full lateral load is applied.
2. Limiting heights are based on steel properties only (noncomposite) without the contribution of sheathing to strength and stiffness of the assembly. Properly fastened sheathing is still required for members to be considered fully braced.
3. Web crippling check based on 1" end bearing.
4. Allowable moment is the lesser of M_{al} and M_{ad}. Stud distortional buckling based on an assumed $K_{\phi} = 0$.
5. See page 2 for additional notes.

Section	F_y	Spacing	5 psf			7.5 psf			10 psf		
	(ksi)	(in) oc	L/120	L/240	L/360	L/120	L/240	L/360	L/120	L/240	L/360
162S125-18	33	12	9' 0"	7' 8"	6' 8"	7' 4"	6' 8"	5' 10"	6' 4"	6' 1"	5' 4"
162S125-18	33	16	7' 9"	6' 11"	6' 1"	6' 4"	6' 1"	5' 4"	5' 6"	5' 6"	4' 10"
162S125-18	33	24	6' 4"	6' 1"	5' 4"	5' 2"	5' 2"	4' 8"	4' 6"	4' 6"	4' 3"
162S125-27	33	12	11' 3"	8' 11"	7' 10"	9' 8"	7' 10"	6' 10"	8' 4"	7' 1"	6' 3"
162S125-27	33	16	10' 3"	8' 2"	7' 1"	8' 4"	7' 1"	6' 3"	7' 3"	6' 5"	5' 8"
162S125-27	33	24	8' 4"	7' 1"	6' 3"	6' 10"	6' 3"	5' 5"	5' 11"	5' 8"	4' 11"
162S125-30	33	12	11' 8"	9' 3"	8' 1"	10' 2"	8' 1"	7' 1"	8' 11"	7' 4"	6' 5"
162S125-30	33	16	10' 7"	8' 5"	7' 4"	8' 11"	7' 4"	6' 5"	7' 9"	6' 8"	5' 10"
162S125-30	33	24	8' 11"	7' 4"	6' 5"	7' 3"	6' 5"	5' 7"	6' 4"	5' 10"	5' 1"
162S125-33	33	12	12' 0"	9' 6"	8' 4"	10' 6"	8' 4"	7' 3"	9' 6"	7' 7"	6' 7"
162S125-33	33	16	10' 11"	8' 8"	7' 7"	9' 6"	7' 7"	6' 7"	8' 3"	6' 11"	6' 0"
162S125-33	33	24	9' 6"	7' 7"	6' 7"	7' 10"	6' 7"	5' 9"	6' 9"	6' 0"	5' 3"
250S125-18	33	12	11' 8"	10' 6"	9' 2"	9' 7"	9' 2"	8' 1"	8' 3"	8' 3"	7' 4"
250S125-18	33	16	10' 2"	9' 7"	8' 4"	8' 3"	8' 3"	7' 4"	7' 2"	7' 2"	6' 8"
250S125-18	33	24	8' 3"	8' 3"	7' 4"	6' 9"	6' 9"	6' 5"	5' 10" e	5' 10" e	5' 10" e
250S125-27	33	12	15' 7"	12' 4"	10' 10"	12' 9"	10' 10"	9' 5"	11' 0"	9' 10"	8' 7"
250S125-27	33	16	13' 6"	11' 3"	9' 10"	11' 0"	9' 10"	8' 7"	9' 7"	8' 11"	7' 10"
250S125-27	33	24	11' 0"	9' 10"	8' 7"	9' 0"	8' 7"	7' 6"	7' 10"	7' 10"	6' 10"
250S125-30	33	12	16' 1"	12' 9"	11' 2"	13' 7"	11' 2"	9' 9"	11' 10"	10' 2"	8' 10"
250S125-30	33	16	14' 5"	11' 7"	10' 2"	11' 10"	10' 2"	8' 10"	10' 3"	9' 2"	8' 1"
250S125-30	33	24	11' 10"	10' 2"	8' 10"	9' 8"	8' 10"	7' 9"	8' 4"	8' 1"	7' 0"
250S125-33	33	12	16' 7"	13' 2"	11' 6"	14' 6"	11' 6"	10' 1"	12' 8"	10' 6"	9' 2"
250S125-33	33	16	15' 1"	12' 0"	10' 6"	12' 8"	10' 6"	9' 2"	11' 0"	9' 6"	8' 4"
250S125-33	33	24	12' 8"	10' 6"	9' 2"	10' 4"	9' 2"	8' 0"	8' 11"	8' 4"	7' 3"
250S125-43	33	12	18' 1"	14' 4"	12' 6"	15' 10"	12' 6"	10' 11"	14' 4"	11' 5"	9' 11"
250S125-43	33	16	16' 5"	13' 0"	11' 5"	14' 4"	11' 5"	9' 11"	13' 0"	10' 4"	9' 0"
250S125-43	33	24	14' 4"	11' 5"	9' 11"	12' 4"	9' 11"	8' 8"	10' 8"	9' 0"	7' 11"
350S125-18	33	12	13' 9"	13' 9"	12' 1"	11' 3"	11' 3"	10' 7"	9' 9"	9' 9"	9' 7"
350S125-18	33	16	11' 11"	11' 11"	11' 0"	9' 9"	9' 9"	9' 7"	8' 5" e	8' 5" e	8' 5" e
350S125-18	33	24	9' 9"	9' 9"	9' 7"	7' 11" e	7' 11" e	7' 11" e	6' 11" e	6' 11" e	6' 11" e
350S125-27	33	12	18' 6"	16' 1"	14' 0"	15' 1"	14' 0"	12' 3"	13' 1"	12' 9"	11' 1"
350S125-27	33	16	16' 0"	14' 7"	12' 9"	13' 1"	12' 9"	11' 1"	11' 4"	11' 4"	10' 1"
350S125-27	33	24	13' 1"	12' 9"	11' 1"	10' 8"	10' 8"	9' 9"	9' 3"	9' 3"	8' 10"
350S125-30	33	12	19' 11"	16' 7"	14' 6"	16' 3"	14' 6"	12' 8"	14' 1"	13' 2"	11' 6"
350S125-30	33	16	17' 3"	15' 0"	13' 2"	14' 1"	13' 2"	11' 6"	12' 2"	11' 11"	10' 5"
350S125-30	33	24	14' 1"	13' 2"	11' 6"	11' 6"	11' 6"	10' 0"	9' 11"	9' 11"	9' 1"
350S125-33	33	12	21' 5"	17' 1"	14' 11"	17' 6"	14' 11"	13' 1"	15' 2"	13' 7"	11' 10"
350S125-33	33	16	18' 7"	15' 7"	13' 7"	15' 2"	13' 7"	11' 10"	13' 2"	12' 4"	10' 9"
350S125-33	33	24	15' 2"	13' 7"	11' 10"	12' 5"	11' 10"	10' 4"	10' 9"	10' 9"	9' 5"
350S125-43	33	12	23' 6"	18' 8"	16' 3"	20' 6"	16' 3"	14' 3"	18' 5"	14' 10"	12' 11"
350S125-43	33	16	21' 4"	16' 11"	14' 10"	18' 5"	14' 10"	12' 11"	16' 0"	13' 5"	11' 9"
350S125-43	33	24	18' 5"	14' 10"	12' 11"	15' 1"	12' 11"	11' 4"	13' 0"	11' 9"	10' 3"
350S125-54	50	12	25' 1"	19' 11"	17' 5"	21' 11"	17' 5"	15' 2"	19' 11"	15' 10"	13' 10"
350S125-54	50	16	22' 10"	18' 1"	15' 10"	19' 11"	15' 10"	13' 10"	18' 1"	14' 4"	12' 7"
350S125-54	50	24	19' 11"	15' 10"	13' 10"	17' 5"	13' 10"	12' 1"	15' 10"	12' 7"	11' 0"
350S125-68	50	12	26' 10"	21' 4"	18' 7"	23' 5"	18' 7"	16' 3"	21' 4"	16' 11"	14' 9"
350S125-68	50	16	24' 5"	19' 4"	16' 11"	21' 4"	16' 11"	14' 9"	19' 4"	15' 4"	13' 5"
350S125-68	50	24	21' 4"	16' 11"	14' 9"	18' 7"	14' 9"	12' 11"	16' 11"	13' 5"	11' 9"
362S125-18	33	12	14' 0"	14' 0"	12' 6"	11' 6"	11' 6"	10' 11"	9' 11" e	9' 11" e	9' 11" e
362S125-18	33	16	12' 2"	12' 2"	11' 4"	9' 11" e	9' 11" e	9' 11" e	8' 7" e	8' 7" e	8' 7" e
362S125-18	33	24	9' 11" e	9' 11" e	9' 11" e	8' 1" e	8' 1" e	8' 1" e	7' 0" e	7' 0" e	7' 0" e
362S125-27	33	12	18' 10"	16' 6"	14' 5"	15' 5"	14' 5"	12' 7"	13' 4"	13' 1"	11' 5"
362S125-27	33	16	16' 4"	15' 0"	13' 1"	13' 4"	13' 1"	11' 5"	11' 7"	11' 7"	10' 5"
362S125-27	33	24	13' 4"	13' 1"	11' 5"	10' 11"	10' 11"	10' 0"	9' 5"	9' 5"	9' 1"
362S125-30	33	12	20' 3"	17' 0"	14' 10"	16' 7"	14' 10"	13' 0"	14' 4"	13' 6"	11' 10"
362S125-30	33	16	17' 7"	15' 6"	13' 6"	14' 4"	13' 6"	11' 10"	12' 5"	12' 3"	10' 9"
362S125-30	33	24	14' 4"	13' 6"	11' 10"	11' 8"	11' 8"	10' 4"	10' 2"	10' 2"	9' 4"

[1] Web-height to thickness ratio exceeds 200. Web Stiffeners are required at all support points and concentrated loads.
"e" web stiffeners required at ends

Limiting Wall Heights

Interior Non-Structural Non-Composite

See Interior Non-Structural Non-Composite Table Notes on page 15.

Complies with 2009 & 2012 International Building Code (IBC)

Section	F_y	Spacing	5 psf			7.5 psf			10 psf		
	(ksi)	(in) oc	L/120	L/240	L/360	L/120	L/240	L/360	L/120	L/240	L/360
362S125-33	33	12	21' 11"	17' 7"	15' 4"	17' 10"	15' 4"	13' 5"	15' 6"	14' 0"	12' 2"
362S125-33	33	16	18' 11"	16' 0"	14' 0"	15' 6"	14' 0"	12' 2"	13' 5"	12' 8"	11' 1"
362S125-33	33	24	15' 6"	14' 0"	12' 2"	12' 8"	12' 2"	10' 8"	10' 11"	10' 11"	9' 8"
362S125-43	33	12	24' 2"	19' 2"	16' 9"	21' 1"	16' 9"	14' 8"	18' 10"	15' 3"	13' 4"
362S125-43	33	16	21' 11"	17' 5"	15' 3"	18' 10"	15' 3"	13' 4"	16' 4"	13' 10"	12' 1"
362S125-43	33	24	18' 10"	15' 3"	13' 4"	15' 4"	13' 4"	11' 7"	13' 4"	12' 1"	10' 7"
362S125-54	50	12	25' 10"	20' 6"	17' 11"	22' 7"	17' 11"	15' 8"	20' 6"	16' 3"	14' 2"
362S125-54	50	16	23' 5"	18' 7"	16' 3"	20' 6"	16' 3"	14' 2"	18' 7"	14' 9"	12' 11"
362S125-54	50	24	20' 6"	16' 3"	14' 2"	17' 11"	14' 2"	12' 5"	16' 3"	12' 11"	11' 3"
362S125-68	50	12	27' 7"	21' 11"	19' 2"	24' 1"	19' 2"	16' 9"	21' 11"	17' 5"	15' 2"
362S125-68	50	16	25' 1"	19' 11"	17' 5"	21' 11"	17' 5"	15' 2"	19' 11"	15' 10"	13' 10"
362S125-68	50	24	21' 11"	17' 5"	15' 2"	19' 2"	15' 2"	13' 3"	17' 5"	13' 10"	12' 1"
400S125-18	33	12	14' 9" e	14' 9" e	13' 6" e	12' 1" e	12' 1" e	11' 9" e	10' 5" e	10' 5" e	10' 5" e
400S125-18	33	16	12' 10" e	12' 10" e	12' 3" e	10' 5" e	10' 5" e	10' 5" e	9' 1" e	9' 1" e	9' 1" e
400S125-18	33	24	10' 5" e	10' 5" e	10' 5" e	8' 6" e	8' 6" e	8' 6" e	7' 5" e	7' 5" e	7' 5" e
400S125-27	33	12	19' 11"	17' 10"	15' 7"	16' 3"	15' 7"	13' 7"	14' 1"	14' 1"	12' 4"
400S125-27	33	16	17' 3"	16' 2"	14' 2"	14' 1"	14' 1"	12' 4"	12' 2"	12' 2"	11' 3"
400S125-27	33	24	14' 1"	14' 1"	12' 4"	11' 6"	11' 6"	10' 9"	9' 11"	9' 11"	9' 10"
400S125-30	33	12	21' 5"	18' 5"	16' 1"	17' 6"	16' 1"	14' 0"	15' 2"	14' 7"	12' 9"
400S125-30	33	16	18' 6"	16' 8"	14' 7"	15' 2"	14' 7"	12' 9"	13' 1"	13' 1"	11' 7"
400S125-30	33	24	15' 2"	14' 7"	12' 9"	12' 4"	12' 4"	11' 2"	10' 8"	10' 8"	10' 1"
400S125-33	33	12	23' 2"	19' 0"	16' 7"	18' 11"	16' 7"	14' 6"	16' 4"	15' 1"	13' 2"
400S125-33	33	16	20' 0"	17' 3"	15' 1"	16' 4"	15' 1"	13' 2"	14' 2"	13' 9"	12' 0"
400S125-33	33	24	16' 4"	15' 1"	13' 2"	13' 4"	13' 2"	11' 6"	11' 7"	11' 7"	10' 6"
400S125-43	33	12	26' 1"	20' 9"	18' 1"	22' 10"	18' 1"	15' 10"	19' 11"	16' 5"	14' 4"
400S125-43	33	16	23' 9"	18' 10"	16' 5"	19' 11"	16' 5"	14' 4"	17' 3"	14' 11"	13' 1"
400S125-43	33	24	19' 11"	16' 5"	14' 4"	16' 3"	14' 4"	12' 7"	14' 1"	13' 1"	11' 5"
400S125-54	50	12	27' 11"	22' 2"	19' 4"	24' 5"	19' 4"	16' 11"	22' 2"	17' 7"	15' 4"
400S125-54	50	16	25' 4"	20' 2"	17' 7"	22' 2"	17' 7"	15' 4"	20' 2"	16' 0"	13' 11"
400S125-54	50	24	22' 2"	17' 7"	15' 4"	19' 4"	15' 4"	13' 5"	17' 7"	13' 11"	12' 2"
400S125-68	50	12	29' 10"	23' 8"	20' 8"	26' 1"	20' 8"	18' 1"	23' 8"	18' 10"	16' 5"
400S125-68	50	16	27' 2"	21' 6"	18' 10"	23' 8"	18' 10"	16' 5"	21' 6"	17' 1"	14' 11"
400S125-68	50	24	23' 8"	18' 10"	16' 5"	20' 8"	16' 5"	14' 4"	18' 10"	14' 11"	13' 0"
600S125-27	33	12	24' 10" e	24' 4" e	21' 3" e	20' 4" e	20' 4" e	18' 7" e	17' 7" e	17' 7" e	16' 10" e
600S125-27	33	16	21' 6" e	21' 6" e	19' 4" e	17' 7" e	17' 7" e	16' 10" e	15' 3" e	15' 3" e	15' 3" e
600S125-27	33	24	17' 7" e	17' 7" e	16' 10" e	14' 4" e	14' 4" e	14' 4" e	12' 5" e	12' 5" e	12' 5" e
600S125-30	33	12	26' 10"	25' 2"	22' 0"	21' 11"	21' 11"	19' 3"	18' 11"	18' 11"	17' 6"
600S125-30	33	16	23' 3"	22' 11"	20' 0"	18' 11"	18' 11"	17' 6"	16' 5"	16' 5"	15' 10"
600S125-30	33	24	18' 11"	18' 11"	17' 6"	15' 6"	15' 6"	15' 3"	13' 5" e	13' 5" e	13' 5" e
600S125-33	33	12	29' 0"	26' 2"	22' 10"	23' 8"	22' 10"	19' 11"	20' 6"	20' 6"	18' 1"
600S125-33	33	16	25' 2"	23' 9"	20' 9"	20' 6"	20' 6"	18' 1"	17' 9"	17' 9"	16' 6"
600S125-33	33	24	20' 6"	20' 6"	18' 1"	16' 9"	16' 9"	15' 10"	14' 6"	14' 6"	14' 5"
600S125-43	33	12	35' 6"	28' 9"	25' 1"	29' 0"	25' 1"	21' 11"	25' 1"	22' 10"	19' 11"
600S125-43	33	16	30' 9"	26' 1"	22' 10"	25' 1"	22' 10"	19' 11"	21' 9"	20' 9"	18' 1"
600S125-43	33	24	25' 1"	22' 10"	19' 11"	20' 6"	19' 11"	17' 5"	17' 9"	17' 9"	15' 10"
600S125-54	50	12	38' 9"	30' 9"	26' 10"	33' 10"	26' 10"	23' 6"	30' 9"	24' 5"	21' 4"
600S125-54	50	16	35' 3"	27' 11"	24' 5"	30' 9"	24' 5"	21' 4"	27' 11"	22' 2"	19' 5"
600S125-54	50	24	30' 9"	24' 5"	21' 4"	26' 10"	21' 4"	18' 8"	24' 1"	19' 5"	16' 11"
600S125-68	50	12	41' 7"	33' 0"	28' 10"	36' 4"	28' 10"	25' 2"	33' 0"	26' 2"	22' 10"
600S125-68	50	16	37' 9"	30' 0"	26' 2"	33' 0"	26' 2"	22' 10"	30' 0"	23' 9"	20' 9"
600S125-68	50	24	33' 0"	26' 2"	22' 10"	28' 10"	22' 10"	20' 0"	26' 2"	20' 9"	18' 2"
800S125-43	33	12	40' 11"	36' 1"	31' 6"	33' 5"	31' 6"	27' 6"	28' 11"	28' 8"	25' 0"
800S125-43	33	16	35' 5"	32' 9"	28' 8"	28' 11"	28' 8"	25' 0"	25' 1"	25' 1"	22' 9"
800S125-43	33	24	28' 11"	28' 8"	25' 0"	23' 8"	23' 8"	21' 10"	20' 6"	20' 6"	19' 10"
800S125-54	50	12	48' 10"	38' 9"	33' 10"	42' 8"	33' 10"	29' 7"	38' 9"	30' 9"	26' 10"
800S125-54	50	16	44' 4"	35' 2"	30' 9"	38' 9"	30' 9"	26' 10"	34' 1"	27' 11"	24' 5"
800S125-54	50	24	38' 9"	30' 9"	26' 10"	32' 1"	26' 10"	23' 6"	27' 10"	24' 5"	21' 4"
800S125-68	50	12	52' 10"	41' 11"	36' 8"	46' 2"	36' 8"	32' 0"	41' 11"	33' 4"	29' 1"
800S125-68	50	16	48' 0"	38' 1"	33' 4"	41' 11"	33' 4"	29' 1"	38' 1"	30' 3"	26' 5"
800S125-68	50	24	41' 11"	33' 4"	29' 1"	36' 8"	29' 1"	25' 5"	33' 3"	26' 5"	23' 1"

[1] Web-height to thickness ratio exceeds 200. Web Stiffeners are required at all support points and concentrated loads.
"e" web stiffeners required at ends

Wall Height Table Notes

1. Listed span for "Double Span" tables is the distance from either end to the center of interior support, with the stud continuous past the interior support.
2. Listed wind pressures represent 1.0 W calculated based on 2009 IBC or 0.6 W calculated based on 2012 IBC. For deflection calculations, listed wind pressures, have been reduced by 0.70 as allowed by IBC. The 5 psf pressure has not been reduced for deflection checks.
3. Studs must be braced against rotation and lateral movement at all supports. See typical bracing details in this catalog.
4. Studs are assumed to be adequately braced at a maximum spacing of L_u to develop full allowable moment.
5. Web crippling check is based on 1" of bearing at end supports and 3" of bearing at interior support.
6. Shear and web crippling capacity at end supports have NOT been reduced for punchouts. Shear and web crippling capacity at interior support have been reduced for the presence of punchout adjacent to the support.
7. Combined bending and shear check at interior support is based on unreinforced web per AISI S100 (Eq. C3.3.1-1). Shear capacity and combined bending and shear check at interior support have been reduced for the presence of punchouts adjacent to support.
8. See page 2 for additional notes.

Section	F_y	Spacing	5 psf			15 psf			20 psf			25 psf			30 psf			35 psf			40 psf			50 psf		
	(ksi)	(in) oc	L/120	L/240	L/360	L/240	L/360	L/600	L/240	L/360	L/600	L/240	L/360	L/600	L/240	L/360	L/600	L/240	L/360	L/600	L/240	L/360	L/600	L/240	L/360	L/600
350S162-33	33	12	23' 9"	18' 10"	16' 5"	14' 8"	12' 10"	10' 10"	13' 0"	11' 8"	9' 10"	11' 8"	10' 10"	9' 2"	10' 8"	10' 2"	8' 7"	9' 10" e	9' 8" e	8' 2"	9' 2" e	9' 2" e	7' 10"	8' 3" e	8' 3" e	7' 3" e
350S162-33	33	16	21' 7"	17' 1"	14' 11"	13' 0"	11' 8"	9' 10"	11' 3"	10' 7"	8' 11"	10' 1" e	9' 10"	8' 4"	9' 2" e	9' 2" e	7' 10"	8' 6" e	8' 6" e	7' 5" e	8' 0" e	8' 0" e	7' 1" e	7' 2" e	7' 2" e	6' 7" e
350S162-33	33	24	18' 5"	14' 11"	13' 1"	10' 8"	10' 2"	8' 7"	9' 2" e	9' 2" e	7' 10"	8' 3" e	8' 3" e	7' 3" e	7' 6" e	7' 6" e	6' 10" e	7' 0" e	7' 0" e	6' 6" e	6' 6" e	6' 6" e	6' 2" e	5' 10" e	5' 10" e	5' 9" e
350S162-43	33	12	25' 10"	20' 6"	17' 11"	16' 0"	14' 0"	11' 9"	14' 6"	12' 8"	10' 8"	13' 6"	11' 9"	9' 11"	12' 6"	11' 1"	9' 4"	11' 7"	10' 6"	8' 11"	10' 10"	10' 1"	8' 6"	9' 8"	9' 4"	7' 11"
350S162-43	33	16	23' 5"	18' 7"	16' 3"	14' 6"	12' 8"	10' 8"	13' 2"	11' 6"	9' 9"	11' 10"	10' 8"	9' 0"	10' 10"	10' 1"	8' 6"	10' 0"	9' 7"	8' 1"	9' 5"	9' 2"	7' 9"	8' 5" e	8' 5" e	7' 2"
350S162-43	33	24	20' 6"	16' 3"	14' 2"	12' 6"	11' 1"	9' 4"	10' 10"	10' 1"	8' 6"	9' 8"	9' 4"	7' 11"	8' 10"	8' 10"	7' 5"	8' 2" e	8' 2" e	7' 1"	7' 8" e	7' 8" e	6' 9"	6' 10" e	6' 10" e	6' 3" e
350S162-54	50	12	27' 8"	21' 11"	19' 2"	17' 1"	15' 0"	12' 7"	15' 7"	13' 7"	11' 6"	14' 5"	12' 7"	10' 8"	13' 7"	11' 10"	10' 0"	12' 11"	11' 3"	9' 6"	12' 4"	10' 9"	9' 1"	11' 6"	10' 0"	8' 5"
350S162-54	50	16	25' 1"	19' 11"	17' 5"	15' 7"	13' 7"	11' 6"	14' 2"	12' 4"	10' 5"	13' 1"	11' 6"	9' 8"	12' 4"	10' 9"	9' 1"	11' 9"	10' 3"	8' 8"	11' 3"	9' 10"	8' 3"	10' 5"	9' 1"	7' 8"
350S162-54	50	24	21' 11"	17' 5"	15' 2"	13' 7"	11' 10"	10' 0"	12' 4"	10' 9"	9' 1"	11' 6"	10' 0"	8' 5"	10' 9"	9' 5"	7' 11"	10' 3"	8' 11"	7' 7"	9' 10"	8' 7"	7' 3"	9' 1"	7' 11"	6' 8"
350S162-68	50	12	29' 7"	23' 5"	20' 6"	18' 4"	16' 0"	13' 6"	16' 8"	14' 6"	12' 3"	15' 5"	13' 6"	11' 5"	14' 6"	12' 8"	10' 9"	13' 10"	12' 1"	10' 2"	13' 3"	11' 6"	9' 9"	12' 3"	10' 9"	9' 0"
350S162-68	50	16	26' 10"	21' 4"	18' 7"	16' 8"	14' 6"	12' 3"	15' 1"	13' 3"	11' 2"	14' 0"	12' 3"	10' 4"	13' 3"	11' 6"	9' 9"	12' 7"	11' 0"	9' 3"	12' 0"	10' 6"	8' 10"	11' 2"	9' 9"	8' 3"
350S162-68	50	24	23' 5"	18' 7"	16' 3"	14' 6"	12' 8"	10' 9"	13' 3"	11' 6"	9' 9"	12' 3"	10' 9"	9' 0"	11' 6"	10' 1"	8' 6"	11' 0"	9' 7"	8' 1"	10' 6"	9' 2"	7' 9"	9' 9"	8' 6"	7' 2"
362S137-33	33	12	23' 3"	18' 5"	16' 1"	14' 3"	12' 7"	10' 7"	12' 4"	11' 5"	9' 8"	11' 1"	10' 7"	8' 11"	10' 1"	10' 0"	8' 5"	9' 4"	9' 4"	8' 0"	8' 9" e	8' 9" e	7' 8"	7' 10" e	7' 10" e	7' 1" e
362S137-33	33	16	21' 1"	16' 9"	14' 8"	12' 4"	11' 5"	9' 8"	10' 9"	10' 5"	8' 9"	9' 7"	9' 7"	8' 2"	8' 9" e	8' 9" e	7' 8"	8' 1" e	8' 1" e	7' 3" e	7' 7" e	7' 7" e	6' 11" e	6' 9" e	6' 9" e	6' 5" e
362S137-33	33	24	17' 6"	14' 8"	12' 10"	10' 1"	10' 0"	8' 5"	8' 9" e	8' 9" e	7' 8"	7' 10" e	7' 10" e	7' 1" e	7' 2" e	7' 2" e	6' 8" e	6' 7" e	6' 7" e	6' 4" e	6' 2" e	6' 2" e	6' 1" e	5' 6" e	5' 6" e	5' 6" e
362S162-33	33	12	24' 4"	19' 4"	16' 11"	15' 1"	13' 2"	11' 1"	13' 3"	12' 0"	10' 1"	11' 11"	11' 1"	9' 5"	10' 10"	10' 6"	8' 10"	10' 0" e	9' 11" e	8' 5"	9' 5" e	9' 5" e	8' 0"	8' 5" e	8' 5" e	7' 5" e
362S162-33	33	16	22' 2"	17' 7"	15' 4"	13' 3"	12' 0"	10' 1"	11' 6"	10' 11"	9' 2"	10' 3" e	10' 1" e	8' 6"	9' 5" e	9' 5" e	8' 0"	8' 8" e	8' 8" e	7' 7" e	8' 2" e	8' 2" e	7' 3" e	7' 3" e	7' 3" e	6' 9" e
362S162-33	33	24	18' 9"	15' 4"	13' 5"	10' 10"	10' 6"	8' 10"	9' 5" e	9' 5" e	8' 0"	8' 5" e	8' 5" e	7' 5" e	7' 8" e	7' 8" e	7' 0" e	7' 1" e	7' 1" e	6' 8" e	6' 8" e	6' 8" e	6' 4" e	5' 11" e	5' 11" e	5' 11" e
362S200-33	33	12	25' 9"	20' 5"	17' 10"	15' 11"	13' 11"	11' 9"	13' 11"	12' 8"	10' 8"	12' 5"	11' 9"	9' 11"	11' 4" e	11' 1" e	9' 4"	10' 6" e	10' 6" e	8' 10"	9' 10" e	9' 10" e	8' 6" e	8' 10" e	8' 10" e	7' 10" e
362S200-33	33	16	23' 4"	18' 7"	16' 2"	13' 11"	12' 8"	10' 8"	12' 1"	11' 6"	9' 8"	10' 9" e	10' 8" e	9' 0"	9' 10" e	9' 10" e	8' 6" e	9' 1" e	9' 1" e	8' 1" e	8' 6" e	8' 6" e	7' 8" e	7' 7" e	7' 7" e	7' 2" e
362S200-33	33	24	19' 8"	16' 2"	14' 2"	11' 4" e	11' 1" e	9' 4"	9' 10" e	9' 10" e	8' 6" e	8' 10" e	8' 10" e	7' 10" e	8' 0" e	8' 0" e	7' 5" e	7' 5" e	7' 5" e	7' 0" e	7' 0" e	7' 0" e	6' 9" e	6' 3" e	6' 3" e	6' 3" e
362S137-43	33	12	25' 3"	20' 1"	17' 6"	15' 8"	13' 8"	11' 7"	14' 3"	12' 5"	10' 6"	13' 0"	11' 7"	9' 9"	11' 10"	10' 10"	9' 2"	11' 0"	10' 4"	8' 8"	10' 3"	9' 10"	8' 4"	9' 2"	9' 2"	7' 9"
362S137-43	33	16	23' 0"	18' 3"	15' 11"	14' 3"	12' 5"	10' 6"	12' 7"	11' 4"	9' 6"	11' 3"	10' 6"	8' 10"	10' 3"	9' 10"	8' 4"	9' 6"	9' 5"	7' 11"	8' 11"	8' 11"	7' 7"	7' 11"	7' 11"	7' 0"
362S137-43	33	24	20' 1"	15' 11"	13' 11"	11' 10"	10' 10"	9' 2"	10' 3"	9' 10"	8' 4"	9' 2"	9' 2"	7' 9"	8' 5"	8' 5"	7' 3"	7' 9"	7' 9"	6' 11"	7' 3" e	7' 3" e	6' 7"	6' 6" e	6' 6" e	6' 2" e
362S162-43	33	12	26' 6"	21' 0"	18' 4"	16' 5"	14' 4"	12' 1"	14' 11"	13' 0"	11' 0"	13' 10"	12' 1"	10' 2"	12' 9"	11' 5"	9' 7"	11' 10"	10' 10"	9' 1"	11' 1"	10' 4"	8' 9"	9' 11"	9' 7"	8' 1"
362S162-43	33	16	24' 1"	19' 1"	16' 8"	14' 11"	13' 0"	11' 0"	13' 7"	11' 10"	10' 0"	12' 1"	11' 0"	9' 3"	11' 1"	10' 4"	8' 9"	10' 3"	9' 10"	8' 3"	9' 7"	9' 5"	7' 11"	8' 7" e	8' 7" e	7' 4"
362S162-43	33	24	21' 0"	16' 8"	14' 7"	12' 9"	11' 5"	9' 7"	11' 1"	10' 4"	8' 9"	9' 11"	9' 7"	8' 1"	9' 0"	9' 0"	7' 7"	8' 4" e	8' 4" e	7' 3"	7' 10" e	7' 10" e	6' 11" e	7' 0" e	7' 0" e	6' 5" e
362S200-43	33	12	28' 0"	22' 3"	19' 5"	17' 4"	15' 2"	12' 9"	15' 9"	13' 9"	11' 7"	14' 8"	12' 9"	10' 9"	13' 8"	12' 0"	10' 2"	12' 8"	11' 5"	9' 8"	11' 10"	10' 11"	9' 3"	10' 7"	10' 2"	8' 7"
362S200-43	33	16	25' 5"	20' 2"	17' 8"	15' 9"	13' 9"	11' 7"	14' 4"	12' 6"	10' 7"	13' 0"	11' 7"	9' 10"	11' 10"	10' 11"	9' 3"	11' 0"	10' 5"	8' 9"	10' 3"	9' 11"	8' 4"	9' 2" e	9' 2" e	7' 9"
362S200-43	33	24	22' 3"	17' 8"	15' 5"	13' 8"	12' 0"	10' 2"	11' 10"	10' 11"	9' 3"	10' 7"	10' 2"	8' 7"	9' 8" e	9' 7" e	8' 1"	9' 0" e	9' 0" e	7' 8"	8' 5" e	8' 5" e	7' 4" e	7' 6" e	7' 6" e	6' 9" e
362S137-54	50	12	27' 1"	21' 6"	18' 9"	16' 9"	14' 8"	12' 4"	15' 3"	13' 4"	11' 3"	14' 2"	12' 4"	10' 5"	13' 4"	11' 8"	9' 10"	12' 8"	11' 1"	9' 4"	12' 1"	10' 7"	8' 11"	11' 3"	9' 10"	8' 3"
362S137-54	50	16	24' 7"	19' 6"	17' 1"	15' 3"	13' 4"	11' 3"	13' 10"	12' 1"	10' 2"	12' 10"	11' 3"	9' 6"	12' 1"	10' 7"	8' 11"	11' 6"	10' 0"	8' 6"	11' 0"	9' 7"	8' 1"	10' 2"	8' 11"	7' 6"
362S137-54	50	24	21' 6"	17' 1"	14' 11"	13' 4"	11' 8"	9' 10"	12' 1"	10' 7"	8' 11"	11' 3"	9' 10"	8' 3"	10' 7"	9' 3"	7' 9"	10' 0"	8' 9"	7' 5"	9' 7"	8' 5"	7' 1"	8' 9"	7' 9"	6' 7"
362S162-54	50	12	28' 5"	22' 6"	19' 8"	17' 7"	15' 4"	13' 0"	16' 0"	14' 0"	11' 9"	14' 10"	13' 0"	10' 11"	14' 0"	12' 2"	10' 3"	13' 3"	11' 7"	9' 9"	12' 8"	11' 1"	9' 4"	11' 9"	10' 3"	8' 8"
362S162-54	50	16	25' 10"	20' 6"	17' 11"	16' 0"	14' 0"	11' 9"	14' 6"	12' 8"	10' 8"	13' 6"	11' 9"	9' 11"	12' 8"	11' 1"	9' 4"	12' 1"	10' 6"	8' 11"	11' 6"	10' 1"	8' 6"	10' 8"	9' 4"	7' 11"
362S162-54	50	24	22' 6"	17' 11"	15' 7"	14' 0"	12' 2"	10' 3"	12' 8"	11' 1"	9' 4"	11' 9"	10' 3"	8' 8"	11' 1"	9' 8"	8' 2"	10' 6"	9' 2"	7' 9"	10' 1"	8' 10"	7' 5"	9' 4"	8' 2"	6' 11"
362S200-54	50	12	30' 0"	23' 10"	20' 10"	18' 7"	16' 3"	13' 8"	16' 11"	14' 9"	12' 5"	15' 8"	13' 8"	11' 7"	14' 9"	12' 11"	10' 10"	14' 0"	12' 3"	10' 4"	13' 5"	11' 9"	9' 11"	12' 5"	10' 10"	9' 2"
362S200-54	50	16	27' 3"	21' 8"	18' 11"	16' 11"	14' 9"	12' 5"	15' 4"	13' 5"	11' 4"	14' 3"	12' 5"	10' 6"	13' 5"	11' 9"	9' 11"	12' 9"	11' 2"	9' 5"	12' 2"	10' 8"	9' 0"	11' 4"	9' 11"	8' 4"
362S200-54	50	24	23' 10"	18' 11"	16' 6"	14' 9"	12' 11"	10' 10"	13' 5"	11' 9"	9' 11"	12' 5"	10' 10"	9' 2"	11' 9"	10' 3"	8' 8"	11' 2"	9' 9"	8' 2"	10' 8"	9' 4"	7' 10"	9' 11"	8' 8"	7' 3"
362S137-68	50	12	28' 11"	22' 11"	20' 1"	17' 11"	15' 8"	13' 2"	16' 3"	14' 3"	12' 0"	15' 1"	13' 2"	11' 2"	14' 3"	12' 5"	10' 6"	13' 6"	11' 10"	9' 11"	12' 11"	11' 4"	9' 6"	12' 0"	10' 6"	8' 10"
362S137-68	50	16	26' 3"	20' 10"	18' 3"	16' 3"	14' 3"	12' 0"	14' 10"	12' 11"	10' 11"	13' 9"	12' 0"	10' 1"	12' 11"	11' 4"	9' 6"	12' 3"	10' 9"	9' 1"	11' 9"	10' 3"	8' 8"	10' 11"	9' 6"	8' 0"
362S137-68	50	24	22' 11"	18' 3"	15' 11"	14' 3"	12' 5"	10' 6"	12' 11"	11' 4"	9' 6"	12' 0"	10' 6"	8' 10"	11' 4"	9' 10"	8' 4"	10' 9"	9' 4"	7' 11"	10' 3"	9' 0"	7' 7"	9' 6"	8' 4"	7' 0"
362S162-68	50	12	30' 4"	24' 1"	21' 1"	18' 10"	16' 5"	13' 10"	17' 1"	14' 11"	12' 7"	15' 11"	13' 10"	11' 8"	14' 11"	13' 1"	11' 0"	14' 2"	12' 5"	10' 5"	13' 7"	11' 10"	10' 0"	12' 7"	11' 0"	9' 3"
362S162-68	50	16	27' 7"	21' 11"	19' 2"	17' 1"	14' 11"	12' 7"	15' 6"	13' 7"	11' 5"	14' 5"	12' 7"	10' 8"	13' 7"	11' 10"	10' 0"	12' 11"	11' 3"	9' 6"	12' 4"	10' 9"	9' 1"	11' 5"	10' 0"	8' 5"
362S162-68	50	24	24' 1"	19' 2"	16' 9"	14' 11"	13' 1"	11' 0"	13' 7"	11' 10"	10' 0"	12' 7"	11' 0"	9' 3"	11' 10"	10' 4"	8' 9"	11' 3"	9' 10"	8' 4"	10' 9"	9' 5"	7' 11"	10' 0"	8' 9"	7' 4"
362S200-68	50	12	32' 2"	25' 6"	22' 3"	19' 11"	17' 5"	14' 8"	18' 1"	15' 10"	13' 4"	16' 10"	14' 8"	12' 5"	15' 10"	13' 10"	11' 8"	15' 0"	13' 1"	11' 1"	14' 4"	12' 7"	10' 7"	13' 4"	11' 8"	9' 10"
362S200-68	50	16	29' 2"	23' 2"	20' 3"	18' 1"	15' 10"	13' 4"	16' 5"	14' 4"	12' 1"	15' 3"	13' 4"	11' 3"	14' 4"	12' 7"	10' 7"	13' 8"	11' 11"	10' 1"	13' 1"	11' 5"	9' 7"	12' 1"	10' 7"	8' 11"
362S200-68	50	24	25' 6"	20' 3"	17' 8"	15' 10"	13' 10"	11' 8"	14' 4"	12' 7"	10' 7"	13' 4"	11' 8"	9' 10"	12' 7"	11' 0"	9' 3"	11' 11"	10' 5"	8' 9"	11' 5"	9' 11"	8' 5"	10' 7"	9' 3"	7' 10"
400S137-33	33	12	25' 1"	19' 11"	17' 5"	15' 1"	13' 7"	11' 6"	13' 1"	12' 4"	10' 5"	11' 8"	11' 6"	9' 8"	10' 8"	10' 8"	9' 1"	9' 10" e	9' 10" e	8' 8"	9' 3" e	9' 3" e	8' 3" e	8' 3" e	8' 3" e	7' 8" e
400S137-33	33	16	22' 7"	18' 1"	15' 10"	13' 1"	12' 4"	10' 5"	11' 4"	11' 3"	9' 6"	10' 1" e	10' 1" e	8' 9"	9' 3" e	9' 3" e	8' 3" e	8' 7" e	8' 7" e	7' 10" e	8' 0" e	8' 0" e	7' 6" e	7' 2" e	7' 2" e	7' 0" e
400S137-33	33	24	18' 6"	15' 10"	13' 10"	10' 8"	10' 8"	9' 1"	9' 3" e	9' 3" e	8' 3" e	8' 3" e	8' 3" e	7' 8" e	7' 6" e	7' 6" e	7' 3" e	7' 0" e	7' 0" e	6' 10" e	6' 6" e	6' 6" e	6' 6" e	5' 10" e	5' 10" e	5' 10" e
400S162-33	33	12	26' 3"	20' 10"	18' 3"	16' 2"	14' 3"	12' 0"	14' 0"	12' 11"	10' 11"	12' 7"	12' 0"	10' 1"	11' 5" e	11' 4" e	9' 6"	10' 7" e	10' 7" e	9' 1"	9' 11" e	9' 11" e	8' 8" e	8' 10" e	8' 10" e	8' 0" e
400S162-33	33	16	23' 11"	18' 11"	16' 7"	14' 0"	12' 11"	10' 11"	12' 2"	11' 9"	9' 11"	10' 10" e	10' 10" e	9' 2"	9' 11" e	9' 11" e	8' 8" e	9' 2" e	9' 2" e	8' 3" e	8' 7" e	8' 7" e	7' 10" e	7' 8" e	7' 8" e	7' 4" e
400S162-33	33	24	19' 10"	16' 7"	14' 6"	11' 5" e	11' 4" e	9' 6"	9' 11" e	9' 11" e	8' 8" e	8' 10" e	8' 10" e	8' 0" e	8' 1" e	8' 1" e	7' 7" e	7' 6" e	7' 6" e	7' 2" e	7' 0" e	7' 0" e	6' 10" e	6' 3" e	6' 3" e	6' 3" e
400S200-33	33	12	27' 9"	22' 0"	19' 3"	17' 0"	15' 0"	12' 8"	14' 9"	13' 8"	11' 6"	13' 2" e	12' 8"	10' 8"	12' 0" e	11' 11" e	10' 1"	11' 1" e	11' 1" e	9' 7" e	10' 5" e	10' 5" e	9' 2" e	9' 4" e	9' 4" e	8' 6" e
400S200-33	33	16	25' 2"	20' 0"	17' 6"	14' 9"	13' 8"	11' 6"	12' 9" e	12' 5" e	10' 5"	11' 5" e	11' 5" e	9' 8"	10' 5" e	10' 5" e	9' 2" e	9' 8" e	9' 8" e	8' 8" e	9' 0" e	9' 0" e	8' 4" e	8' 1" e	8' 1" e	7' 8" e
400S200-33	33	24	20' 10"	17' 6"	15' 3"	12' 0" e	11' 11" e	10' 1"	10' 5" e	10' 5" e	9' 2" e	9' 4" e	9' 4" e	8' 6" e	8' 6" e	8' 6" e	8' 0" e	7' 10" e	7' 10" e	7' 7" e	7' 4" e	7' 4" e	7' 3" e	6' 7" e	6' 7" e	6' 7" e

"e" web stiffeners required at ends

Limiting Wall Heights

See Wall Heights Table Notes on page 17.

Curtain Wall 1-span

Complies with 2009 & 2012 International Building Code (IBC)

Section	F_y	Spacing	5 psf			15 psf			20 psf			25 psf			30 psf			35 psf			40 psf			50 psf		
	(ksi)	(in) oc	L/120	L/240	L/360	L/240	L/360	L/600	L/240	L/360	L/600	L/240	L/360	L/600	L/240	L/360	L/600	L/240	L/360	L/600	L/240	L/360	L/600	L/240	L/360	L/600
400S137-43	33	12	27' 4"	21' 8"	18' 11"	16' 11"	14' 9"	12' 6"	15' 4"	13' 5"	11' 4"	13' 9"	12' 6"	10' 6"	12' 7"	11' 9"	9' 11"	11' 7"	11' 2"	9' 5"	10' 10"	10' 8"	9' 0"	9' 9"	9' 9"	8' 4"
400S137-43	33	16	24' 10"	19' 8"	17' 2"	15' 4"	13' 5"	11' 4"	13' 4"	12' 2"	10' 4"	11' 11"	11' 4"	9' 7"	10' 10"	10' 8"	9' 0"	10' 1"	10' 1"	8' 6"	9' 5"	9' 5"	8' 2"	8' 5" e	8' 5" e	7' 7"
400S137-43	33	24	21' 8"	17' 2"	15' 0"	12' 7"	11' 9"	9' 11"	10' 10"	10' 8"	9' 0"	9' 9"	9' 9"	8' 4"	8' 11"	8' 11"	7' 10"	8' 3" e	8' 3" e	7' 6"	7' 8" e	7' 8" e	7' 2" e	6' 11" e	6' 11" e	6' 7" e
400S162-43	33	12	28' 7"	22' 8"	19' 10"	17' 9"	15' 6"	13' 1"	16' 1"	14' 1"	11' 10"	14' 10"	13' 1"	11' 0"	13' 6"	12' 3"	10' 4"	12' 6"	11' 8"	9' 10"	11' 9"	11' 2"	9' 5"	10' 6"	10' 4"	8' 9"
400S162-43	33	16	26' 0"	20' 7"	18' 0"	16' 1"	14' 1"	11' 10"	14' 4"	12' 9"	10' 9"	12' 10"	11' 10"	10' 0"	11' 9"	11' 2"	9' 5"	10' 10"	10' 7"	8' 11"	10' 2"	10' 2"	8' 7"	9' 1" e	9' 1" e	7' 11"
400S162-43	33	24	22' 8"	18' 0"	15' 9"	13' 6"	12' 3"	10' 4"	11' 9"	11' 2"	9' 5"	10' 6"	10' 4"	8' 9"	9' 7" e	9' 7" e	8' 3"	8' 10" e	8' 10" e	7' 10"	8' 3" e	8' 3" e	7' 6" e	7' 5" e	7' 5" e	6' 11" e
400S200-43	33	12	30' 2"	23' 11"	20' 11"	18' 8"	16' 4"	13' 9"	17' 0"	14' 10"	12' 6"	15' 9"	13' 9"	11' 7"	14' 6"	13' 0"	10' 11"	13' 5"	12' 4"	10' 5"	12' 7"	11' 9"	9' 11"	11' 3" e	10' 11"	9' 3"
400S200-43	33	16	27' 5"	21' 9"	19' 0"	17' 0"	14' 10"	12' 6"	15' 4"	13' 6"	11' 4"	13' 9"	12' 6"	10' 7"	12' 7"	11' 9"	9' 11"	11' 7"	11' 2"	9' 5"	10' 10" e	10' 8" e	9' 0"	9' 9" e	9' 9" e	8' 5" e
400S200-43	33	24	23' 11"	19' 0"	16' 7"	14' 6"	13' 0"	10' 11"	12' 7"	11' 9"	9' 11"	11' 3" e	10' 11"	9' 3"	10' 3" e	10' 3" e	8' 8"	9' 6" e	9' 6" e	8' 3" e	8' 10" e	8' 10" e	7' 11" e	7' 11" e	7' 11" e	7' 4" e
400S137-54	50	12	29' 3"	23' 2"	20' 3"	18' 1"	15' 10"	13' 4"	16' 6"	14' 5"	12' 2"	15' 3"	13' 4"	11' 3"	14' 5"	12' 7"	10' 7"	13' 8"	11' 11"	10' 1"	13' 1"	11' 5"	9' 8"	12' 2"	10' 7"	8' 11"
400S137-54	50	16	26' 7"	21' 1"	18' 5"	16' 6"	14' 5"	12' 2"	15' 0"	13' 1"	11' 0"	13' 11"	12' 2"	10' 3"	13' 1"	11' 5"	9' 8"	12' 5"	10' 10"	9' 2"	11' 10"	10' 4"	8' 9"	11' 0"	9' 8"	8' 1"
400S137-54	50	24	23' 2"	18' 5"	16' 1"	14' 5"	12' 7"	10' 7"	13' 1"	11' 5"	9' 8"	12' 2"	10' 7"	8' 11"	11' 5"	10' 0"	8' 5"	10' 10"	9' 6"	8' 0"	10' 4"	9' 1"	7' 8"	9' 3"	8' 5"	7' 1"
400S162-54	50	12	30' 8"	24' 4"	21' 3"	19' 0"	16' 7"	14' 0"	17' 3"	15' 1"	12' 9"	16' 0"	14' 0"	11' 10"	15' 1"	13' 2"	11' 1"	14' 4"	12' 6"	10' 7"	13' 8"	12' 0"	10' 1"	12' 9"	11' 1"	9' 4"
400S162-54	50	16	27' 10"	22' 1"	19' 4"	17' 3"	15' 1"	12' 9"	15' 8"	13' 8"	11' 7"	14' 7"	12' 9"	10' 9"	13' 8"	12' 0"	10' 1"	13' 0"	11' 4"	9' 7"	12' 5"	10' 10"	9' 2"	11' 7"	10' 1"	8' 6"
400S162-54	50	24	24' 4"	19' 4"	16' 10"	15' 1"	13' 2"	11' 1"	13' 8"	12' 0"	10' 1"	12' 9"	11' 1"	9' 4"	12' 0"	10' 5"	8' 10"	11' 4"	9' 11"	8' 5"	10' 10"	9' 6"	8' 0"	10' 0"	8' 10"	7' 5"
400S200-54	50	12	32' 4"	25' 8"	22' 5"	20' 1"	17' 6"	14' 9"	18' 3"	15' 11"	13' 5"	16' 11"	14' 9"	12' 6"	15' 11"	13' 11"	11' 9"	15' 1"	13' 3"	11' 2"	14' 6"	12' 8"	10' 8"	13' 5"	11' 9"	9' 11"
400S200-54	50	16	29' 5"	23' 4"	20' 5"	18' 3"	15' 11"	13' 5"	16' 7"	14' 6"	12' 2"	15' 4"	13' 5"	11' 4"	14' 6"	12' 8"	10' 8"	13' 9"	12' 0"	10' 1"	13' 2"	11' 6"	9' 8"	12' 2"	10' 8"	9' 0"
400S200-54	50	24	25' 8"	20' 5"	17' 10"	15' 11"	13' 11"	11' 9"	14' 6"	12' 8"	10' 8"	13' 5"	11' 9"	9' 11"	12' 8"	11' 0"	9' 4"	12' 0"	10' 6"	8' 10"	11' 6"	10' 0"	8' 5"	10' 6"	9' 4"	7' 10"
400S137-68	50	12	31' 3"	24' 10"	21' 8"	19' 4"	16' 11"	14' 3"	17' 7"	15' 5"	13' 0"	16' 4"	14' 3"	12' 0"	15' 5"	13' 5"	11' 4"	14' 7"	12' 9"	10' 9"	14' 0"	12' 2"	10' 4"	13' 0"	11' 4"	9' 7"
400S137-68	50	16	28' 5"	22' 7"	19' 8"	17' 7"	15' 5"	13' 0"	16' 0"	14' 0"	11' 9"	14' 10"	13' 0"	10' 11"	14' 0"	12' 2"	10' 4"	13' 3"	11' 7"	9' 9"	12' 8"	11' 1"	9' 4"	11' 9"	10' 4"	8' 8"
400S137-68	50	24	24' 10"	19' 8"	17' 2"	15' 5"	13' 5"	11' 4"	14' 0"	12' 2"	10' 4"	13' 0"	11' 4"	9' 7"	12' 2"	10' 8"	9' 0"	11' 7"	10' 2"	8' 7"	11' 1"	9' 8"	8' 2"	10' 4"	9' 0"	7' 7"
400S162-68	50	12	32' 10"	26' 0"	22' 9"	20' 4"	17' 9"	15' 0"	18' 6"	16' 2"	13' 7"	17' 2"	15' 0"	12' 8"	16' 2"	14' 1"	11' 11"	15' 4"	13' 5"	11' 4"	14' 8"	12' 10"	10' 10"	13' 7"	11' 11"	10' 0"
400S162-68	50	16	29' 10"	23' 8"	20' 8"	18' 6"	16' 2"	13' 7"	16' 9"	14' 8"	12' 4"	15' 7"	13' 7"	11' 6"	14' 8"	12' 10"	10' 10"	13' 11"	12' 2"	10' 3"	13' 4"	11' 8"	9' 10"	12' 4"	10' 10"	9' 1"
400S162-68	50	24	26' 0"	20' 8"	18' 1"	16' 2"	14' 1"	11' 11"	14' 8"	12' 10"	10' 10"	13' 7"	11' 11"	10' 0"	12' 10"	11' 2"	9' 5"	12' 2"	10' 8"	9' 0"	11' 8"	10' 2"	8' 7"	10' 10"	9' 5"	8' 0"
400S200-68	50	12	34' 8"	27' 6"	24' 0"	21' 6"	18' 9"	15' 10"	19' 6"	17' 1"	14' 5"	18' 1"	15' 10"	13' 4"	17' 1"	14' 11"	12' 7"	16' 2"	14' 2"	11' 11"	15' 6"	13' 6"	11' 5"	14' 5"	12' 7"	10' 7"
400S200-68	50	16	31' 6"	25' 0"	21' 10"	19' 6"	17' 1"	14' 5"	17' 9"	15' 6"	13' 1"	16' 6"	14' 5"	12' 2"	15' 6"	13' 6"	11' 5"	14' 9"	12' 10"	10' 10"	14' 1"	12' 4"	10' 4"	13' 1"	11' 5"	9' 8"
400S200-68	50	24	27' 6"	21' 10"	19' 1"	17' 1"	14' 11"	12' 7"	15' 6"	13' 6"	11' 5"	14' 5"	12' 7"	10' 7"	13' 6"	11' 10"	10' 0"	12' 10"	11' 3"	9' 6"	12' 4"	10' 9"	9' 1"	11' 5"	10' 0"	8' 5"
550S162-33	33	12	33' 8"	26' 9"	23' 4"	19' 7"	18' 3"	15' 5"	16' 11" e	16' 7" e	14' 0"	15' 2" e	15' 2" e	13' 0" e	13' 10" e	13' 10" e	12' 3" e	12' 10" e	12' 10" e	11' 7" e	12' 0" e	12' 0" e	11' 1" e	10' 9" e	10' 9" e	10' 4" e
550S162-33	33	16	29' 4"	24' 4"	21' 3"	16' 11" e	16' 7" e	14' 0"	14' 8" e	14' 8" e	12' 8" e	13' 2" e	13' 2" e	11' 9" e	12' 0" e	12' 0" e	11' 1" e	11' 1" e	11' 1" e	10' 6" e	10' 5" e	10' 5" e	10' 1" e	9' 3" e	9' 3" e	9' 3" e
550S162-33	33	24	24' 0"	21' 3"	18' 6"	13' 10" e	13' 10" e	12' 3" e	12' 0" e	12' 0" e	11' 1" e	10' 9" e	10' 9" e	10' 4" e	9' 9" e	9' 9" e	9' 8" e	9' 1" e	9' 1" e	9' 1" e	8' 6" e	8' 6" e	8' 6" e	7' 7" e	7' 7" e	7' 7" e
550S162-43	33	12	36' 8"	29' 1"	25' 5"	22' 9"	19' 10"	16' 9"	20' 8"	18' 1"	15' 3"	18' 9"	16' 9"	14' 2"	17' 1"	15' 9"	13' 4"	15' 10" e	15' 0"	12' 8"	14' 10" e	14' 4" e	12' 1"	13' 3" e	13' 3" e	11' 3" e
550S162-43	33	16	33' 4"	26' 5"	23' 1"	20' 8"	18' 1"	15' 3"	18' 1"	16' 5"	13' 10"	16' 3" e	15' 3"	12' 10"	14' 10" e	14' 4" e	12' 1"	13' 8" e	13' 7" e	11' 6" e	12' 10" e	12' 10" e	11' 0" e	11' 6" e	11' 6" e	10' 2" e
550S162-43	33	24	29' 1"	23' 1"	20' 2"	17' 1"	15' 9"	13' 4"	14' 10" e	14' 4" e	12' 1"	13' 3" e	13' 3" e	11' 3" e	12' 1" e	12' 1" e	10' 7" e	11' 2" e	11' 2" e	10' 0" e	10' 6" e	10' 6" e	9' 7" e	9' 4" e	9' 4" e	8' 11" e
550S162-54	50	12	39' 4"	31' 3"	27' 3"	24' 5"	21' 4"	18' 0"	22' 2"	19' 4"	16' 4"	20' 7"	18' 0"	15' 2"	19' 4"	16' 11"	14' 3"	18' 5"	16' 1"	13' 7"	17' 7"	15' 4"	13' 0"	16' 4"	14' 3"	12' 0"
550S162-54	50	16	35' 9"	28' 5"	24' 9"	22' 2"	19' 4"	16' 4"	20' 2"	17' 7"	14' 10"	18' 8"	16' 4"	13' 9"	17' 7"	15' 4"	13' 0"	16' 8"	14' 7"	12' 4"	16' 0"	14' 0"	11' 9"	14' 10"	13' 0"	10' 11"
550S162-54	50	24	31' 3"	24' 9"	21' 8"	19' 4"	16' 11"	14' 3"	17' 7"	15' 4"	13' 0"	16' 4"	14' 3"	12' 0"	15' 4"	13' 5"	11' 4"	14' 7"	12' 9"	10' 9"	14' 0"	12' 2"	10' 3"	12' 6" e	11' 4"	9' 7"
550S162-68	50	12	42' 2"	33' 6"	29' 3"	26' 2"	22' 10"	19' 3"	23' 9"	20' 9"	17' 6"	22' 1"	19' 3"	16' 3"	20' 9"	18' 2"	15' 3"	19' 9"	17' 3"	14' 6"	18' 10"	16' 6"	13' 11"	17' 6"	15' 3"	12' 11"
550S162-68	50	16	38' 4"	30' 5"	26' 7"	23' 9"	20' 9"	17' 6"	21' 7"	18' 10"	15' 11"	20' 0"	17' 6"	14' 9"	18' 10"	16' 6"	13' 11"	17' 11"	15' 8"	13' 2"	17' 2"	15' 0"	12' 7"	15' 11"	13' 11"	11' 9"
550S162-68	50	24	33' 6"	26' 7"	23' 3"	20' 9"	18' 2"	15' 3"	18' 10"	16' 6"	13' 11"	17' 6"	15' 3"	12' 11"	16' 6"	14' 5"	12' 2"	15' 8"	13' 8"	11' 6"	15' 0"	13' 1"	11' 0"	13' 11"	12' 2"	10' 3"
600S137-33	33	12	33' 0"	27' 6"	24' 0"	19' 1"	18' 9"	15' 10"	16' 6" e	16' 6" e	14' 4"	14' 9" e	14' 9" e	13' 4" e	13' 6" e	13' 6" e	12' 7" e	12' 6" e	12' 6" e	11' 11" e	11' 8" e	11' 8" e	11' 5" e	10' 5" e	10' 5" e	10' 5" e
600S137-33	33	16	28' 7"	24' 11"	21' 10"	16' 6" e	16' 6" e	14' 4"	14' 4" e	14' 4" e	13' 1" e	12' 10" e	12' 10" e	12' 1" e	11' 8" e	11' 8" e	11' 5" e	10' 10" e	10' 10" e	10' 10" e	10' 1" e	10' 1" e	10' 1" e	9' 1" e	9' 1" e	9' 1" e
600S137-33	33	24	23' 4"	21' 9"	19' 1"	13' 6" e	13' 6" e	12' 7" e	11' 8" e	11' 8" e	11' 5" e	10' 5" e	10' 5" e	10' 5" e	9' 6" e	9' 6" e	9' 6" e	8' 10" e	8' 10" e	8' 10" e	8' 3" e	8' 3" e	8' 3" e	7' 5" e	7' 5" e	7' 5" e
600S162-33	33	12	35' 6"	28' 8"	25' 0"	20' 6" e	19' 6"	16' 6"	17' 9" e	17' 9" e	15' 0"	15' 11" e	15' 11" e	13' 11" e	14' 6" e	14' 6" e	13' 1" e	13' 5" e	13' 5" e	12' 5" e	12' 7" e	12' 7" e	11' 11" e	11' 3" e	11' 3" e	11' 0" e
600S162-33	33	16	30' 9"	26' 0"	22' 9"	17' 9" e	17' 9" e	15' 0"	15' 5" e	15' 5" e	13' 7" e	13' 9" e	13' 9" e	12' 8" e	12' 7" e	12' 7" e	11' 11" e	11' 8" e	11' 8" e	11' 3" e	10' 11" e	10' 11" e	10' 10" e	9' 9" e	9' 9" e	9' 9" e
600S162-33	33	24	25' 1"	22' 9"	19' 10"	14' 6" e	14' 6" e	13' 1" e	12' 7" e	12' 7" e	11' 11" e	11' 3" e	11' 3" e	11' 0" e	10' 3" e	10' 3" e	10' 3" e	9' 6" e	9' 6" e	9' 6" e	8' 11" e	8' 11" e	8' 11" e	7' 11" e	7' 11" e	7' 11" e
600S200-33	33	12	37' 11"	30' 1"	26' 3"	21' 10" e	20' 6" e	17' 4"	18' 11" e	18' 8" e	15' 9" e	16' 11" e	16' 11" e	14' 7" e	15' 6" e	15' 6" e	13' 9" e	14' 4" e	14' 4" e	13' 1" e	13' 5" e	13' 5" e	12' 6" e	12' 0" e	12' 0" e	11' 7" e
600S200-33	33	16	32' 10"	27' 4"	23' 10"	18' 11" e	18' 8" e	15' 9" e	16' 5" e	16' 5" e	14' 3" e	14' 8" e	14' 8" e	13' 3" e	13' 5" e	13' 5" e	12' 6" e	12' 5" e	12' 5" e	11' 10" e	11' 7" e	11' 7" e	11' 4" e	10' 4" e	10' 4" e	10' 4" e
600S200-33	33	24	26' 9"	23' 10"	20' 10"	15' 6" e	15' 6" e	13' 9" e	13' 5" e	13' 5" e	12' 6" e	12' 0" e	12' 0" e	11' 7" e	10' 11" e	10' 11" e	10' 11" e	10' 1" e	10' 1" e	10' 1" e	9' 6" e	9' 6" e	9' 6" e	8' 6" e	8' 6" e	8' 6" e
600S137-43	33	12	37' 8"	29' 11"	26' 2"	22' 11"	20' 5"	17' 3"	19' 10"	18' 6"	15' 8"	17' 9"	17' 3"	14' 6"	16' 2"	16' 2"	13' 8"	15' 0" e	15' 0" e	13' 0"	14' 0" e	14' 0" e	12' 5"	12' 7" e	12' 7" e	11' 6" e
600S137-43	33	16	34' 3"	27' 2"	23' 9"	19' 10"	18' 6"	15' 8"	17' 2"	16' 10"	14' 2"	15' 5"	15' 5"	13' 2"	14' 0" e	14' 0" e	12' 5"	13' 0" e	13' 0" e	11' 9" e	12' 2" e	12' 2" e	11' 3" e	10' 10" e	10' 10" e	10' 6" e
600S137-43	33	24	28' 1"	23' 9"	20' 9"	16' 2"	16' 2"	13' 8"	14' 0" e	14' 0" e	12' 5"	12' 7" e	12' 7" e	11' 6" e	11' 6" e	11' 6" e	10' 10" e	10' 7" e	10' 7" e	10' 4" e	9' 11" e	9' 11" e	9' 10" e	8' 11" e	8' 11" e	8' 11" e
600S162-43	33	12	39' 4"	31' 2"	27' 3"	24' 4"	21' 3"	17' 11"	21' 11"	19' 4"	16' 4"	19' 8"	17' 11"	15' 2"	17' 11" e	16' 11"	14' 3"	16' 7" e	16' 1" e	13' 6"	15' 6" e	15' 4" e	12' 11"	13' 11" e	13' 11" e	12' 0" e
600S162-43	33	16	35' 9"	28' 4"	24' 9"	21' 11"	19' 4"	16' 4"	19' 0"	17' 7"	14' 10"	17' 0" e	16' 4" e	13' 9"	15' 6" e	15' 4" e	12' 11"	14' 4" e	14' 4" e	12' 4" e	13' 5" e	13' 5" e	11' 9" e	12' 0" e	12' 0" e	10' 11" e
600S162-43	33	24	31' 1"	24' 9"	21' 8"	17' 11" e	16' 11"	14' 3"	15' 6" e	15' 4" e	12' 11"	13' 11" e	13' 11" e	12' 0" e	12' 8" e	12' 8" e	11' 4" e	11' 9" e	11' 9" e	10' 9" e	11' 0" e	11' 0" e	10' 3" e	9' 10" e	9' 10" e	9' 6" e
600S200-43	33	12	41' 3"	32' 9"	28' 7"	25' 7"	22' 4"	18' 10"	22' 8"	20' 4"	17' 2"	20' 3"	18' 10"	15' 11"	18' 6" e	17' 9" e	15' 0"	17' 1" e	16' 10" e	14' 3"	16' 0" e	16' 0" e	13' 7" e	14' 4" e	14' 4" e	12' 7" e
600S200-43	33	16	37' 6"	29' 9"	26' 0"	22' 8"	20' 4"	17' 2"	19' 7" e	18' 5"	15' 7"	17' 7" e	17' 2" e	14' 5"	16' 0" e	16' 0" e	13' 7" e	14' 10" e	14' 10" e	12' 11" e	13' 10" e	13' 10" e	12' 4" e	12' 5" e	12' 5" e	11' 6" e
600S200-43	33	24	32' 0"	26' 0"	22' 9"	18' 6" e	17' 9" e	15' 0"	16' 0" e	16' 0" e	13' 7" e	14' 4" e	14' 4" e	12' 7" e	13' 1" e	13' 1" e	11' 11" e	12' 1" e	12' 1" e	11' 3" e	11' 4" e	11' 4" e	10' 9" e	10' 2" e	10' 2" e	10' 0" e
600S137-54	50	12	40' 5"	32' 1"	28' 0"	25' 1"	21' 11"	18' 5"	22' 9"	19' 11"	16' 9"	21' 2"	18' 5"	15' 7"	19' 11"	17' 4"	14' 8"	18' 11"	16' 6"	13' 11"	18' 1"	15' 9"	13' 4"	16' 9"	14' 8"	12' 4"
600S137-54	50	16	36' 9"	29' 2"	25' 6"	22' 9"	19' 11"	16' 9"	20' 8"	18' 1"	15' 3"	19' 2"	16' 9"	14' 2"	18' 1"	15' 9"	13' 4"	17' 2"	15' 0"	12' 8"	16' 4"	14' 4"	12' 1"	14' 7"	13' 4"	11' 3"
600S137-54	50	24	32' 1"	25' 6"	22' 3"	19' 11"	17' 4"	14' 8"	18' 1"	15' 9"	13' 4"	16' 9"	14' 8"	12' 4"	15' 4"	13' 9"	11' 8"	14' 3"	13' 1"	11' 1"	13' 4"	12' 6"	10' 7"	11' 11"	11' 8"	9' 10"
600S162-54	50	12	42' 2"	33' 6"	29' 3"	26' 2"	22' 10"	19' 3"	23' 9"	20' 9"	17' 6"	22' 1"	19' 3"	16' 3"	20' 9"	18' 1"	15' 3"	19' 8"	17' 3"	14' 6"	18' 10"	16' 6"	13' 11"	17' 6"	15' 3"	12' 11"
600S162-54	50	16	38' 4"	30' 5"	26' 7"	23' 9"	20' 9"	17' 6"	21' 7"	18' 10"	15' 11"	20' 0"	17' 6"	14' 9"	18' 10"	16' 6"	13' 11"	17' 11"	15' 8"	13' 2"	17' 2"	15' 0"	12' 7"	15' 11"	13' 11"	11' 9"
600S162-54	50	24	33' 6"	26' 7"	23' 3"	20' 9"	18' 1"	15' 3"	18' 10"	16' 6"	13' 11"	17' 6"	15' 3"	12' 11"	16' 6"	14' 5"	12' 2"	15' 8"	13' 8"	11' 6"	14' 8"	13' 1"	11' 0"	13' 2" e	12' 2" e	10' 3"
600S200-54	50	12	44' 4"	35' 2"	30' 9"	27' 6"	24' 0"	20' 3"	24' 11"	21' 10"	18' 5"	23' 2"	20' 3"	17' 1"	21' 10"	19' 1"	16' 1"	20' 9"	18' 1"	15' 3"	19' 10"	17' 4"	14' 7"	18' 5"	16' 1"	13' 7"
600S200-54	50	16	40' 3"	32' 0"	27' 11"	24' 11"	21' 10"	18' 5"	22' 8"	19' 10"	16' 8"	21' 1"	18' 5"	15' 6"	19' 10"	17' 4"	14' 7"	18' 10"	16' 5"	13' 10"	18' 0"	15' 9"	13' 3"	16' 7"	14' 7"	12' 4"
600S200-54	50	24	35' 2"	27' 11"	24' 5"	21' 10"	19' 1"	16' 1"	19' 10"	17' 4"	14' 7"	18' 5"	16' 1"	13' 7"	17' 4"	15' 1"	12' 9"	16' 2"	14' 4"	12' 1"	15' 1" e	13' 9"	11' 7"	13' 6" e	12' 9" e	10' 9"
600S137-68	50	12	43' 4"	34' 4"	30' 0"	26' 10"	23' 5"	19' 9"	24' 5"	21' 4"	18' 0"	22' 8"	19' 9"	16' 8"	21' 4"	18' 7"	15' 8"	20' 3"	17' 8"	14' 11"	19' 4"	16' 11"	14' 3"	18' 0"	15' 8"	13' 3"
600S137-68	50	16	39' 4"	31' 3"	27' 3"	24' 5"	21' 4"	18' 0"	22' 2"	19' 4"	16' 4"	20' 7"	18' 0"	15' 2"	19' 4"	16' 11"	14' 3"	18' 5"	16' 1"	13' 7"	17' 7"	15' 4"	12' 11"	16' 4"	14' 3"	12' 0"
600S137-68	50	24	34' 4"	27' 3"	23' 10"	21' 4"	18' 7"	15' 8"	19' 4"	16' 11"	14' 3"	18' 0"	15' 8"	13' 3"	16' 11"	14' 9"	12' 5"	16' 1"	14' 0"	11' 10"	15' 4"	13' 5"	11' 4"	13' 11"	12' 5"	10' 6"
600S162-68	50	12	45' 3"	35' 11"	31' 4"	28' 0"	24' 6"	20' 8"	25' 6"	22' 3"	18' 9"	23' 8"	20' 8"	17' 5"	22' 3"	19' 5"	16' 5"	21' 2"	18' 5"	15' 7"	20' 2"	17' 8"	14' 11"	18' 9"	16' 5"	13' 10"
600S162-68	50	16	41' 1"	32' 7"	28' 6"	25' 6"	22' 3"	18' 9"	23' 2"	20' 2"	17' 1"	21' 6"	18' 9"	15' 10"	20' 2"	17' 8"	14' 11"	19' 2"	16' 9"	14' 2"	18' 4"	16' 0"	13' 6"	17' 1"	14' 11"	12' 7"
600S162-68	50	24	35' 11"	28' 6"	24' 11"	22' 3"	19' 5"	16' 5"	20' 2"	17' 8"	14' 11"	18' 9"	16' 5"	13' 10"	17' 8"	15' 5"	13' 0"	16' 9"	14' 8"	12' 4"	16' 0"	14' 0"	11' 10"	14' 11"	13' 0"	11' 0"
600S200-68	50	12	47' 7"	37' 9"	33' 0"	29' 6"	25' 9"	21' 9"	26' 9"	23' 5"	19' 9"	24' 10"	21' 9"	18' 4"	23' 5"	20' 5"	17' 3"	22' 3"	19' 5"	16' 4"	21' 3"	18' 7"	15' 8"	19' 9"	17' 3"	14' 6"
600S200-68	50	16	43' 2"	34' 3"	29' 11"	26' 9"	23' 5"	19' 9"	24' 4"	21' 3"	17' 11"	22' 7"	19' 9"	16' 8"	21' 3"	18' 7"	15' 8"	20' 2"	17' 8"	14' 11"	19' 4"	16' 10"	14' 3"	17' 11"	15' 8"	13' 2"
600S200-68	50	24	37' 9"	29' 11"	26' 2"	23' 5"	20' 5"	17' 3"	21' 3"	18' 7"	15' 8"	19' 9"	17' 3"	14' 6"	18' 7"	16' 3"	13' 8"	17' 8"	15' 5"	13' 0"	16' 10"	14' 9"	12' 5"	15' 8"	13' 8"	11' 6"

"e" web stiffeners required at ends

Limiting Wall Heights

See Wall Heights Table Notes on page 17.

Curtain Wall 1-span

Complies with 2009 & 2012 International Building Code (IBC)

Section	F_y	Spacing	5 psf			15 psf			20 psf			25 psf			30 psf			35 psf			40 psf			50 psf		
	(ksi)	(in) oc	L/120	L/240	L/360	L/240	L/360	L/600	L/240	L/360	L/600	L/240	L/360	L/600	L/240	L/360	L/600	L/240	L/360	L/600	L/240	L/360	L/600	L/240	L/360	L/600
600S137-97	50	12	47' 11"	38' 0"	33' 2"	29' 8"	25' 11"	21' 10"	27' 0"	23' 7"	19' 10"	25' 0"	21' 10"	18' 5"	23' 7"	20' 7"	17' 4"	22' 5"	19' 7"	16' 6"	21' 5"	18' 8"	15' 9"	19' 10"	17' 4"	14' 8"
600S137-97	50	16	43' 6"	34' 6"	30' 2"	27' 0"	23' 7"	19' 10"	24' 6"	21' 5"	18' 1"	22' 9"	19' 10"	16' 9"	21' 5"	18' 8"	15' 9"	20' 4"	17' 9"	15' 0"	19' 5"	17' 0"	14' 4"	18' 1"	15' 9"	13' 4"
600S137-97	50	24	38' 0"	30' 2"	26' 4"	23' 7"	20' 7"	17' 4"	21' 5"	18' 8"	15' 9"	19' 10"	17' 4"	14' 8"	18' 8"	16' 4"	13' 9"	17' 9"	15' 6"	13' 1"	17' 0"	14' 10"	12' 6"	15' 9"	13' 9"	11' 7"
600S162-97	50	12	50' 1"	39' 9"	34' 9"	31' 1"	27' 2"	22' 11"	28' 3"	24' 8"	20' 9"	26' 2"	22' 11"	19' 4"	24' 8"	21' 6"	18' 2"	23' 5"	20' 5"	17' 3"	22' 5"	19' 7"	16' 6"	20' 9"	18' 2"	15' 4"
600S162-97	50	16	45' 6"	36' 2"	31' 7"	28' 3"	24' 8"	20' 9"	25' 8"	22' 5"	18' 11"	23' 10"	20' 9"	17' 6"	22' 5"	19' 7"	16' 6"	21' 3"	18' 7"	15' 8"	20' 4"	17' 9"	15' 0"	18' 11"	16' 6"	13' 11"
600S162-97	50	24	39' 9"	31' 7"	27' 7"	24' 8"	21' 6"	18' 2"	22' 5"	19' 7"	16' 6"	20' 9"	18' 2"	15' 4"	19' 7"	17' 1"	14' 5"	18' 7"	16' 3"	13' 8"	17' 9"	15' 6"	13' 1"	16' 6"	14' 5"	12' 2"
600S200-97	50	12	52' 10"	41' 11"	36' 7"	32' 9"	28' 7"	24' 1"	29' 9"	26' 0"	21' 11"	27' 7"	24' 1"	20' 4"	26' 0"	22' 8"	19' 2"	24' 8"	21' 7"	18' 2"	23' 7"	20' 7"	17' 5"	21' 11"	19' 2"	16' 2"
600S200-97	50	16	48' 0"	38' 1"	33' 3"	29' 9"	26' 0"	21' 11"	27' 0"	23' 7"	19' 11"	25' 1"	21' 11"	18' 6"	23' 7"	20' 7"	17' 5"	22' 5"	19' 7"	16' 6"	21' 5"	18' 9"	15' 10"	19' 11"	17' 5"	14' 8"
600S200-97	50	24	41' 11"	33' 3"	29' 1"	26' 0"	22' 8"	19' 2"	23' 7"	20' 7"	17' 5"	21' 11"	19' 2"	16' 2"	20' 7"	18' 0"	15' 2"	19' 7"	17' 1"	14' 5"	18' 9"	16' 4"	13' 10"	17' 5"	15' 2"	12' 10"
600S162-118	50	12	52' 11"	42' 0"	36' 8"	32' 10"	28' 8"	24' 2"	29' 10"	26' 0"	21' 11"	27' 8"	24' 2"	20' 5"	26' 0"	22' 9"	19' 2"	24' 9"	21' 7"	18' 3"	23' 8"	20' 8"	17' 5"	21' 11"	19' 2"	16' 2"
600S162-118	50	16	48' 1"	38' 2"	33' 4"	29' 10"	26' 0"	21' 11"	27' 1"	23' 8"	19' 11"	25' 2"	21' 11"	18' 6"	23' 8"	20' 8"	17' 5"	22' 6"	19' 8"	16' 7"	21' 6"	18' 9"	15' 10"	19' 11"	17' 5"	14' 8"
600S162-118	50	24	42' 0"	33' 4"	29' 1"	26' 0"	22' 9"	19' 2"	23' 8"	20' 8"	17' 5"	21' 11"	19' 2"	16' 2"	20' 8"	18' 1"	15' 3"	19' 8"	17' 2"	14' 6"	18' 9"	16' 5"	13' 10"	17' 5"	15' 3"	12' 10"
600S200-118	50	12	55' 10"	44' 4"	38' 9"	34' 7"	30' 3"	25' 6"	31' 5"	27' 6"	23' 2"	29' 2"	25' 6"	21' 6"	27' 6"	24' 0"	20' 3"	26' 1"	22' 10"	19' 3"	25' 0"	21' 10"	18' 5"	23' 2"	20' 3"	17' 1"
600S200-118	50	16	50' 9"	40' 3"	35' 2"	31' 5"	27' 6"	23' 2"	28' 7"	25' 0"	21' 1"	26' 6"	23' 2"	19' 7"	25' 0"	21' 10"	18' 5"	23' 9"	20' 9"	17' 6"	22' 8"	19' 10"	16' 9"	21' 1"	18' 5"	15' 6"
600S200-118	50	24	44' 4"	35' 2"	30' 9"	27' 6"	24' 0"	20' 3"	25' 0"	21' 10"	18' 5"	23' 2"	20' 3"	17' 1"	21' 10"	19' 1"	16' 1"	20' 9"	18' 1"	15' 3"	19' 10"	17' 4"	14' 7"	18' 5"	16' 1"	13' 7"
800S137-33	33	12	37' 10" e	34' 3" e	30' 2" e	21' 10" e	21' 10" e	19' 11" e	18' 11" e	18' 11" e	18' 0" e	16' 11" e	16' 11" e	16' 9" e	15' 5" e	15' 5" e	15' 5" e	14' 3" e	14' 3" e	14' 3" e	13' 4" e	13' 4" e	13' 4" e	11' 11" e	11' 11" e	11' 11" e
800S137-33	33	16	32' 9" e	31' 1" e	27' 4" e	18' 11" e	18' 11" e	18' 0" e	16' 4" e	16' 4" e	16' 4" e	14' 8" e	14' 8" e	14' 8" e	13' 4" e	13' 4" e	13' 4" e	12' 4" e	12' 4" e	12' 4" e	11' 7" e	11' 7" e	11' 7" e	10' 4" e	10' 4" e	10' 4" e
800S137-33	33	24	26' 9" e	26' 9" e	23' 10" e	15' 5" e	15' 5" e	15' 5" e	13' 4" e	13' 4" e	13' 4" e	11' 11" e	11' 11" e	11' 11" e	10' 11" e	10' 11" e	10' 11" e	10' 1" e	10' 1" e	10' 1" e	9' 5" e	9' 5" e	9' 5" e	8' 5" e	8' 5" e	8' 5" e
800S162-33	33	12	41' 0" e	35' 8" e	31' 4" e	23' 8" e	23' 8" e	20' 8" e	20' 6" e	20' 6" e	18' 9" e	18' 4" e	18' 4" e	17' 5" e	16' 9" e	16' 9" e	16' 4" e	15' 6" e	15' 6" e	15' 6" e	14' 6" e	14' 6" e	14' 6" e	13' 0" e	13' 0" e	13' 0" e
800S162-33	33	16	35' 6" e	32' 4" e	28' 5" e	20' 6" e	20' 6" e	18' 9" e	17' 9" e	17' 9" e	17' 0" e	15' 11" e	15' 11" e	15' 9" e	14' 6" e	14' 6" e	14' 6" e	13' 5" e	13' 5" e	13' 5" e	12' 7" e	12' 7" e	12' 7" e	11' 3" e	11' 3" e	11' 3" e
800S162-33	33	24	29' 0" e	28' 2" e	24' 9" e	16' 9" e	16' 9" e	16' 4" e	14' 6" e	14' 6" e	14' 6" e	13' 0" e	13' 0" e	13' 0" e	11' 10" e	11' 10" e	11' 10" e	10' 11" e	10' 11" e	10' 11" e	10' 3" e	10' 3" e	10' 3" e	9' 2" e	9' 2" e	9' 2" e
800S200-33	33	12	44' 0" e	37' 9" e	33' 0" e	25' 5" e	25' 5" e	21' 8" e	22' 0" e	22' 0" e	19' 9" e	19' 8" e	19' 8" e	18' 4" e	18' 0" e	18' 0" e	17' 3" e	16' 8" e	16' 8" e	16' 4" e	15' 7" e	15' 7" e	15' 7" e	13' 11" e	13' 11" e	13' 11" e
800S200-33	33	16	38' 1" e	34' 3" e	29' 11" e	22' 0" e	22' 0" e	19' 9" e	19' 1" e	19' 1" e	17' 11" e	17' 1" e	17' 1" e	16' 8" e	15' 7" e	15' 7" e	15' 7" e	14' 5" e	14' 5" e	14' 5" e	13' 6" e	13' 6" e	13' 6" e	12' 1" e	12' 1" e	12' 1" e
800S200-33	33	24	31' 1" e	29' 11" e	26' 2" e	18' 0" e	18' 0" e	17' 3" e	15' 7" e	15' 7" e	15' 7" e	13' 11" e	13' 11" e	13' 11" e	12' 8" e	12' 8" e	12' 8" e	11' 9" e	11' 9" e	11' 9" e	11' 0" e	11' 0" e	11' 0" e	9' 6" e	9' 6" e	9' 6" e
800S137-43	33	12	45' 10"	37' 10"	33' 1"	26' 6"	25' 10"	21' 9"	22' 11"	22' 11"	19' 9"	20' 6" e	20' 6" e	18' 4"	18' 9" e	18' 9" e	17' 3" e	17' 4" e	17' 4" e	16' 5" e	16' 3" e	16' 3" e	15' 8" e	14' 6" e	14' 6" e	14' 6" e
800S137-43	33	16	39' 9"	34' 4"	30' 0"	22' 11"	22' 11"	19' 9"	19' 10" e	19' 10" e	18' 0"	17' 9" e	17' 9" e	16' 8" e	16' 3" e	16' 3" e	15' 8" e	15' 0" e	15' 0" e	14' 11" e	14' 1" e	14' 1" e	14' 1" e	12' 7" e	12' 7" e	12' 7" e
800S137-43	33	24	32' 5"	29' 11"	26' 3"	18' 9" e	18' 9" e	17' 3" e	16' 3" e	16' 3" e	15' 8" e	14' 6" e	14' 6" e	14' 6" e	13' 3" e	13' 3" e	13' 3" e	12' 3" e	12' 3" e	12' 3" e	11' 6" e	11' 6" e	11' 6" e	10' 3" e	10' 3" e	10' 3" e
800S162-43	33	12	49' 2"	39' 4"	34' 4"	28' 6"	26' 10"	22' 7"	24' 9" e	24' 4"	20' 7"	22' 1" e	22' 1" e	19' 1"	20' 2" e	20' 2" e	17' 11" e	18' 8" e	18' 8" e	17' 1" e	17' 6" e	17' 6" e	16' 4" e	15' 8" e	15' 8" e	15' 2" e
800S162-43	33	16	42' 10"	35' 8"	31' 2"	24' 9" e	24' 4"	20' 7"	21' 5" e	21' 5" e	18' 8" e	19' 2" e	19' 2" e	17' 4" e	17' 6" e	17' 6" e	16' 4" e	16' 2" e	16' 2" e	15' 6" e	15' 2" e	15' 2" e	14' 10" e	13' 6" e	13' 6" e	13' 6" e
800S162-43	33	24	34' 11"	31' 1"	27' 3"	20' 2" e	20' 2" e	17' 11" e	17' 6" e	17' 6" e	16' 4" e	15' 8" e	15' 8" e	15' 2" e	14' 3" e	14' 3" e	14' 3" e	13' 3" e	13' 3" e	13' 3" e	12' 4" e	12' 4" e	12' 4" e	11' 1" e	11' 1" e	11' 1" e
800S200-43	33	12	51' 10"	41' 1"	35' 11"	30' 6"	28' 1"	23' 8"	26' 5" e	25' 6" e	21' 6"	23' 8" e	23' 8" e	19' 11" e	21' 7" e	21' 7" e	18' 9" e	20' 0" e	20' 0" e	17' 10" e	18' 8" e	18' 8" e	17' 1" e	16' 9" e	16' 9" e	15' 10" e
800S200-43	33	16	45' 10"	37' 4"	32' 8"	26' 5" e	25' 6" e	21' 6"	22' 11" e	22' 11" e	19' 6" e	20' 6" e	20' 6" e	18' 2" e	18' 8" e	18' 8" e	17' 1" e	17' 4" e	17' 4" e	16' 2" e	16' 2" e	16' 2" e	15' 6" e	14' 6" e	14' 6" e	14' 5" e
800S200-43	33	24	37' 5"	32' 8"	28' 6"	21' 7" e	21' 7" e	18' 9" e	18' 8" e	18' 8" e	17' 1" e	16' 9" e	16' 9" e	15' 10" e	15' 3" e	15' 3" e	14' 11" e	14' 2" e	14' 2" e	14' 2" e	13' 3" e	13' 3" e	13' 3" e	11' 10" e	11' 10" e	11' 10" e
800S137-54	50	12	51' 2"	40' 7"	35' 6"	31' 9"	27' 8"	23' 4"	28' 10"	25' 2"	21' 3"	26' 9"	23' 4"	19' 9"	25' 2"	22' 0"	18' 7"	23' 3"	20' 11"	17' 7"	21' 9"	20' 0"	16' 10"	19' 6"	18' 7"	15' 8"
800S137-54	50	16	46' 5"	36' 11"	32' 3"	28' 10"	25' 2"	21' 3"	26' 2"	22' 10"	19' 3"	23' 10"	21' 3"	17' 11"	21' 9"	20' 0"	16' 10"	20' 2"	19' 0"	16' 0"	18' 10"	18' 2"	15' 4"	16' 10"	16' 10"	14' 3"
800S137-54	50	24	40' 6"	32' 3"	28' 2"	25' 2"	22' 0"	18' 7"	21' 9"	20' 0"	16' 10"	19' 6"	18' 7"	15' 8"	17' 9"	17' 5"	14' 9"	16' 6" e	16' 6" e	14' 0"	15' 5" e	15' 5" e	13' 4"	13' 9" e	13' 9" e	12' 5" e
800S162-54	50	12	53' 2"	42' 3"	36' 10"	33' 0"	28' 10"	24' 3"	29' 11"	26' 2"	22' 1"	27' 10"	24' 3"	20' 6"	26' 2"	22' 10"	19' 3"	24' 10"	21' 9"	18' 4"	23' 5"	20' 9"	17' 6"	20' 11"	19' 3"	16' 3"
800S162-54	50	16	48' 4"	38' 4"	33' 6"	29' 11"	26' 2"	22' 1"	27' 3"	23' 9"	20' 1"	25' 3"	22' 1"	18' 7"	23' 5"	20' 9"	17' 6"	21' 8"	19' 9"	16' 8"	20' 3"	18' 10"	15' 11"	18' 1" e	17' 6" e	14' 9"
800S162-54	50	24	42' 1"	33' 6"	29' 3"	26' 2"	22' 10"	19' 3"	23' 5"	20' 9"	17' 6"	20' 11"	19' 3"	16' 3"	19' 1"	18' 2"	15' 4"	17' 8" e	17' 3" e	14' 6"	16' 6" e	16' 6" e	13' 11"	14' 9" e	14' 9" e	12' 11" e
800S200-54	50	12	55' 8"	44' 2"	38' 7"	34' 6"	30' 2"	25' 5"	31' 4"	27' 5"	23' 1"	29' 1"	25' 5"	21' 5"	27' 5"	23' 11"	20' 2"	26' 0"	22' 9"	19' 2"	24' 10"	21' 9"	18' 4"	22' 4"	20' 2"	17' 0"
800S200-54	50	16	50' 7"	40' 2"	35' 1"	31' 4"	27' 5"	23' 1"	28' 6"	24' 10"	21' 0"	26' 5"	23' 1"	19' 6"	24' 10"	21' 9"	18' 4"	23' 1"	20' 8"	17' 5"	21' 7" e	19' 9"	16' 8"	19' 4" e	18' 4" e	15' 5"
800S200-54	50	24	44' 2"	35' 1"	30' 8"	27' 5"	23' 11"	20' 2"	24' 10"	21' 9"	18' 4"	22' 4"	20' 2"	17' 0"	20' 5" e	19' 0"	16' 0"	18' 10" e	18' 0" e	15' 2"	17' 8" e	17' 3" e	14' 7" e	15' 9" e	15' 9" e	13' 6" e
800S137-68	50	12	54' 11"	43' 7"	38' 1"	34' 0"	29' 9"	25' 1"	30' 11"	27' 0"	22' 9"	28' 8"	25' 1"	21' 2"	27' 0"	23' 7"	19' 11"	25' 8"	22' 5"	18' 11"	24' 6"	21' 5"	18' 1"	22' 9"	19' 11"	16' 9"
800S137-68	50	16	49' 10"	39' 7"	34' 7"	30' 11"	27' 0"	22' 9"	28' 1"	24' 6"	20' 8"	26' 1"	22' 9"	19' 2"	24' 6"	21' 5"	18' 1"	23' 4"	20' 4"	17' 2"	22' 3"	19' 6"	16' 5"	19' 11"	18' 1"	15' 3"
800S137-68	50	24	43' 7"	34' 7"	30' 2"	27' 0"	23' 7"	19' 11"	24' 6"	21' 5"	18' 1"	22' 9"	19' 11"	16' 9"	21' 0"	18' 9"	15' 9"	19' 5"	17' 9"	15' 0"	18' 2"	17' 0"	14' 4"	16' 3"	15' 9"	13' 4"
800S162-68	50	12	57' 1"	45' 4"	39' 7"	35' 4"	30' 11"	26' 1"	32' 2"	28' 1"	23' 8"	29' 10"	26' 1"	22' 0"	28' 1"	24' 6"	20' 8"	26' 8"	23' 4"	19' 8"	25' 6"	22' 3"	18' 10"	23' 8"	20' 8"	17' 5"
800S162-68	50	16	51' 10"	41' 2"	35' 11"	32' 2"	28' 1"	23' 8"	29' 2"	25' 6"	21' 6"	27' 1"	23' 8"	20' 0"	25' 6"	22' 3"	18' 10"	24' 3"	21' 2"	17' 10"	23' 2"	20' 3"	17' 1"	21' 3"	18' 10"	15' 10"
800S162-68	50	24	45' 4"	35' 11"	31' 5"	28' 1"	24' 6"	20' 8"	25' 6"	22' 3"	18' 10"	23' 8"	20' 8"	17' 5"	22' 3"	19' 6"	16' 5"	20' 9"	18' 6"	15' 7"	19' 5"	17' 8"	14' 11"	17' 4"	16' 5"	13' 10"
800S200-68	50	12	59' 9"	47' 5"	41' 5"	37' 0"	32' 4"	27' 4"	33' 8"	29' 5"	24' 10"	31' 3"	27' 4"	23' 0"	29' 5"	25' 8"	21' 8"	27' 11"	24' 5"	20' 7"	26' 9"	23' 4"	19' 8"	24' 10"	21' 8"	18' 3"
800S200-68	50	16	54' 4"	43' 1"	37' 8"	33' 8"	29' 5"	24' 10"	30' 7"	26' 9"	22' 6"	28' 5"	24' 10"	20' 11"	26' 9"	23' 4"	19' 8"	25' 4"	22' 2"	18' 8"	24' 3"	21' 2"	17' 11"	22' 6"	19' 8"	16' 7"
800S200-68	50	24	47' 5"	37' 8"	32' 11"	29' 5"	25' 8"	21' 8"	26' 9"	23' 4"	19' 8"	24' 10"	21' 8"	18' 3"	23' 4"	20' 5"	17' 2"	22' 2"	19' 4"	16' 4"	21' 2"	18' 6"	15' 7"	19' 1" e	17' 2"	14' 6"
800S137-97	50	12	60' 10"	48' 4"	42' 2"	37' 9"	32' 11"	27' 10"	34' 3"	29' 11"	25' 3"	31' 10"	27' 10"	23' 5"	29' 11"	26' 2"	22' 1"	28' 5"	24' 10"	20' 11"	27' 2"	23' 9"	20' 1"	25' 3"	22' 1"	18' 7"
800S137-97	50	16	55' 4"	43' 11"	38' 4"	34' 3"	29' 11"	25' 3"	31' 2"	27' 2"	22' 11"	28' 11"	25' 3"	21' 4"	27' 2"	23' 9"	20' 1"	25' 10"	22' 7"	19' 0"	24' 9"	21' 7"	18' 3"	22' 11"	20' 1"	16' 11"
800S137-97	50	24	48' 4"	38' 4"	33' 6"	29' 11"	26' 2"	22' 1"	27' 2"	23' 9"	20' 1"	25' 3"	22' 1"	18' 7"	23' 9"	20' 9"	17' 6"	22' 7"	19' 9"	16' 8"	21' 7"	18' 10"	15' 11"	20' 1"	17' 6"	14' 9"
800S162-97	50	12	63' 5"	50' 4"	43' 11"	39' 3"	34' 4"	28' 11"	35' 8"	31' 2"	26' 4"	33' 2"	28' 11"	24' 5"	31' 2"	27' 3"	23' 0"	29' 7"	25' 11"	21' 10"	28' 4"	24' 9"	20' 10"	26' 4"	23' 0"	19' 5"
800S162-97	50	16	57' 7"	45' 9"	39' 11"	35' 8"	31' 2"	26' 4"	32' 5"	28' 4"	23' 11"	30' 1"	26' 4"	22' 2"	28' 4"	24' 9"	20' 10"	26' 11"	23' 6"	19' 10"	25' 9"	22' 6"	19' 0"	23' 11"	20' 10"	17' 7"
800S162-97	50	24	50' 4"	39' 11"	34' 11"	31' 2"	27' 3"	23' 0"	28' 4"	24' 9"	20' 10"	26' 4"	23' 0"	19' 5"	24' 9"	21' 7"	18' 3"	23' 6"	20' 6"	17' 4"	22' 6"	19' 8"	16' 7"	20' 10"	18' 3"	15' 5"
800S200-97	50	12	66' 6"	52' 9"	46' 1"	41' 2"	36' 0"	30' 4"	37' 5"	32' 8"	27' 7"	34' 9"	30' 4"	25' 7"	32' 8"	28' 7"	24' 1"	31' 1"	27' 2"	22' 11"	29' 9"	25' 11"	21' 11"	27' 7"	24' 1"	20' 4"
800S200-97	50	16	60' 5"	47' 11"	41' 11"	37' 5"	32' 8"	27' 7"	34' 0"	29' 9"	25' 1"	31' 7"	27' 7"	23' 3"	29' 9"	25' 11"	21' 11"	28' 3"	24' 8"	20' 10"	27' 0"	23' 7"	19' 11"	25' 1"	21' 11"	18' 6"
800S200-97	50	24	52' 9"	41' 11"	36' 7"	32' 8"	28' 7"	24' 1"	29' 9"	25' 11"	21' 11"	27' 7"	24' 1"	20' 4"	25' 11"	22' 8"	19' 1"	24' 8"	21' 6"	18' 2"	23' 7"	20' 7"	17' 5"	21' 11"	19' 1"	16' 2"
800S162-118	50	12	67' 1"	53' 3"	46' 6"	41' 7"	36' 4"	30' 8"	37' 9"	33' 0"	27' 10"	35' 1"	30' 8"	25' 10"	33' 0"	28' 10"	24' 4"	31' 4"	27' 5"	23' 1"	30' 0"	26' 2"	22' 1"	27' 10"	24' 4"	20' 6"
800S162-118	50	16	60' 11"	48' 4"	42' 3"	37' 9"	33' 0"	27' 10"	34' 4"	30' 0"	25' 3"	31' 10"	27' 10"	23' 6"	30' 0"	26' 2"	22' 1"	28' 6"	24' 10"	21' 0"	27' 3"	23' 9"	20' 1"	25' 3"	22' 1"	18' 8"
800S162-118	50	24	53' 3"	42' 3"	36' 11"	33' 0"	28' 10"	24' 4"	30' 0"	26' 2"	22' 1"	27' 10"	24' 4"	20' 6"	26' 2"	22' 11"	19' 4"	24' 10"	21' 9"	18' 4"	23' 9"	20' 9"	17' 6"	22' 1"	19' 4"	16' 3"
800S200-118	50	12	70' 5"	55' 11"	48' 10"	43' 8"	38' 2"	32' 2"	39' 8"	34' 8"	29' 3"	36' 10"	32' 2"	27' 1"	34' 8"	30' 3"	25' 6"	32' 11"	28' 9"	24' 3"	31' 6"	27' 6"	23' 2"	29' 3"	25' 6"	21' 6"
800S200-118	50	16	64' 0"	50' 9"	44' 4"	39' 8"	34' 8"	29' 3"	36' 0"	31' 6"	26' 7"	33' 5"	29' 3"	24' 8"	31' 6"	27' 6"	23' 2"	29' 11"	26' 1"	22' 0"	28' 7"	25' 0"	21' 1"	26' 7"	23' 2"	19' 7"
800S200-118	50	24	55' 11"	44' 4"	38' 9"	34' 8"	30' 3"	25' 6"	31' 6"	27' 6"	23' 2"	29' 3"	25' 6"	21' 6"	27' 6"	24' 0"	20' 3"	26' 1"	22' 10"	19' 3"	25' 0"	21' 10"	18' 5"	23' 2"	20' 3"	17' 1"

"e" web stiffeners required at ends

Wall Height Table Notes

1. Listed span for "Double Span" tables is the distance from either end to the center of interior support, with the stud continuous past the interior support.
2. Listed wind pressures represent 1.0 W calculated based on 2009 IBC or 0.6 W calculated based on 2012 IBC. For deflection calculations, listed wind pressures, have been reduced by 0.70 as allowed by IBC. The 5 psf pressure has not been reduced for deflection checks.
3. Studs must be braced against rotation and lateral movement at all supports. See typical bracing details in this catalog.
4. Studs are assumed to be adequately braced at a maximum spacing of L_u to develop full allowable moment.
5. Web crippling check is based on 1" of bearing at end supports and 3" of bearing at interior support.
6. Shear and web crippling capacity at end supports have NOT been reduced for punchouts. Shear and web crippling capacity at interior support have been reduced for the presence of punchout adjacent to the support.
7. Combined bending and shear check at interior support is based on unreinforced web per AISI S100 (Eq. C3.3.1-1). Shear capacity and combined bending and shear check at interior support have been reduced for the presence of punchouts adjacent to support.
8. See page 2 for additional notes.

Section	F_y	Spacing	5 psf			15 psf			20 psf			25 psf			30 psf			35 psf			40 psf			50 psf		
	(ksi)	(in) oc	L/120	L/240	L/360	L/240	L/360	L/600	L/240	L/360	L/600	L/240	L/360	L/600	L/240	L/360	L/600	L/240	L/360	L/600	L/240	L/360	L/600	L/240	L/360	L/600
350S162-33	33	12	25' 10" i	25' 3"	22' 0"	14' 9" i	14' 9" i	14' 6" i	12' 8" i	12' 8" i	12' 8" i	11' 3" i	11' 3" i	11' 3" i	10' 2" i	10' 2" i	10' 2" i	9' 4" i	9' 4" i	9' 4" i	8' 8" i	8' 8" i	8' 8" i	7' 8" i	7' 8" i	7' 8" i
350S162-33	33	16	22' 4" i	22' 4" i	20' 0"	12' 8" i	12' 8" i	12' 8" i	10' 10" i	10' 10" i	10' 10" i	9' 8" i	9' 8" i	9' 8" i	8' 8" i	8' 8" i	8' 8" i	8' 0" i	8' 0" i	8' 0" i	7' 5" i	7' 5" i	7' 5" i	6' 6" a	6' 6" a	6' 6" a
350S162-33	33	24	18' 2" i	18' 2" i	17' 6" i	10' 2" i	10' 2" i	10' 2" i	8' 8" i	8' 8" i	8' 8" i	7' 8" i	7' 8" i	7' 8" i	6' 11" a	6' 11" a	6' 11" a	6' 4" a	6' 4" a	6' 4" a	5' 10" a	5' 10" a	5' 10" a	5' 1" a	5' 1" a	5' 1" a
350S162-43	33	12	30' 6"	27' 5"	24' 0"	17' 5" i	17' 5" i	15' 9"	15' 0" i	15' 0" i	14' 4" i	13' 4" i	13' 4" i	13' 4" i	12' 1" i	12' 1" i	12' 1" i	11' 2" i	11' 2" i	11' 2" i	10' 4" i	10' 4" i	10' 4" i	9' 2" i	9' 2" i	9' 2" i
350S162-43	33	16	26' 4"	24' 11"	21' 9"	15' 0" i	15' 0" i	14' 4" i	12' 10" i	12' 10" i	12' 10" i	11' 5" i	11' 5" i	11' 5" i	10' 4" i	10' 4" i	10' 4" i	9' 6" i	9' 6" i	9' 6" i	8' 10" i	8' 10" i	8' 10" i	7' 9" i	7' 9" i	7' 9" i
350S162-43	33	24	21' 5" i	21' 5" i	19' 0"	12' 1" i	12' 1" i	12' 1" i	10' 4" i	10' 4" i	10' 4" i	9' 2" i	9' 2" i	9' 2" i	8' 3" i	8' 3" i	8' 3" i	7' 7" i	7' 7" i	7' 7" i	7' 0" i	7' 0" i	7' 0" i	6' 1" i	6' 1" i	6' 1" i
350S162-54	50	12	37' 0"	29' 5"	25' 8"	22' 11"	20' 1"	16' 11"	20' 3"	18' 3"	15' 4"	18' 0"	16' 11"	14' 3"	16' 4" i	15' 11"	13' 5"	15' 1" i	15' 1"	12' 9"	14' 1" i	14' 1" i	12' 2"	12' 5" i	12' 5" i	11' 4"
350S162-54	50	16	33' 8"	26' 9"	23' 4"	20' 3"	18' 3"	15' 4"	17' 5"	16' 7"	14' 0"	15' 6" i	15' 4"	13' 0"	14' 1" i	14' 1" i	12' 2"	12' 11" i	12' 11" i	11' 7"	12' 0" i	12' 0" i	11' 1"	10' 7" i	10' 7" i	10' 3" i
350S162-54	50	24	28' 11"	23' 4"	20' 5"	16' 4" i	15' 11"	13' 5"	14' 1" i	14' 1" i	12' 2"	12' 5" i	12' 5" i	11' 4"	11' 3" i	11' 3" i	10' 8"	10' 4" i	10' 4" i	10' 1" i	9' 7" i	9' 7" i	9' 7" i	8' 5" i	8' 5" i	8' 5" i
350S162-68	50	12	39' 7"	31' 5"	27' 6"	24' 7"	21' 5"	18' 1"	22' 4"	19' 6"	16' 5"	20' 3"	18' 1"	15' 3"	18' 4"	17' 0"	14' 4"	16' 11"	16' 2"	13' 8"	15' 8"	15' 6"	13' 1"	13' 10"	13' 10"	12' 1"
350S162-68	50	16	36' 0"	28' 7"	24' 11"	22' 4"	19' 6"	16' 5"	19' 7"	17' 8"	14' 11"	17' 4"	16' 5"	13' 10"	15' 8"	15' 6"	13' 1"	14' 5"	14' 5"	12' 5"	13' 4" i	13' 4"	11' 10"	11' 9" i	11' 9" i	11' 0"
350S162-68	50	24	31' 5"	24' 11"	21' 10"	18' 4"	17' 0"	14' 4"	15' 8"	15' 6"	13' 1"	13' 10"	13' 10"	12' 1"	12' 6" i	12' 6" i	11' 5"	11' 5" i	11' 5" i	10' 10"	10' 6" i	10' 6" i	10' 4"	9' 2" i	9' 2" i	9' 2"
362S137-33	33	12	24' 7"	24' 7"	21' 7"	14' 1" i	14' 1" i	14' 1" i	12' 1" i	12' 1" i	12' 1" i	10' 9" i	10' 9" i	10' 9" i	9' 9" i	9' 9" i	9' 9" i	9' 0" i	9' 0" i	9' 0" i	8' 4" i	8' 4" i	8' 4" i	7' 5" i	7' 5" i	7' 5" i
362S137-33	33	16	21' 3" i	21' 3" i	19' 8"	12' 1" i	12' 1" i	12' 1" i	10' 5" i	10' 5" i	10' 5" i	9' 3" i	9' 3" i	9' 3" i	8' 4" i	8' 4" i	8' 4" i	7' 8" i	7' 8" i	7' 8" i	7' 2" i	7' 2" i	7' 2" i	6' 4" a	6' 4" a	6' 4" a
362S137-33	33	24	17' 4" i	17' 4" i	17' 2" i	9' 9" i	9' 9" i	9' 9" i	8' 4" i	8' 4" i	8' 4" i	7' 5" i	7' 5" i	7' 5" i	6' 8" i	6' 8" i	6' 8" i	6' 1" a	6' 1" a	6' 1" a	5' 8" a	5' 8" a	5' 8" a	5' 0" a	5' 0" a	5' 0" a
362S162-33	33	12	26' 5" i	25' 11"	22' 8"	15' 1" i	15' 1" i	14' 11" i	12' 11" i	12' 11" i	12' 11" i	11' 6" i	11' 6" i	11' 6" i	10' 5" i	10' 5" i	10' 5" i	9' 7" i	9' 7" i	9' 7" i	8' 11" i	8' 11" i	8' 11" i	7' 11" i	7' 11" i	7' 11" i
362S162-33	33	16	22' 10" i	22' 10" i	20' 7"	12' 11" i	12' 11" i	12' 11" i	11' 1" i	11' 1" i	11' 1" i	9' 10" i	9' 10" i	9' 10" i	8' 11" i	8' 11" i	8' 11" i	8' 2" i	8' 2" i	8' 2" i	7' 7" i	7' 7" i	7' 7" i	6' 8" a	6' 8" a	6' 8" a
362S162-33	33	24	18' 7" i	18' 7" i	18' 0" i	10' 5" i	10' 5" i	10' 5" i	8' 11" i	8' 11" i	8' 11" i	7' 11" i	7' 11" i	7' 11" i	7' 1" a	7' 1" a	7' 1" a	6' 6" a	6' 6" a	6' 6" a	6' 0" a	6' 0" a	6' 0" a	5' 3" a	5' 3" a	5' 3" a
362S200-33	33	12	27' 8" i	27' 4" i	23' 11"	15' 9" i	15' 9" i	15' 9" i	13' 6" i	13' 6" i	13' 6" i	12' 0" i	12' 0" i	12' 0" i	10' 11" i	10' 11" i	10' 11" i	10' 0" i	10' 0" i	10' 0" i	9' 4" i	9' 4" i	9' 4" i	8' 3" i	8' 3" i	8' 3" i
362S200-33	33	16	23' 11" i	23' 11" i	21' 9"	13' 6" i	13' 6" i	13' 6" i	11' 7" i	11' 7" i	11' 7" i	10' 4" i	10' 4" i	10' 4" i	9' 4" i	9' 4" i	9' 4" i	8' 6" i	8' 6" i	8' 6" i	7' 11" a	7' 11" a	7' 11" a	6' 11" a	6' 11" a	6' 11" a
362S200-33	33	24	19' 5" i	19' 5" i	19' 0" i	10' 11" i	10' 11" i	10' 11" i	9' 4" i	9' 4" i	9' 4" i	8' 3" i	8' 3" i	8' 3" i	7' 5" a	7' 5" a	7' 5" a	6' 9" a	6' 9" a	6' 9" a	6' 3" a	6' 3" a	6' 3" a	5' 5" a	5' 5" a	5' 5" a
362S137-43	33	12	28' 11"	26' 11"	23' 6"	16' 6" i	16' 6" i	15' 6"	14' 3" i	14' 3" i	14' 1" i	12' 8" i	12' 8" i	12' 8" i	11' 6" i	11' 6" i	11' 6" i	10' 8" i	10' 8" i	10' 8" i	9' 11" i	9' 11" i	9' 11" i	8' 9" i	8' 9" i	8' 9" i
362S137-43	33	16	25' 0"	24' 5"	21' 4"	14' 3" i	14' 3" i	14' 1" i	12' 3" i	12' 3" i	12' 3" i	10' 11" i	10' 11" i	10' 11" i	9' 11" i	9' 11" i	9' 11" i	9' 1" i	9' 1" i	9' 1" i	8' 6" i	8' 6" i	8' 6" i	7' 6" i	7' 6" i	7' 6" i
362S137-43	33	24	20' 4"	20' 4"	18' 8"	11' 6" i	11' 6" i	11' 6" i	9' 11" i	9' 11" i	9' 11" i	8' 9" i	8' 9" i	8' 9" i	7' 11" i	7' 11" i	7' 11" i	7' 3" i	7' 3" i	7' 3" i	6' 9" i	6' 9" i	6' 9" i	5' 11" i	5' 11" i	5' 11" i
362S162-43	33	12	31' 2"	28' 2"	24' 8"	17' 9" i	17' 9" i	16' 3"	15' 4" i	15' 4" i	14' 9" i	13' 8" i	13' 8" i	13' 8" i	12' 5" i	12' 5" i	12' 5" i	11' 5" i	11' 5" i	11' 5" i	10' 7" i	10' 7" i	10' 7" i	9' 5" i	9' 5" i	9' 5" i
362S162-43	33	16	26' 11"	25' 7"	22' 5"	15' 4" i	15' 4" i	14' 9" i	13' 2" i	13' 2" i	13' 2" i	11' 8" i	11' 8" i	11' 8" i	10' 7" i	10' 7" i	10' 7" i	9' 9" i	9' 9" i	9' 9" i	9' 1" i	9' 1" i	9' 1" i	8' 0" i	8' 0" i	8' 0" i
362S162-43	33	24	21' 11" i	21' 11" i	19' 7"	12' 5" i	12' 5" i	12' 5" i	10' 7" i	10' 7" i	10' 7" i	9' 5" i	9' 5" i	9' 5" i	8' 6" i	8' 6" i	8' 6" i	7' 9" i	7' 9" i	7' 9" i	7' 2" i	7' 2" i	7' 2" i	6' 4" i	6' 4" i	6' 4" i
362S200-43	33	12	33' 4"	29' 9"	26' 0"	19' 0" i	19' 0" i	17' 2"	16' 4" i	16' 4" i	15' 7" i	14' 7" i	14' 7" i	14' 5" i	13' 2" i	13' 2" i	13' 2" i	12' 2" i	12' 2" i	12' 2" i	11' 4" i	11' 4" i	11' 4" i	10' 0" i	10' 0" i	10' 0" i
362S200-43	33	16	28' 10"	27' 1"	23' 8"	16' 4" i	16' 4" i	15' 7" i	14' 1" i	14' 1" i	14' 1" i	12' 6" i	12' 6" i	12' 6" i	11' 4" i	11' 4" i	11' 4" i	10' 5" i	10' 5" i	10' 5" i	9' 8" i	9' 8" i	9' 8" i	8' 6" i	8' 6" i	8' 6" i
362S200-43	33	24	23' 5" i	23' 5" i	20' 8"	13' 2" i	13' 2" i	13' 2" i	11' 4" i	11' 4" i	11' 4" i	10' 0" i	10' 0" i	10' 0" i	9' 0" i	9' 0" i	9' 0" i	8' 3" i	8' 3" i	8' 3" i	7' 7" i	7' 7" i	7' 7" i	6' 8" a	6' 8" a	6' 8" a
362S137-54	50	12	36' 3"	28' 10"	25' 2"	22' 3"	19' 8"	16' 7"	19' 3"	17' 10"	15' 1"	17' 2"	16' 7"	14' 0"	15' 7"	15' 7"	13' 2"	14' 5" i	14' 5" i	12' 6"	13' 5" i	13' 5" i	11' 11"	11' 11" i	11' 11" i	11' 1"
362S137-54	50	16	33' 0"	26' 2"	22' 10"	19' 3"	17' 10"	15' 1"	16' 7"	16' 3"	13' 8"	14' 9" i	14' 9"	12' 8"	13' 5" i	13' 5" i	11' 11"	12' 4" i	12' 4" i	11' 4"	11' 6" i	11' 6" i	10' 10"	10' 2" i	10' 2" i	10' 1" i
362S137-54	50	24	27' 5"	22' 10"	20' 0"	15' 7"	15' 7"	13' 2"	13' 5" i	13' 5" i	11' 11"	11' 11" i	11' 11" i	11' 1"	10' 9" i	10' 9" i	10' 5"	9' 11" i	9' 11" i	9' 11" i	9' 3" i	9' 3" i	9' 3" i	8' 1" i	8' 1" i	8' 1" i
362S162-54	50	12	38' 1"	30' 2"	26' 5"	23' 7"	20' 7"	17' 5"	20' 8"	18' 9"	15' 9"	18' 5"	17' 5"	14' 8"	16' 9" i	16' 4"	13' 10"	15' 5" i	15' 5" i	13' 1"	14' 5" i	14' 5" i	12' 6"	12' 9" i	12' 9" i	11' 8"
362S162-54	50	16	34' 7"	27' 5"	24' 0"	20' 8"	18' 9"	15' 9"	17' 10"	17' 0"	14' 4"	15' 10" i	15' 9"	13' 4"	14' 5" i	14' 5" i	12' 6"	13' 3" i	13' 3" i	11' 11"	12' 4" i	12' 4" i	11' 5"	10' 11" i	10' 11" i	10' 7" i
362S162-54	50	24	29' 6"	24' 0"	20' 11"	16' 9" i	16' 4"	13' 10"	14' 5" i	14' 5" i	12' 6"	12' 9" i	12' 9" i	11' 8"	11' 7" i	11' 7" i	10' 11"	10' 7" i	10' 7" i	10' 5" i	9' 10" i	9' 10" i	9' 10" i	8' 8" i	8' 8" i	8' 8" i
362S200-54	50	12	40' 3"	31' 11"	27' 11"	24' 11"	21' 9"	18' 4"	21' 8"	19' 9"	16' 8"	19' 4"	18' 4"	15' 6"	17' 7" i	17' 3"	14' 7"	16' 2" i	16' 2" i	13' 10"	15' 1" i	15' 1" i	13' 3"	13' 4" i	13' 4" i	12' 4"
362S200-54	50	16	36' 7"	29' 0"	25' 4"	21' 8"	19' 9"	16' 8"	18' 8" i	18' 0"	15' 2"	16' 7" i	16' 7" i	14' 1"	15' 1" i	15' 1" i	13' 3"	13' 10" i	13' 10" i	12' 7"	12' 11" i	12' 11" i	12' 0"	11' 5" i	11' 5" i	11' 2" i
362S200-54	50	24	31' 0"	25' 4"	22' 2"	17' 7" i	17' 3"	14' 7"	15' 1" i	15' 1" i	13' 3"	13' 4" i	13' 4" i	12' 4"	12' 1" i	12' 1" i	11' 7" i	11' 1" i	11' 1" i	11' 0" i	10' 3" i	10' 3" i	10' 3" i	9' 0" i	9' 0" i	9' 0" i
362S137-68	50	12	38' 9"	30' 9"	26' 11"	24' 0"	21' 0"	17' 8"	21' 9"	19' 1"	16' 1"	19' 5"	17' 8"	14' 11"	17' 7"	16' 8"	14' 1"	16' 3"	15' 10"	13' 4"	15' 1"	15' 1"	12' 9"	13' 5"	13' 5"	11' 10"
362S137-68	50	16	35' 3"	27' 11"	24' 5"	21' 9"	19' 1"	16' 1"	18' 9"	17' 4"	14' 7"	16' 8"	16' 1"	13' 7"	15' 1"	15' 1"	12' 9"	13' 11"	13' 11"	12' 2"	12' 11"	12' 11"	11' 7"	11' 5" i	11' 5" i	10' 9"
362S137-68	50	24	30' 9"	24' 5"	21' 4"	17' 7"	16' 8"	14' 1"	15' 1"	15' 1"	12' 9"	13' 5"	13' 5"	11' 10"	12' 1" i	12' 1" i	11' 2"	11' 1" i	11' 1" i	10' 7"	10' 3" i	10' 3" i	10' 2"	9' 0" i	9' 0" i	9' 0" i
362S162-68	50	12	40' 9"	32' 4"	28' 3"	25' 3"	22' 1"	18' 7"	22' 11"	20' 0"	16' 11"	20' 10"	18' 7"	15' 8"	18' 11"	17' 6"	14' 9"	17' 5"	16' 7"	14' 0"	16' 2"	15' 11"	13' 5"	14' 4" i	14' 4"	12' 5"
362S162-68	50	16	37' 0"	29' 4"	25' 8"	22' 11"	20' 0"	16' 11"	20' 1"	18' 2"	15' 4"	17' 10"	16' 11"	14' 3"	16' 2"	15' 11"	13' 5"	14' 11"	14' 11"	12' 9"	13' 10" i	13' 10"	12' 2"	12' 2" i	12' 2" i	11' 4"
362S162-68	50	24	32' 4"	25' 8"	22' 5"	18' 11"	17' 6"	14' 9"	16' 2"	15' 11"	13' 5"	14' 4" i	14' 4"	12' 5"	12' 11" i	12' 11" i	11' 9"	11' 10" i	11' 10" i	11' 2"	10' 11" i	10' 11" i	10' 8"	9' 7" i	9' 7" i	9' 7" i
362S200-68	50	12	43' 1"	34' 2"	29' 10"	26' 8"	23' 4"	19' 8"	24' 3"	21' 2"	17' 10"	22' 4"	19' 8"	16' 7"	20' 3"	18' 6"	15' 7"	18' 8"	17' 7"	14' 10"	17' 4"	16' 10"	14' 2"	15' 4" i	15' 4" i	13' 2"
362S200-68	50	16	39' 2"	31' 1"	27' 2"	24' 3"	21' 2"	17' 10"	21' 7"	19' 3"	16' 3"	19' 2"	17' 10"	15' 1"	17' 4"	16' 10"	14' 2"	15' 11" i	15' 11"	13' 6"	14' 9" i	14' 9"	12' 11"	13' 0" i	13' 0" i	12' 0"
362S200-68	50	24	34' 2"	27' 2"	23' 8"	20' 3"	18' 6"	15' 7"	17' 4"	16' 10"	14' 2"	15' 4" i	15' 4"	13' 2"	13' 9" i	13' 9" i	12' 5"	12' 7" i	12' 7" i	11' 9"	11' 8" i	11' 8" i	11' 3"	10' 2" i	10' 2" i	10' 2" i
400S137-33	33	12	26' 0" i	26' 0" i	23' 4"	14' 10" i	14' 10" i	14' 10" i	12' 10" i	12' 10" i	12' 10" i	11' 5" i	11' 5" i	11' 5" i	10' 4" i	10' 4" i	10' 4" i	9' 7" i	9' 7" i	9' 7" i	8' 11" i	8' 11" i	8' 11" i	7' 11" i	7' 11" i	7' 11" i
400S137-33	33	16	22' 6" i	22' 6" i	21' 2"	12' 10" i	12' 10" i	12' 10" i	11' 0" i	11' 0" i	11' 0" i	9' 10" i	9' 10" i	9' 10" i	8' 11" i	8' 11" i	8' 11" i	8' 2" i	8' 2" i	8' 2" i	7' 7" i	7' 7" i	7' 7" i	6' 9" a	6' 9" a	6' 9" a
400S137-33	33	24	18' 4" i	18' 4" i	18' 4" i	10' 4" i	10' 4" i	10' 4" i	8' 11" i	8' 11" i	8' 11" i	7' 11" i	7' 11" i	7' 11" i	7' 2" a	7' 2" a	7' 2" a	6' 6" a	6' 6" a	6' 6" a	6' 1" a	6' 1" a	6' 1" a	5' 4" a	5' 4" a	5' 4" a
400S162-33	33	12	27' 11" i	27' 11" i	24' 5"	15' 11" i	15' 11" i	15' 11" i	13' 9" i	13' 9" i	13' 9" i	12' 3" i	12' 3" i	12' 3" i	11' 1" i	11' 1" i	11' 1" i	10' 3" i	10' 3" i	10' 3" i	9' 6" i	9' 6" i	9' 6" i	8' 5" a	8' 5" a	8' 5" a
400S162-33	33	16	24' 2" i	24' 2" i	22' 2"	13' 9" i	13' 9" i	13' 9" i	11' 10" i	11' 10" i	11' 10" i	10' 6" i	10' 6" i	10' 6" i	9' 6" i	9' 6" i	9' 6" i	8' 9" i	8' 9" i	8' 9" i	8' 1" a	8' 1" a	8' 1" a	7' 2" a	7' 2" a	7' 2" a
400S162-33	33	24	19' 8" i	19' 8" i	19' 5" i	11' 1" i	11' 1" i	11' 1" i	9' 6" i	9' 6" i	9' 6" i	8' 5" a	8' 5" a	8' 5" a	7' 7" a	7' 7" a	7' 7" a	6' 11" a	6' 11" a	6' 11" a	6' 5" a	6' 5" a	6' 5" a	5' 8" a	5' 8" a	5' 8" a
400S200-33	33	12	29' 3" i	29' 3" i	25' 9"	16' 8" i	16' 8" i	16' 8" i	14' 4" i	14' 4" i	14' 4" i	12' 9" i	12' 9" i	12' 9" i	11' 7" i	11' 7" i	11' 7" i	10' 8" i	10' 8" i	10' 8" i	9' 11" i	9' 11" i	9' 11" i	8' 9" a	8' 9" a	8' 9" a
400S200-33	33	16	25' 3" i	25' 3" i	23' 5"	14' 4" i	14' 4" i	14' 4" i	12' 4" i	12' 4" i	12' 4" i	10' 11" i	10' 11" i	10' 11" i	9' 11" i	9' 11" i	9' 11" i	9' 1" a	9' 1" a	9' 1" a	8' 5" a	8' 5" a	8' 5" a	7' 5" a	7' 5" a	7' 5" a
400S200-33	33	24	20' 7" i	20' 7" i	20' 5" i	11' 7" i	11' 7" i	11' 7" i	9' 11" i	9' 11" i	9' 11" i	8' 9" a	8' 9" a	8' 9" a	7' 11" a	7' 11" a	7' 11" a	7' 3" a	7' 3" a	7' 3" a	6' 8" a	6' 8" a	6' 8" a	5' 10" a	5' 10" a	5' 10" a
400S137-43	33	12	30' 8"	29' 1"	25' 5"	17' 7" i	17' 7" i	16' 9"	15' 2" i	15' 2" i	15' 2" i	13' 6" i	13' 6" i	13' 6" i	12' 3" i	12' 3" i	12' 3" i	11' 4" i	11' 4" i	11' 4" i	10' 7" i	10' 7" i	10' 7" i	9' 5" i	9' 5" i	9' 5" i
400S137-43	33	16	26' 6"	26' 5"	23' 1"	15' 2" i	15' 2" i	15' 2" i	13' 1" i	13' 1" i	13' 1" i	11' 8" i	11' 8" i	11' 8" i	10' 7" i	10' 7" i	10' 7" i	9' 9" i	9' 9" i	9' 9" i	9' 1" i	9' 1" i	9' 1" i	8' 0" i	8' 0" i	8' 0" i
400S137-43	33	24	21' 7" i	21' 7" i	20' 2"	12' 3" i	12' 3" i	12' 3" i	10' 7" i	10' 7" i	10' 7" i	9' 5" i	9' 5" i	9' 5" i	8' 6" i	8' 6" i	8' 6" i	7' 10" i	7' 10" i	7' 10" i	7' 3" i	7' 3" i	7' 3" i	6' 5" i	6' 5" i	6' 5" i
400S162-43	33	12	33' 0"	30' 5"	26' 7"	18' 11" i	18' 11" i	17' 6"	16' 4" i	16' 4" i	15' 11" i	14' 6" i	14' 6" i	14' 6" i	13' 2" i	13' 2" i	13' 2" i	12' 2" i	12' 2" i	12' 2" i	11' 4" i	11' 4" i	11' 4" i	10' 1" i	10' 1" i	10' 1" i
400S162-43	33	16	28' 6"	27' 8"	24' 2"	16' 4" i	16' 4" i	15' 11" i	14' 0" i	14' 0" i	14' 0" i	12' 6" i	12' 6" i	12' 6" i	11' 4" i	11' 4" i	11' 4" i	10' 5" i	10' 5" i	10' 5" i	9' 9" i	9' 9" i	9' 9" i	8' 7" i	8' 7" i	8' 7" i
400S162-43	33	24	23' 3" i	23' 3" i	21' 1"	13' 2" i	13' 2" i	13' 2" i	11' 4" i	11' 4" i	11' 4" i	10' 1" i	10' 1" i	10' 1" i	9' 1" i	9' 1" i	9' 1" i	8' 4" i	8' 4" i	8' 4" i	7' 9" i	7' 9" i	7' 9" i	6' 10" a	6' 10" a	6' 10" a

"a" web stiffeners required at ends and interior supports. "e" web stiffeners required at ends "i" web stiffeners required at interior support.

Limiting Wall Heights

See Wall Heights Table Notes on page 20.

Curtain Wall 2-span

Complies with 2009 & 2012 International Building Code (IBC)

Section	F_y	Spacing	5 psf			15 psf			20 psf			25 psf			30 psf			35 psf			40 psf			50 psf		
	(ksi)	(in) o.c	L/120	L/240	L/360	L/240	L/360	L/600	L/240	L/360	L/600	L/240	L/360	L/600	L/240	L/360	L/600	L/240	L/360	L/600	L/240	L/360	L/600	L/240	L/360	L/600
400S200-43	33	12	35' 4"	32' 1"	28' 1"	20' 3" i	20' 3" i	18' 6"	17' 5" i	17' 5" i	16' 9" i	15' 6" i	15' 6" i	15' 6" i	14' 1" i	14' 1" i	14' 1" i	13' 0" i	13' 0" i	13' 0" i	12' 1" i	12' 1" i	12' 1" i	10' 9" i	10' 9" i	10' 9" i
400S200-43	33	16	30' 7"	29' 2"	25' 6"	17' 5" i	17' 5" i	16' 9" i	15' 0" i	15' 0" i	15' 0" i	13' 4" i	13' 4" i	13' 4" i	12' 1" i	12' 1" i	12' 1" i	11' 1" i	11' 1" i	11' 1" i	10' 4" i	10' 4" i	10' 4" i	9' 2" i	9' 2" i	9' 2" i
400S200-43	33	24	24' 10" i	24' 10" i	22' 3"	14' 1" i	14' 1" i	14' 1" i	12' 1" i	12' 1" i	12' 1" i	10' 9" i	10' 9" i	10' 9" i	9' 8" i	9' 8" i	9' 8" i	8' 11" i	8' 11" i	8' 11" i	8' 3" i	8' 3" i	8' 3" i	7' 3" a	7' 3" a	7' 3" a
400S137-54	50	12	39' 2"	31' 1"	27' 2"	23' 8"	21' 3"	17' 11"	20' 5"	19' 3"	16' 3"	18' 3"	17' 11"	15' 1"	16' 7" i	16' 7" i	14' 2"	15' 4" i	15' 4" i	13' 6"	14' 4" i	14' 4" i	12' 11"	12' 9" i	12' 9" i	12' 0"
400S137-54	50	16	35' 7"	28' 3"	24' 8"	20' 5"	19' 3"	16' 3"	17' 8"	17' 6"	14' 9"	15' 9" i	15' 9" i	13' 9"	14' 4" i	14' 4" i	12' 11"	13' 2" i	13' 2" i	12' 3"	12' 3" i	12' 3" i	11' 9"	10' 11" i	10' 11" i	10' 11" i
400S137-54	50	24	29' 1"	24' 8"	21' 7"	16' 7" i	16' 7" i	14' 2"	14' 4" i	14' 4" i	12' 11"	12' 9" i	12' 9" i	12' 0"	11' 7" i	11' 7" i	11' 3" i	10' 8" i	10' 8" i	10' 8" i	9' 11" i	9' 11" i	9' 11" i	8' 9" i	8' 9" i	8' 9" i
400S162-54	50	12	41' 1"	32' 7"	28' 6"	25' 6"	22' 3"	18' 9"	22' 0"	20' 3"	17' 1"	19' 7" i	18' 9"	15' 10"	17' 10" i	17' 8"	14' 11"	16' 6" i	16' 6" i	14' 2"	15' 4" i	15' 4" i	13' 6"	13' 8" i	13' 8" i	12' 7"
400S162-54	50	16	37' 4"	29' 8"	25' 11"	22' 0"	20' 3"	17' 1"	19' 0" i	18' 4"	15' 6"	16' 11" i	16' 11" i	14' 5"	15' 4" i	15' 4" i	13' 6"	14' 2" i	14' 2" i	12' 10"	13' 2" i	13' 2" i	12' 4"	11' 8" i	11' 8" i	11' 5" i
400S162-54	50	24	31' 4"	25' 11"	22' 7"	17' 10" i	17' 8"	14' 11"	15' 4" i	15' 4" i	13' 6"	13' 8" i	13' 8" i	12' 7"	12' 4" i	12' 4" i	11' 10" i	11' 5" i	11' 5" i	11' 3" i	10' 7" i	10' 7" i	10' 7" i	9' 4" i	9' 4" i	9' 4" i
400S200-54	50	12	43' 5"	34' 5"	30' 1"	26' 9"	23' 6"	19' 10"	23' 1"	21' 4"	18' 0"	20' 7" i	19' 10"	16' 8"	18' 8" i	18' 8" i	15' 9"	17' 3" i	17' 3" i	14' 11"	16' 1" i	16' 1" i	14' 3"	14' 3" i	14' 3" i	13' 3"
400S200-54	50	16	39' 5"	31' 3"	27' 4"	23' 1"	21' 4"	18' 0"	19' 11" i	19' 5"	16' 4"	17' 8" i	17' 8" i	15' 2"	16' 1" i	16' 1" i	14' 3"	14' 10" i	14' 10" i	13' 7"	13' 10" i	13' 10" i	13' 0" i	12' 3" i	12' 3" i	12' 1" i
400S200-54	50	24	32' 10"	27' 4"	23' 10"	18' 8" i	18' 8" i	15' 9"	16' 1" i	16' 1" i	14' 3"	14' 3" i	14' 3" i	13' 3"	12' 11" i	12' 11" i	12' 6" i	11' 11" i	11' 11" i	11' 10" i	11' 1" i	11' 1" i	11' 1" i	9' 9" i	9' 9" i	9' 9" i
400S137-68	50	12	41' 11"	33' 3"	29' 1"	26' 0"	22' 8"	19' 2"	23' 4"	20' 7"	17' 5"	20' 10"	19' 2"	16' 2"	18' 11"	18' 0"	15' 2"	17' 6"	17' 1"	14' 5"	16' 4"	16' 4"	13' 10"	14' 6"	14' 6"	12' 10"
400S137-68	50	16	38' 1"	30' 3"	26' 5"	23' 4"	20' 7"	17' 5"	20' 1"	18' 9"	15' 10"	17' 11"	17' 5"	14' 8"	16' 4"	16' 4"	13' 10"	15' 0"	15' 0"	13' 1"	14' 0" i	14' 0" i	12' 6"	12' 5" i	12' 5" i	11' 8"
400S137-68	50	24	33' 2"	26' 5"	23' 1"	18' 11"	18' 0"	15' 2"	16' 4"	16' 4"	13' 10"	14' 6"	14' 6"	12' 10"	13' 2" i	13' 2" i	12' 1"	12' 1" i	12' 1" i	11' 5"	11' 3" i	11' 3" i	10' 11"	9' 11" i	9' 11" i	9' 11" i
400S162-68	50	12	44' 0"	34' 11"	30' 6"	27' 3"	23' 10"	20' 1"	24' 9"	21' 8"	18' 3"	22' 4"	20' 1"	16' 11"	20' 4"	18' 11"	15' 11"	18' 9"	17' 11"	15' 2"	17' 6"	17' 2"	14' 6"	15' 7" i	15' 7" i	13' 5"
400S162-68	50	16	39' 11"	31' 9"	27' 8"	24' 9"	21' 8"	18' 3"	21' 8"	19' 8"	16' 7"	19' 3"	18' 3"	15' 5"	17' 6"	17' 2"	14' 6"	16' 2" i	16' 2"	13' 9"	15' 0" i	15' 0" i	13' 2"	13' 4" i	13' 4" i	12' 3"
400S162-68	50	24	34' 11"	27' 8"	24' 2"	20' 4"	18' 11"	15' 11"	17' 6"	17' 2"	14' 6"	15' 7" i	15' 7" i	13' 5"	14' 1" i	14' 1" i	12' 8"	12' 11" i	12' 11" i	12' 0"	12' 0" i	12' 0" i	11' 6"	10' 7" i	10' 7" i	10' 7" i
400S200-68	50	12	46' 6"	36' 11"	32' 3"	28' 10"	25' 2"	21' 3"	26' 2"	22' 10"	19' 3"	24' 0"	21' 3"	17' 11"	21' 10"	20' 0"	16' 10"	20' 1"	19' 0"	16' 0"	18' 9" i	18' 2"	15' 4"	16' 8" i	16' 8" i	14' 2"
400S200-68	50	16	42' 3"	33' 6"	29' 3"	26' 2"	22' 10"	19' 3"	23' 2"	20' 9"	17' 6"	20' 8"	19' 3"	16' 3"	18' 9" i	18' 2"	15' 4"	17' 3" i	17' 3"	14' 6"	16' 1" i	16' 1" i	13' 11"	14' 3" i	14' 3" i	12' 11"
400S200-68	50	24	36' 11"	29' 3"	25' 7"	21' 10"	20' 0"	16' 10"	18' 9" i	18' 2"	15' 4"	16' 8" i	16' 8" i	14' 2"	15' 1" i	15' 1" i	13' 4"	13' 10" i	13' 10" i	12' 8"	12' 10" i	12' 10" i	12' 2"	11' 4" i	11' 4" i	11' 3" i
550S162-33	33	12	33' 11" i	33' 11" i	31' 4"	19' 7" i	19' 7" i	19' 7" i	16' 11" i	16' 11" i	16' 11" i	15' 2" i	15' 2" i	15' 2" i	13' 10" a	13' 10" a	13' 10" a	12' 10" a	12' 10" a	12' 10" a	12' 0" a	12' 0" a	12' 0" a	10' 9" a	10' 9" a	10' 9" a
550S162-33	33	16	29' 4" i	29' 4" i	28' 5" i	16' 11" i	16' 11" i	16' 11" i	14' 8" i	14' 8" i	14' 8" i	13' 2" a	13' 2" a	13' 2" a	12' 0" a	12' 0" a	12' 0" a	11' 1" a	11' 1" a	11' 1" a	10' 5" a	10' 5" a	10' 5" a	9' 2" a	9' 2" a	9' 2" a
550S162-33	33	24	24' 0" i	24' 0" i	24' 0" i	13' 10" a	13' 10" a	13' 10" a	12' 0" a	12' 0" a	12' 0" a	10' 9" a	10' 9" a	10' 9" a	9' 9" a	9' 9" a	9' 9" a	8' 11" a	8' 11" a	8' 11" a	8' 3" a	8' 3" a	8' 3" a	7' 2" a	7' 2" a	7' 2" a
550S162-43	33	12	41' 10"	39' 0"	34' 1"	24' 2" i	24' 2" i	22' 6" i	20' 11" i	20' 11" i	20' 5" i	18' 9" i	18' 9" i	18' 9" i	17' 1" i	17' 1" i	17' 1" i	15' 10" i	15' 10" i	15' 10" i	14' 10" i	14' 10" i	14' 10" i	13' 3" i	13' 3" i	13' 3" i
550S162-43	33	16	36' 3"	35' 6"	31' 0"	20' 11" i	20' 11" i	20' 5" i	18' 1" i	18' 1" i	18' 1" i	16' 3" i	16' 3" i	16' 3" i	14' 10" i	14' 10" i	14' 10" i	13' 8" i	13' 8" i	13' 8" i	12' 10" i	12' 10" i	12' 10" i	11' 6" a	11' 6" a	11' 6" a
550S162-43	33	24	29' 7" i	29' 7" i	27' 1"	17' 1" i	17' 1" i	17' 1" i	14' 10" i	14' 10" i	14' 10" i	13' 3" i	13' 3" i	13' 3" i	12' 1" a	12' 1" a	12' 1" a	11' 2" a	11' 2" a	11' 2" a	10' 6" a	10' 6" a	10' 6" a	9' 3" a	9' 3" a	9' 3" a
550S162-54	50	12	52' 9"	41' 10"	36' 7"	32' 4"	28' 7"	24' 1"	28' 0"	25' 11"	21' 11"	25' 1" i	24' 1"	20' 4"	22' 10" i	22' 8" i	19' 1"	21' 2" i	21' 2" i	18' 2"	19' 10" i	19' 10" i	17' 4"	17' 9" i	17' 9" i	16' 2" i
550S162-54	50	16	47' 11"	38' 1"	33' 3"	28' 0"	25' 11"	21' 11"	24' 3" i	23' 7"	19' 11"	21' 8" i	21' 8" i	18' 6"	19' 10" i	19' 10" i	17' 4"	18' 4" i	18' 4" i	16' 6"	17' 2" i	17' 2" i	15' 9" i	15' 4" i	15' 4" i	14' 8" i
550S162-54	50	24	39' 7"	33' 3"	29' 0"	22' 10" i	22' 8" i	19' 1"	19' 10" i	19' 10" i	17' 4"	17' 9" i	17' 9" i	16' 2" i	16' 2" i	16' 2" i	15' 2" i	15' 0" i	15' 0" i	14' 5" i	14' 0" i	14' 0" i	13' 9" i	12' 6" i	12' 6" i	12' 6" i
550S162-68	50	12	56' 6"	44' 10"	39' 2"	35' 1"	30' 7"	25' 10"	31' 10"	27' 10"	23' 6"	29' 4"	25' 10"	21' 9"	26' 9"	24' 4"	20' 6"	24' 10" i	23' 1"	19' 6"	23' 2" i	22' 1"	18' 7"	20' 9" i	20' 6" i	17' 3"
550S162-68	50	16	51' 4"	40' 9"	35' 7"	31' 10"	27' 10"	23' 6"	28' 5"	25' 3"	21' 4"	25' 5"	23' 6"	19' 9"	23' 2" i	22' 1"	18' 7"	21' 6" i	21' 0" i	17' 8"	20' 1" i	20' 1" i	16' 11"	18' 0" i	18' 0" i	15' 8"
550S162-68	50	24	44' 10"	35' 7"	31' 1"	26' 9"	24' 4"	20' 6"	23' 2" i	22' 1"	18' 7"	20' 9" i	20' 6" i	17' 3"	18' 11" i	18' 11" i	16' 3"	17' 6" i	17' 6" i	15' 5"	16' 5" i	16' 5" i	14' 9" i	14' 8" i	14' 8" i	13' 9" i
600S137-33	33	12	33' 0" i	33' 0" i	32' 0" i	19' 1" i	19' 1" i	19' 1" i	16' 6" i	16' 6" i	16' 6" i	14' 9" i	14' 9" i	14' 9" i	13' 6" i	13' 6" i	13' 6" i	12' 5" a	12' 5" a	12' 5" a	11' 7" a	11' 7" a	11' 7" a	10' 2" a	10' 2" a	10' 2" a
600S137-33	33	16	28' 7" i	28' 7" i	28' 7" i	16' 6" i	16' 6" i	16' 6" i	14' 4" i	14' 4" i	14' 4" i	12' 9" a	12' 9" a	12' 9" a	11' 7" a	11' 7" a	11' 7" a	10' 7" a	10' 7" a	10' 7" a	9' 10" a	9' 10" a	9' 10" a	8' 7" a	8' 7" a	8' 7" a
600S137-33	33	24	23' 4" i	23' 4" i	23' 4" i	13' 6" i	13' 6" i	13' 6" i	11' 7" a	11' 7" a	11' 7" a	10' 2" a	10' 2" a	10' 2" a	9' 2" a	9' 2" a	9' 2" a	8' 4" a	8' 4" a	8' 4" a	7' 9" a	7' 9" a	7' 9" a	6' 9" a	6' 9" a	6' 9" a
600S162-33	33	12	35' 6" i	35' 6" i	33' 7"	20' 6" i	20' 6" i	20' 6" i	17' 9" i	17' 9" i	17' 9" i	15' 11" i	15' 11" i	15' 11" i	14' 6" a	14' 6" a	14' 6" a	13' 5" a	13' 5" a	13' 5" a	12' 7" a	12' 7" a	12' 7" a	11' 3" a	11' 3" a	11' 3" a
600S162-33	33	16	30' 9" i	30' 9" i	30' 6" i	17' 9" i	17' 9" i	17' 9" i	15' 5" a	15' 5" a	15' 5" a	13' 9" a	13' 9" a	13' 9" a	12' 7" a	12' 7" a	12' 7" a	11' 8" a	11' 8" a	11' 8" a	10' 10" a	10' 10" a	10' 10" a	9' 6" a	9' 6" a	9' 6" a
600S162-33	33	24	25' 1" i	25' 1" i	25' 1" i	14' 6" a	14' 6" a	14' 6" a	12' 7" a	12' 7" a	12' 7" a	11' 3" a	11' 3" a	11' 3" a	10' 1" a	10' 1" a	10' 1" a	9' 2" a	9' 2" a	9' 2" a	8' 5" a	8' 5" a	8' 5" a	7' 4" a	7' 4" a	7' 4" a
600S200-33	33	12	37' 11" i	37' 11" i	35' 3"	21' 10" i	21' 10" i	21' 10" i	18' 11" i	18' 11" i	18' 11" i	16' 11" a	16' 11" a	16' 11" a	15' 6" a	15' 6" a	15' 6" a	14' 3" a	14' 3" a	14' 3" a	13' 3" a	13' 3" a	13' 3" a	11' 7" a	11' 7" a	11' 7" a
600S200-33	33	16	32' 10" i	32' 10" i	32' 0" i	18' 11" i	18' 11" i	18' 11" i	16' 5" a	16' 5" a	16' 5" a	14' 8" a	14' 8" a	14' 8" a	13' 3" a	13' 3" a	13' 3" a	12' 1" a	12' 1" a	12' 1" a	11' 2" a	11' 2" a	11' 2" a	9' 9" a	9' 9" a	9' 9" a
600S200-33	33	24	26' 9" i	26' 9" i	26' 9" i	15' 6" a	15' 6" a	15' 6" a	13' 3" a	13' 3" a	13' 3" a	11' 7" a	11' 7" a	11' 7" a	10' 5" a	10' 5" a	10' 5" a	9' 5" a	9' 5" a	9' 5" a	8' 8" a	8' 8" a	8' 8" a	7' 6" a	7' 6" a	7' 6" a
600S137-43	33	12	39' 8"	39' 8"	35' 0"	22' 11" i	22' 11" i	22' 11" i	19' 10" i	19' 10" i	19' 10" i	17' 9" i	17' 9" i	17' 9" i	16' 2" i	16' 2" i	16' 2" i	15' 0" i	15' 0" i	15' 0" i	14' 0" i	14' 0" i	14' 0" i	12' 7" i	12' 7" i	12' 7" i
600S137-43	33	16	34' 5"	34' 5"	31' 10"	19' 10" i	19' 10" i	19' 10" i	17' 2" i	17' 2" i	17' 2" i	15' 5" i	15' 5" i	15' 5" i	14' 0" i	14' 0" i	14' 0" i	13' 0" i	13' 0" i	13' 0" i	12' 2" i	12' 2" i	12' 2" i	10' 10" a	10' 10" a	10' 10" a
600S137-43	33	24	28' 1" i	28' 1" i	27' 10" i	16' 2" i	16' 2" i	16' 2" i	14' 0" i	14' 0" i	14' 0" i	12' 7" i	12' 7" i	12' 7" i	11' 6" i	11' 6" i	11' 6" i	10' 7" a	10' 7" a	10' 7" a	9' 10" a	9' 10" a	9' 10" a	8' 9" a	8' 9" a	8' 9" a
600S162-43	33	12	43' 11"	41' 10"	36' 6"	25' 4" i	25' 4" i	24' 1" i	21' 11" i	21' 11" i	21' 10" i	19' 8" i	19' 8" i	19' 8" i	17' 11" i	17' 11" i	17' 11" i	16' 7" i	16' 7" i	16' 7" i	15' 6" i	15' 6" i	15' 6" i	13' 11" a	13' 11" a	13' 11" a
600S162-43	33	16	38' 0"	38' 0"	33' 2"	21' 11" i	21' 11" i	21' 10" i	19' 0" i	19' 0" i	19' 0" i	17' 0" i	17' 0" i	17' 0" i	15' 6" i	15' 6" i	15' 6" i	14' 4" i	14' 4" i	14' 4" i	13' 5" a	13' 5" a	13' 5" a	12' 0" a	12' 0" a	12' 0" a
600S162-43	33	24	31' 1" i	31' 1" i	29' 0"	17' 11" i	17' 11" i	17' 11" i	15' 6" i	15' 6" i	15' 6" i	13' 11" a	13' 11" a	13' 11" a	12' 8" a	12' 8" a	12' 8" a	11' 9" a	11' 9" a	11' 9" a	11' 0" a	11' 0" a	11' 0" a	9' 10" a	9' 10" a	9' 10" a
600S200-43	33	12	45' 4"	43' 11"	38' 4"	26' 2" i	26' 2" i	25' 3" i	22' 8" i	22' 8" i	22' 8" i	20' 3" i	20' 3" i	20' 3" i	18' 6" i	18' 6" i	18' 6" i	17' 1" i	17' 1" i	17' 1" i	16' 0" i	16' 0" i	16' 0" i	14' 4" a	14' 4" a	14' 4" a
600S200-43	33	16	39' 3" i	39' 3" i	34' 10"	22' 8" i	22' 8" i	22' 8" i	19' 7" i	19' 7" i	19' 7" i	17' 7" i	17' 7" i	17' 7" i	16' 0" i	16' 0" i	16' 0" i	14' 10" a	14' 10" a	14' 10" a	13' 10" a	13' 10" a	13' 10" a	12' 5" a	12' 5" a	12' 5" a
600S200-43	33	24	32' 0" i	32' 0" i	30' 5" i	18' 6" i	18' 6" i	18' 6" i	16' 0" i	16' 0" i	16' 0" i	14' 4" a	14' 4" a	14' 4" a	13' 1" a	13' 1" a	13' 1" a	12' 1" a	12' 1" a	12' 1" a	11' 4" a	11' 4" a	11' 4" a	10' 0" a	10' 0" a	10' 0" a
600S137-54	50	12	53' 3"	43' 0"	37' 7"	30' 9"	29' 4"	24' 9"	26' 7"	26' 7"	22' 6"	23' 10" i	23' 10" i	20' 10"	21' 9" i	21' 9" i	19' 8"	20' 1" i	20' 1" i	18' 8"	18' 10" i	18' 10" i	17' 10" i	16' 10" i	16' 10" i	16' 7" i
600S137-54	50	16	46' 1"	39' 1"	34' 2"	26' 7"	26' 7"	22' 6"	23' 1" i	23' 1" i	20' 5"	20' 7" i	20' 7" i	19' 0"	18' 10" i	18' 10" i	17' 10" i	17' 5" i	17' 5" i	16' 11" i	16' 4" i	16' 4" i	16' 3" i	14' 7" i	14' 7" i	14' 7" i
600S137-54	50	24	37' 8"	34' 2"	29' 10"	21' 9" i	21' 9" i	19' 8"	18' 10" i	18' 10" i	17' 10" i	16' 10" i	16' 10" i	16' 7" i	15' 4" i	15' 4" i	15' 4" i	14' 3" i	14' 3" i	14' 3" i	13' 4" i	13' 4" i	13' 4" i	11' 11" i	11' 11" i	11' 11" i
600S162-54	50	12	56' 6"	44' 10"	39' 2"	33' 11"	30' 7"	25' 10"	29' 5"	27' 10"	23' 5"	26' 3" i	25' 10"	21' 9"	24' 0" i	24' 0" i	20' 6"	22' 3" i	22' 3" i	19' 6"	20' 9" i	20' 9" i	18' 7"	18' 7" i	18' 7" i	17' 3" i
600S162-54	50	16	50' 11"	40' 9"	35' 7"	29' 5"	27' 10"	23' 5"	25' 5" i	25' 3" i	21' 4"	22' 9" i	22' 9" i	19' 9"	20' 9" i	20' 9" i	18' 7"	19' 3" i	19' 3" i	17' 8" i	18' 0" i	18' 0" i	16' 11" i	16' 1" i	16' 1" i	15' 8" i
600S162-54	50	24	41' 7"	35' 7"	31' 1"	24' 0" i	24' 0" i	20' 6"	20' 9" i	20' 9" i	18' 7"	18' 7" i	18' 7" i	17' 3" i	17' 0" i	17' 0" i	16' 3" i	15' 8" i	15' 8" i	15' 5" i	14' 8" i	14' 8" i	14' 8" i	13' 2" i	13' 2" i	13' 2" i
600S200-54	50	12	59' 5"	47' 2"	41' 2"	34' 11"	32' 2"	27' 2"	30' 3" i	29' 3"	24' 8"	27' 0" i	27' 0" i	22' 11"	24' 8" i	24' 8" i	21' 6"	22' 10" i	22' 10" i	20' 5"	21' 4" i	21' 4" i	19' 7" i	19' 1" i	19' 1" i	18' 2" i
600S200-54	50	16	52' 4"	42' 10"	37' 5"	30' 3" i	29' 3"	24' 8"	26' 2" i	26' 2" i	22' 5"	23' 5" i	23' 5" i	20' 9"	21' 4" i	21' 4" i	19' 7" i	19' 9" i	19' 9" i	18' 7" i	18' 6" i	18' 6" i	17' 9" i	16' 7" i	16' 7" i	16' 6" i
600S200-54	50	24	42' 9"	37' 5"	32' 8"	24' 8" i	24' 8" i	21' 6"	21' 4" i	21' 4" i	19' 7" i	19' 1" i	19' 1" i	18' 2" i	17' 5" i	17' 5" i	17' 1" i	16' 2" i	16' 2" i	16' 2" i	15' 1" i	15' 1" i	15' 1" i	13' 6" i	13' 6" i	13' 6" i
600S137-68	50	12	58' 0"	46' 1"	40' 3"	35' 10"	31' 5"	26' 6"	31' 0"	28' 7"	24' 1"	27' 9"	26' 6"	22' 4"	25' 4"	24' 11"	21' 0"	23' 6"	23' 6"	20' 0"	21' 11" i	21' 11" i	19' 1"	19' 8" i	19' 8" i	17' 9"
600S137-68	50	16	52' 9"	41' 10"	36' 7"	31' 0"	28' 7"	24' 1"	26' 11"	25' 11"	21' 11"	24' 0"	24' 0"	20' 4"	21' 11" i	21' 11" i	19' 1"	20' 4" i	20' 4" i	18' 2"	19' 0" i	19' 0" i	17' 4"	17' 0" i	17' 0" i	16' 1" i
600S137-68	50	24	43' 11"	36' 7"	31' 11"	25' 4"	24' 11"	21' 0"	21' 11" i	21' 11" i	19' 1"	19' 8" i	19' 8" i	17' 9"	17' 11" i	17' 11" i	16' 8"	16' 7" i	16' 7" i	15' 10" i	15' 6" i	15' 6" i	15' 2" i	13' 11" i	13' 11" i	13' 11" i
600S162-68	50	12	60' 7"	48' 1"	42' 0"	37' 7"	32' 10"	27' 8"	34' 2"	29' 10"	25' 2"	30' 10"	27' 8"	23' 4"	28' 2"	26' 1"	22' 0"	26' 1" i	24' 9"	20' 10"	24' 5" i	23' 8"	20' 0"	21' 10" i	21' 10" i	18' 6"
600S162-68	50	16	55' 1"	43' 8"	38' 2"	34' 2"	29' 10"	25' 2"	29' 10"	27' 1"	22' 10"	26' 9" i	25' 2"	21' 3"	24' 5" i	23' 8"	20' 0"	22' 7" i	22' 6" i	19' 0"	21' 1" i	21' 1" i	18' 2"	18' 11" i	18' 11" i	16' 10"
600S162-68	50	24	48' 1"	38' 2"	33' 4"	28' 2"	26' 1"	22' 0"	24' 5" i	23' 8"	20' 0"	21' 10" i	21' 10" i	18' 6"	19' 11" i	19' 11" i	17' 5"	18' 5" i	18' 5" i	16' 7" i	17' 3" i	17' 3" i	15' 10" i	15' 5" i	15' 5" i	14' 8" i
600S200-68	50	12	63' 9"	50' 7"	44' 2"	39' 6"	34' 6"	29' 1"	35' 11"	31' 4"	26' 5"	32' 6"	29' 1"	24' 7"	29' 8" i	27' 5"	23' 1"	27' 6" i	26' 0"	21' 11"	25' 9" i	24' 11" i	21' 0"	23' 0" i	23' 0" i	19' 6"
600S200-68	50	16	57' 11"	46' 0"	40' 2"	35' 11"	31' 4"	26' 5"	31' 6"	28' 6"	24' 0"	28' 2" i	26' 5"	22' 4"	25' 9" i	24' 11" i	21' 0"	23' 10" i	23' 8" i	19' 11"	22' 3" i	22' 3" i	19' 1"	19' 11" i	19' 11" i	17' 8" i
600S200-68	50	24	50' 7"	40' 2"	35' 1"	29' 8" i	27' 5"	23' 1"	25' 9" i	24' 11" i	21' 0"	23' 0" i	23' 0" i	19' 6"	21' 0" i	21' 0" i	18' 4"	19' 5" i	19' 5" i	17' 5" i	18' 2" i	18' 2" i	16' 8" i	16' 3" i	16' 3" i	15' 6" i

"a" web stiffeners required at ends and interior supports. "e" web stiffeners required at ends "i" web stiffeners required at interior support.

Limiting Wall Heights

See Wall Heights Table Notes on page 20.

Curtain Wall 2-span

Complies with 2009 & 2012 International Building Code (IBC)

Section	F_y	Spacing	5 psf			15 psf			20 psf			25 psf			30 psf			35 psf			40 psf			50 psf		
	(ksi)	(in) oc	L/120	L/240	L/360	L/240	L/360	L/600	L/240	L/360	L/600	L/240	L/360	L/600	L/240	L/360	L/600	L/240	L/360	L/600	L/240	L/360	L/600	L/240	L/360	L/600
600S137-97	50	12	64' 2"	50' 11"	44' 6"	39' 9"	34' 9"	29' 4"	36' 2"	31' 7"	26' 8"	33' 7"	29' 4"	24' 9"	31' 7"	27' 7"	23' 3"	30' 0"	26' 2"	22' 1"	28' 8"	25' 1"	21' 2"	25' 9"	23' 3"	19' 7"
600S137-97	50	16	58' 4"	46' 4"	40' 5"	36' 2"	31' 7"	26' 8"	32' 10"	28' 8"	24' 2"	30' 6"	26' 8"	22' 6"	28' 8"	25' 1"	21' 2"	26' 8"	23' 10"	20' 1"	24' 11"	22' 9"	19' 2"	22' 2" i	21' 2"	17' 10"
600S137-97	50	24	50' 11"	40' 5"	35' 4"	31' 7"	27' 7"	23' 3"	28' 8"	25' 1"	21' 2"	25' 9"	23' 3"	19' 7"	23' 5" i	21' 11"	18' 6"	21' 8" i	20' 10"	17' 7"	20' 2" i	19' 11"	16' 9"	18' 0" i	18' 0" i	15' 7"
600S162-97	50	12	67' 2"	53' 4"	46' 7"	41' 8"	36' 4"	30' 8"	37' 10"	33' 1"	27' 10"	35' 1"	30' 8"	25' 10"	33' 1"	28' 10"	24' 4"	31' 5"	27' 5"	23' 2"	30' 0"	26' 3"	22' 1"	27' 2"	24' 4"	20' 6"
600S162-97	50	16	61' 0"	48' 5"	42' 4"	37' 10"	33' 1"	27' 10"	34' 4"	30' 0"	25' 4"	31' 11"	27' 10"	23' 6"	30' 0"	26' 3"	22' 1"	28' 2"	24' 11"	21' 0"	26' 3" i	23' 10"	20' 1"	23' 5" i	22' 1"	18' 8"
600S162-97	50	24	53' 4"	42' 4"	37' 0"	33' 1"	28' 10"	24' 4"	30' 0"	26' 3"	22' 1"	27' 2"	24' 4"	20' 6"	24' 9" i	22' 11"	19' 4"	22' 10" i	21' 9"	18' 4"	21' 4" i	20' 10" i	17' 7"	18' 11" i	18' 11" i	16' 4"
600S200-97	50	12	70' 9"	56' 2"	49' 1"	43' 10"	38' 4"	32' 4"	39' 10"	34' 10"	29' 4"	37' 0"	32' 4"	27' 3"	34' 10"	30' 5"	25' 8"	33' 1"	28' 11"	24' 4"	31' 8"	27' 8"	23' 4"	28' 11" i	25' 8"	21' 8"
600S200-97	50	16	64' 4"	51' 0"	44' 7"	39' 10"	34' 10"	29' 4"	36' 3"	31' 8"	26' 8"	33' 7"	29' 4"	24' 9"	31' 8"	27' 8"	23' 4"	29' 11"	26' 3"	22' 2"	28' 0" i	25' 1"	21' 2"	24' 11" i	23' 4"	19' 8"
600S200-97	50	24	56' 2"	44' 7"	38' 11"	34' 10"	30' 5"	25' 8"	31' 8"	27' 8"	23' 4"	28' 11" i	25' 8"	21' 8"	26' 4" i	24' 2"	20' 4"	24' 4" i	22' 11"	19' 4"	22' 8" i	21' 11" i	18' 6"	20' 2" i	20' 2" i	17' 2"
600S162-118	50	12	70' 11"	56' 4"	49' 2"	44' 0"	38' 5"	32' 5"	39' 11"	34' 11"	29' 5"	37' 1"	32' 5"	27' 4"	34' 11"	30' 6"	25' 9"	33' 2"	29' 0"	24' 5"	31' 8"	27' 8"	23' 4"	29' 5"	25' 9"	21' 8"
600S162-118	50	16	64' 5"	51' 2"	44' 8"	39' 11"	34' 11"	29' 5"	36' 4"	31' 8"	26' 9"	33' 8"	29' 5"	24' 10"	31' 8"	27' 8"	23' 4"	30' 1"	26' 4"	22' 2"	28' 10"	25' 2"	21' 3"	25' 8"	23' 4"	19' 8"
600S162-118	50	24	56' 4"	44' 8"	39' 0"	34' 11"	30' 6"	25' 9"	31' 8"	27' 8"	23' 4"	29' 5"	25' 9"	21' 8"	27' 1"	24' 2"	20' 5"	25' 0"	23' 0"	19' 5"	23' 4"	22' 0"	18' 7"	20' 9" i	20' 5"	17' 3"
600S200-118	50	12	74' 10"	59' 5"	51' 11"	46' 5"	40' 6"	34' 2"	42' 2"	36' 10"	31' 1"	39' 2"	34' 2"	28' 10"	36' 10"	32' 2"	27' 2"	35' 0"	30' 7"	25' 9"	33' 5"	29' 3"	24' 8"	31' 1"	27' 2"	22' 11"
600S200-118	50	16	68' 0"	54' 0"	47' 2"	42' 2"	36' 10"	31' 1"	38' 4"	33' 5"	28' 3"	35' 7"	31' 1"	26' 2"	33' 5"	29' 3"	24' 8"	31' 9"	27' 9"	23' 5"	30' 5"	26' 7"	22' 5"	27' 3"	24' 8"	20' 10"
600S200-118	50	24	59' 5"	47' 2"	41' 2"	36' 10"	32' 2"	27' 2"	33' 5"	29' 3"	24' 8"	31' 1"	27' 2"	22' 11"	28' 10"	25' 6"	21' 6"	26' 7"	24' 3"	20' 5"	24' 9" i	23' 2"	19' 7"	22' 0" i	21' 6"	18' 2"
800S137-33	33	12	37' 10" a	37' 10" a	37' 10" a	21' 10" a	21' 10" a	21' 10" a	18' 10" a	18' 10" a	18' 10" a	16' 7" a	16' 7" a	16' 7" a	14' 10" a	14' 10" a	14' 10" a	13' 6" a	13' 6" a	13' 6" a	12' 5" a	12' 5" a	12' 5" a	10' 9" a	10' 9" a	10' 9" a
800S137-33	33	16	32' 9" a	32' 9" a	32' 9" a	18' 10" a	18' 10" a	18' 10" a	15' 11" a	15' 11" a	15' 11" a	13' 11" a	13' 11" a	13' 11" a	12' 5" a	12' 5" a	12' 5" a	11' 3" a	11' 3" a	11' 3" a	10' 4" a	10' 4" a	10' 4" a	8' 10" a	8' 10" a	8' 10" a
800S137-33	33	24	26' 9" a	26' 9" a	26' 9" a	14' 10" a	14' 10" a	14' 10" a	12' 5" a	12' 5" a	12' 5" a	10' 9" a	10' 9" a	10' 9" a	9' 6" a	9' 6" a	9' 6" a	8' 6" a	8' 6" a	8' 6" a	7' 9" a	7' 9" a	7' 9" a	6' 6" a	6' 6" a	6' 6" a
800S162-33	33	12	41' 0" a	41' 0" a	41' 0" a	23' 6" a	23' 6" a	23' 6" a	19' 11" a	19' 11" a	19' 11" a	17' 6" a	17' 6" a	17' 6" a	15' 8" a	15' 8" a	15' 8" a	14' 2" a	14' 2" a	14' 2" a	13' 0" a	13' 0" a	13' 0" a	11' 3" a	11' 3" a	11' 3" a
800S162-33	33	16	35' 6" a	35' 6" a	35' 6" a	19' 11" a	19' 11" a	19' 11" a	16' 10" a	16' 10" a	16' 10" a	14' 8" a	14' 8" a	14' 8" a	13' 0" a	13' 0" a	13' 0" a	11' 9" a	11' 9" a	11' 9" a	10' 9" a	10' 9" a	10' 9" a	9' 2" a	9' 2" a	9' 2" a
800S162-33	33	24	29' 0" a	29' 0" a	29' 0" a	15' 8" a	15' 8" a	15' 8" a	13' 0" a	13' 0" a	13' 0" a	11' 3" a	11' 3" a	11' 3" a	9' 10" a	9' 10" a	9' 10" a	8' 10" a	8' 10" a	8' 10" a	8' 0" a	8' 0" a	8' 0" a	6' 8" a	6' 8" a	6' 8" a
800S200-33	33	12	44' 0" a	44' 0" a	44' 0" a	25' 0" a	25' 0" a	25' 0" a	21' 1" a	21' 1" a	21' 1" a	18' 6" a	18' 6" a	18' 6" a	16' 6" a	16' 6" a	16' 6" a	14' 11" a	14' 11" a	14' 11" a	13' 8" a	13' 8" a	13' 8" a	11' 8" a	11' 8" a	11' 8" a
800S200-33	33	16	38' 1" a	38' 1" a	38' 1" a	21' 1" a	21' 1" a	21' 1" a	17' 9" a	17' 9" a	17' 9" a	15' 5" a	15' 5" a	15' 5" a	13' 8" a	13' 8" a	13' 8" a	12' 3" a	12' 3" a	12' 3" a	11' 2" a	11' 2" a	11' 2" a	9' 6" a	9' 6" a	9' 6" a
800S200-33	33	24	31' 1" a	31' 1" a	31' 1" a	16' 6" a	16' 6" a	16' 6" a	13' 8" a	13' 8" a	13' 8" a	11' 8" a	11' 8" a	11' 8" a	10' 3" a	10' 3" a	10' 3" a	9' 1" a	9' 1" a	9' 1" a	8' 2" a	8' 2" a	8' 2" a	6' 10" a	6' 10" a	6' 10" a
800S137-43	33	12	45' 10"	45' 10"	44' 0"	26' 6" i	26' 6" i	26' 6" i	22' 11" i	22' 11" i	22' 11" i	20' 6" i	20' 6" i	20' 6" i	18' 9" i	18' 9" i	18' 9" i	17' 4" i	17' 4" i	17' 4" i	16' 3" i	16' 3" i	16' 3" i	14' 6" a	14' 6" a	14' 6" a
800S137-43	33	16	39' 9" i	39' 9" i	39' 9" i	22' 11" i	22' 11" i	22' 11" i	19' 10" i	19' 10" i	19' 10" i	17' 9" i	17' 9" i	17' 9" i	16' 3" i	16' 3" i	16' 3" i	15' 0" a	15' 0" a	15' 0" a	14' 1" a	14' 1" a	14' 1" a	12' 5" a	12' 5" a	12' 5" a
800S137-43	33	24	32' 5" i	32' 5" i	32' 5" i	18' 9" i	18' 9" i	18' 9" i	16' 3" i	16' 3" i	16' 3" i	14' 6" a	14' 6" a	14' 6" a	13' 2" a	13' 2" a	13' 2" a	12' 1" a	12' 1" a	12' 1" a	11' 2" a	11' 2" a	11' 2" a	9' 10" a	9' 10" a	9' 10" a
800S162-43	33	12	49' 5" i	49' 5" i	45' 10"	28' 6" i	28' 6" i	28' 6" i	24' 9" i	24' 9" i	24' 9" i	22' 1" i	22' 1" i	22' 1" i	20' 2" i	20' 2" i	20' 2" i	18' 8" i	18' 8" i	18' 8" i	17' 6" a	17' 6" a	17' 6" a	15' 5" a	15' 5" a	15' 5" a
800S162-43	33	16	42' 10" i	42' 10" i	41' 7" i	24' 9" i	24' 9" i	24' 9" i	21' 5" i	21' 5" i	21' 5" i	19' 2" i	19' 2" i	19' 2" i	17' 6" a	17' 6" a	17' 6" a	16' 1" a	16' 1" a	16' 1" a	14' 11" a	14' 11" a	14' 11" a	13' 1" a	13' 1" a	13' 1" a
800S162-43	33	24	34' 11" i	34' 11" i	34' 11" i	20' 2" i	20' 2" i	20' 2" i	17' 6" a	17' 6" a	17' 6" a	15' 5" a	15' 5" a	15' 5" a	13' 11" a	13' 11" a	13' 11" a	12' 9" a	12' 9" a	12' 9" a	11' 9" a	11' 9" a	11' 9" a	10' 4" a	10' 4" a	10' 4" a
800S200-43	33	12	52' 11"	52' 11"	48' 2"	30' 6" i	30' 6" i	30' 6" i	26' 5" i	26' 5" i	26' 5" i	23' 8" i	23' 8" i	23' 8" i	21' 7" i	21' 7" i	21' 7" i	20' 0" a	20' 0" a	20' 0" a	18' 8" a	18' 8" a	18' 8" a	16' 9" a	16' 9" a	16' 9" a
800S200-43	33	16	45' 10" i	45' 10" i	43' 9"	26' 5" i	26' 5" i	26' 5" i	22' 11" i	22' 11" i	22' 11" i	20' 6" a	20' 6" a	20' 6" a	18' 8" a	18' 8" a	18' 8" a	17' 4" a	17' 4" a	17' 4" a	16' 2" a	16' 2" a	16' 2" a	14' 6" a	14' 6" a	14' 6" a
800S200-43	33	24	37' 5" i	37' 5" i	37' 5" i	21' 7" i	21' 7" i	21' 7" i	18' 8" a	18' 8" a	18' 8" a	16' 9" a	16' 9" a	16' 9" a	15' 3" a	15' 3" a	15' 3" a	14' 1" a	14' 1" a	14' 1" a	12' 11" a	12' 11" a	12' 11" a	11' 3" a	11' 3" a	11' 3" a
800S137-54	50	12	61' 7"	54' 5"	47' 7"	35' 7"	35' 7"	31' 4"	30' 10" i	30' 10" i	28' 6"	27' 7" i	27' 7" i	26' 5"	25' 2" i	25' 2" i	24' 10" i	23' 3" i	23' 3" i	23' 3" i	21' 9" i	21' 9" i	21' 9" i	19' 6" i	19' 6" i	19' 6" i
800S137-54	50	16	53' 4"	49' 4"	43' 3"	30' 10" i	30' 10" i	28' 6"	26' 8" i	26' 8" i	25' 10" i	23' 10" i	23' 10" i	23' 10" i	21' 9" i	21' 9" i	21' 9" i	20' 2" i	20' 2" i	20' 2" i	18' 10" i	18' 10" i	18' 10" i	16' 10" i	16' 10" i	16' 10" i
800S137-54	50	24	43' 7"	43' 0"	37' 9"	25' 2" i	25' 2" i	24' 10" i	21' 9" i	21' 9" i	21' 9" i	19' 6" i	19' 6" i	19' 6" i	17' 9" i	17' 9" i	17' 9" i	16' 6" i	16' 6" i	16' 6" i	15' 5" i	15' 5" i	15' 5" i	13' 9" i	13' 9" i	13' 9" i
800S162-54	50	12	66' 2"	56' 7"	49' 5"	38' 2"	38' 2"	32' 7"	33' 1" i	33' 1" i	29' 7"	29' 7" i	29' 7" i	27' 6"	27' 0" i	27' 0" i	25' 10" i	25' 0" i	25' 0" i	24' 7" i	23' 5" i	23' 5" i	23' 5" i	20' 11" i	20' 11" i	20' 11" i
800S162-54	50	16	57' 3"	51' 4"	44' 11"	33' 1" i	33' 1" i	29' 7"	28' 8" i	28' 8" i	26' 10" i	25' 7" i	25' 7" i	24' 11" i	23' 5" i	23' 5" i	23' 5" i	21' 8" i	21' 8" i	21' 8" i	20' 3" i	20' 3" i	20' 3" i	18' 1" i	18' 1" i	18' 1" i
800S162-54	50	24	46' 9"	44' 9"	39' 3"	27' 0" i	27' 0" i	25' 10" i	23' 5" i	23' 5" i	23' 5" i	20' 11" i	20' 11" i	20' 11" i	19' 1" i	19' 1" i	19' 1" i	17' 8" i	17' 8" i	17' 8" i	16' 6" i	16' 6" i	16' 6" i	14' 9" i	14' 9" i	14' 9" i
800S200-54	50	12	70' 7"	59' 3"	51' 9"	40' 9"	40' 5"	34' 1"	35' 4" i	35' 4" i	30' 11"	31' 7" i	31' 7" i	28' 9"	28' 10" i	28' 10" i	27' 0" i	26' 8" i	26' 8" i	25' 8" i	24' 11" i	24' 11" i	24' 7" i	22' 4" i	22' 4" i	22' 4" i
800S200-54	50	16	61' 2"	53' 10"	47' 0"	35' 4" i	35' 4" i	30' 11"	30' 7" i	30' 7" i	28' 1"	27' 4" i	27' 4" i	26' 1" i	24' 11" i	24' 11" i	24' 7" i	23' 1" i	23' 1" i	23' 1" i	21' 7" i	21' 7" i	21' 7" i	19' 4" i	19' 4" i	19' 4" i
800S200-54	50	24	49' 11"	47' 0"	41' 1"	28' 10" i	28' 10" i	27' 0" i	24' 11" i	24' 11" i	24' 7" i	22' 4" i	22' 4" i	22' 4" i	20' 5" i	20' 5" i	20' 5" i	18' 10" i	18' 10" i	18' 10" i	17' 8" i	17' 8" i	17' 8" i	15' 9" a	15' 9" a	15' 9" a
800S137-68	50	12	72' 8"	58' 5"	51' 0"	41' 11"	39' 10"	33' 7"	36' 4"	36' 2"	30' 6"	32' 6"	32' 6"	28' 4"	29' 8" i	29' 8" i	26' 8"	27' 5" i	27' 5" i	25' 4"	25' 8" i	25' 8" i	24' 3"	23' 0" i	23' 0" i	22' 6" i
800S137-68	50	16	62' 11"	53' 1"	46' 4"	36' 4"	36' 2"	30' 6"	31' 5"	31' 5"	27' 9"	28' 2" i	28' 2" i	25' 9"	25' 8" i	25' 8" i	24' 3"	23' 9" i	23' 9" i	23' 0" i	22' 3" i	22' 3" i	22' 0" i	19' 11" i	19' 11" i	19' 11" i
800S137-68	50	24	51' 4"	46' 4"	40' 6"	29' 8" i	29' 8" i	26' 8"	25' 8" i	25' 8" i	24' 3"	23' 0" i	23' 0" i	22' 6" i	21' 0" i	21' 0" i	21' 0" i	19' 5" i	19' 5" i	19' 5" i	18' 2" i	18' 2" i	18' 2" i	16' 3" i	16' 3" i	16' 3" i
800S162-68	50	12	76' 6"	60' 9"	53' 1"	44' 9"	41' 5"	34' 11"	38' 9"	37' 8"	31' 9"	34' 8"	34' 8"	29' 6"	31' 8" i	31' 8" i	27' 9"	29' 4" i	29' 4" i	26' 4"	27' 5" i	27' 5" i	25' 2"	24' 6" i	24' 6" i	23' 5" i
800S162-68	50	16	67' 2"	55' 2"	48' 2"	38' 9"	37' 8"	31' 9"	33' 7" i	33' 7" i	28' 10"	30' 0" i	30' 0" i	26' 9"	27' 5" i	27' 5" i	25' 2"	25' 5" i	25' 5" i	23' 11" i	23' 9" i	23' 9" i	22' 11" i	21' 3" i	21' 3" i	21' 3" i
800S162-68	50	24	54' 10"	48' 2"	42' 1"	31' 8" i	31' 8" i	27' 9"	27' 5" i	27' 5" i	25' 2"	24' 6" i	24' 6" i	23' 5" i	22' 5" i	22' 5" i	22' 0" i	20' 9" i	20' 9" i	20' 9" i	19' 5" i	19' 5" i	19' 5" i	17' 4" i	17' 4" i	17' 4" i
800S200-68	50	12	80' 1"	63' 7"	55' 7"	49' 4"	43' 5"	36' 7"	42' 8"	39' 5"	33' 3"	38' 2"	36' 7"	30' 10"	34' 10" i	34' 5" i	29' 0"	32' 3" i	32' 3" i	27' 7"	30' 2" i	30' 2" i	26' 5"	27' 0" i	27' 0" i	24' 6" i
800S200-68	50	16	72' 9"	57' 9"	50' 6"	42' 8"	39' 5"	33' 3"	37' 0" i	35' 10"	30' 2"	33' 1" i	33' 1" i	28' 0"	30' 2" i	30' 2" i	26' 5"	27' 11" i	27' 11" i	25' 1"	26' 2" i	26' 2" i	24' 0" i	23' 5" i	23' 5" i	22' 3" i
800S200-68	50	24	60' 5"	50' 6"	44' 1"	34' 10" i	34' 5" i	29' 0"	30' 2" i	30' 2" i	26' 5"	27' 0" i	27' 0" i	24' 6" i	24' 8" i	24' 8" i	23' 1" i	22' 10" i	22' 10" i	21' 11" i	21' 4" i	21' 4" i	20' 11" i	19' 1" i	19' 1" i	19' 1" i
800S137-97	50	12	81' 7"	64' 9"	56' 7"	50' 7"	44' 2"	37' 3"	45' 11"	40' 2"	33' 10"	41' 3"	37' 3"	31' 5"	37' 8"	35' 1"	29' 7"	34' 10"	33' 4"	28' 1"	32' 7"	31' 10"	26' 10"	29' 1" i	29' 1" i	24' 11"
800S137-97	50	16	74' 2"	58' 10"	51' 5"	45' 11"	40' 2"	33' 10"	40' 0"	36' 6"	30' 9"	35' 9"	33' 10"	28' 7"	32' 7"	31' 10"	26' 10"	30' 2"	30' 2"	25' 6"	28' 2" i	28' 2" i	24' 5"	25' 2" i	25' 2" i	22' 8"
800S137-97	50	24	64' 9"	51' 5"	44' 11"	37' 8"	35' 1"	29' 7"	32' 7"	31' 10"	26' 10"	29' 1" i	29' 1" i	24' 11"	26' 7" i	26' 7" i	23' 6"	24' 7" i	24' 7" i	22' 4"	22' 11" i	22' 11" i	21' 4"	20' 6" i	20' 6" i	19' 10" i
800S162-97	50	12	85' 0"	67' 5"	58' 11"	52' 8"	46' 0"	38' 10"	47' 10"	41' 10"	35' 3"	43' 10"	38' 10"	32' 9"	40' 0"	36' 6"	30' 10"	37' 0"	34' 8"	29' 3"	34' 7"	33' 2"	28' 0"	30' 11" i	30' 10" i	26' 0"
800S162-97	50	16	77' 2"	61' 3"	53' 6"	47' 10"	41' 10"	35' 3"	42' 5"	38' 0"	32' 0"	37' 11"	35' 3"	29' 9"	34' 7"	33' 2"	28' 0"	32' 0" i	31' 6"	26' 7"	29' 11" i	29' 11" i	25' 5"	26' 9" i	26' 9" i	23' 7"
800S162-97	50	24	67' 5"	53' 6"	46' 9"	40' 0"	36' 6"	30' 10"	34' 7"	33' 2"	28' 0"	30' 11" i	30' 10" i	26' 0"	28' 2" i	28' 2" i	24' 5"	26' 1" i	26' 1" i	23' 3"	24' 4" i	24' 4" i	22' 3"	21' 9" i	21' 9" i	20' 7" i
800S200-97	50	12	89' 1"	70' 9"	61' 9"	55' 3"	48' 3"	40' 8"	50' 2"	43' 10"	37' 0"	46' 7"	40' 8"	34' 4"	43' 10"	38' 4"	32' 4"	41' 4"	36' 5"	30' 8"	38' 8"	34' 10"	29' 4"	34' 7" i	32' 4"	27' 3"
800S200-97	50	16	81' 0"	64' 3"	56' 2"	50' 2"	43' 10"	37' 0"	45' 7"	39' 10"	33' 7"	42' 4"	37' 0"	31' 2"	38' 8"	34' 10"	29' 4"	35' 10" i	33' 1"	27' 11"	33' 6" i	31' 7"	26' 8"	30' 0" i	29' 4" i	24' 9"
800S200-97	50	24	70' 9"	56' 2"	49' 0"	43' 10"	38' 4"	32' 4"	38' 8"	34' 10"	29' 4"	34' 7" i	32' 4"	27' 3"	31' 7" i	30' 5" i	25' 8"	29' 3" i	28' 10" i	24' 4"	27' 4" i	27' 4" i	23' 4"	24' 6" i	24' 6" i	21' 7"
800S162-118	50	12	89' 11"	71' 4"	62' 4"	55' 9"	48' 8"	41' 1"	50' 8"	44' 3"	37' 4"	47' 0"	41' 1"	34' 8"	44' 3"	38' 8"	32' 7"	42' 0"	36' 8"	30' 11"	40' 2"	35' 1"	29' 7"	37' 2"	32' 7"	27' 6"
800S162-118	50	16	81' 8"	64' 10"	56' 8"	50' 8"	44' 3"	37' 4"	46' 0"	40' 2"	33' 11"	42' 8"	37' 4"	31' 6"	40' 2"	35' 1"	29' 7"	38' 2"	33' 4"	28' 1"	36' 0"	31' 11"	26' 11"	32' 2" i	29' 7"	25' 0"
800S162-118	50	24	71' 4"	56' 8"	49' 6"	44' 3"	38' 8"	32' 7"	40' 2"	35' 1"	29' 7"	37' 2"	32' 7"	27' 6"	33' 11" i	30' 8"	25' 10"	31' 4" i	29' 2"	24' 7"	29' 4" i	27' 10"	23' 6"	26' 2" i	25' 10" i	21' 10"
800S200-118	50	12	94' 5"	74' 11"	65' 5"	58' 6"	51' 1"	43' 1"	53' 2"	46' 5"	39' 2"	49' 4"	43' 1"	36' 4"	46' 5"	40' 7"	34' 3"	44' 1"	38' 6"	32' 6"	42' 2"	36' 10"	31' 1"	39' 2"	34' 3"	28' 10"
800S200-118	50	16	85' 9"	68' 1"	59' 6"	53' 2"	46' 5"	39' 2"	48' 4"	42' 2"	35' 7"	44' 10"	39' 2"	33' 0"	42' 2"	36' 10"	31' 1"	40' 1"	35' 0"	29' 6"	38' 1" i	33' 6"	28' 3"	34' 0" i	31' 1"	26' 3"
800S200-118	50	24	74' 11"	59' 6"	51' 11"	46' 5"	40' 7"	34' 3"	42' 2"	36' 10"	31' 1"	39' 2"	34' 3"	28' 10"	35' 10" i	32' 2"	27' 2"	33' 2" i	30' 7"	25' 10"	31' 0" i	29' 3"	24' 8"	27' 7" i	27' 2" i	22' 11"

"a" web stiffeners required at ends and interior supports. "e" web stiffeners required at ends "i" web stiffeners required at interior support.

Combined Loading Allowable Axial Load Table Notes

1. Allowable axial loads listed in kips (1 kip = 1000 pounds).
2. Allowable axial loads listed are based on simple one span condition.
3. Allowable axial loads determined in accordance with section C5 of AISI S100 and with the assumption that axial load passes through centroid of the effective section.
4. Allowable axial loads are based on 4'-0" on center bracing.
5. Studs are assumed to be adequately braced at a maximum spacing of L_u to develop full allowable moment, M_a.
6. Listed wind pressures represent 1.0 W calculated based on 2009 IBC or 0.6 W calculated based on 2012 IBC. For deflection calculations, listed wind pressures, have been reduced by 0.70 as allowed by IBC. The 5 psf pressure has not been reduced for deflection checks.
7. End supports have not been checked for web crippling. See page 47 for web crippling values.
8. See page 2 for additional table notes.

5 psf Lateral Load (Interior Walls Only)

Wall	Spacing	350S162-(mils)				362S137-(mils)				362S162-(mils)				362S200-(mils)				400S137-(mils)				400S162-(mils)			
Height	(in)	33 ksi		50 ksi		33 ksi		50 ksi		33 ksi		50 ksi		33 ksi		50 ksi		33 ksi		50 ksi		33 ksi		50 ksi	
(ft)	o.c.	(33)	(43)	(54)	(68)	(33)	(43)	(54)	(68)	(33)	(43)	(54)	(68)	(33)	(43)	(54)	(68)	(33)	(43)	(54)	(68)	(33)	(43)	(54)	(68)
8	12	1.81	2.56	3.97	5.08	1.49	2.14	3.32	4.37	1.87	2.65	4.15	5.38	2.25	3.28	5.18	6.68	1.61	2.31	3.67	4.98	2.03	2.87	4.62	6.18
	16	1.74	2.48	3.90	5.01	1.42	2.07	3.26	4.30	1.80	2.57	4.08	5.31	2.17	3.20	5.10	6.60	1.55	2.25	3.61	4.91	1.96	2.80	4.55	6.11
	24	1.58	2.32	3.76	4.87	1.29	1.93	3.13	4.17	1.65	2.42	3.94	5.17	2.01	3.03	4.94	6.45	1.42	2.12	3.49	4.78	1.82	2.66	4.42	5.97
9	12	1.67	2.38	3.65	4.67	1.38	2.01	3.11	4.07	1.74	2.48	3.86	4.99	2.10	3.07	4.79	6.17	1.52	2.20	3.49	4.79	1.91	2.72	4.37	5.85
	16	1.57	2.28	3.56	4.58	1.30	1.92	3.02	3.99	1.64	2.38	3.77	4.90	2.00	2.96	4.69	6.07	1.44	2.12	3.42	4.70	1.82	2.63	4.28	5.76
	24	1.39	2.09	3.39	4.41	1.13	1.74	2.87	3.82	1.46	2.19	3.60	4.72	1.80	2.76	4.49	5.88	1.28	1.95	3.27	4.54	1.65	2.46	4.11	5.59
10	12	1.51	2.18	3.29	4.23	1.26	1.85	2.85	3.73	1.58	2.29	3.53	4.55	1.93	2.84	4.37	5.61	1.41	2.07	3.28	4.49	1.77	2.56	4.08	5.47
	16	1.40	2.07	3.19	4.12	1.16	1.75	2.75	3.63	1.47	2.17	3.42	4.44	1.81	2.71	4.25	5.49	1.31	1.97	3.19	4.38	1.67	2.45	3.97	5.36
	24	1.19	1.84	2.99	3.92	0.96	1.54	2.57	3.44	1.26	1.95	3.22	4.23	1.57	2.47	4.01	5.27	1.12	1.77	3.00	4.18	1.46	2.23	3.77	5.14
12	12	1.18	1.75	2.56	3.31	0.99	1.51	2.27	2.97	1.25	1.87	2.79	3.60	1.56	2.32	3.45	4.44	1.16	1.76	2.77	3.75	1.46	2.17	3.41	4.54
	16	1.04[7]	1.61	2.44	3.18	0.86[7]	1.37	2.15	2.85	1.11	1.72	2.66	3.47	1.40	2.16	3.30	4.30	1.03	1.62	2.64	3.61	1.32	2.02	3.27	4.39
	24	0.79[6]	1.34[6]	2.21	2.94	0.63[6]	1.12[6]	1.93[7]	2.62	0.86[6]	1.44[7]	2.42	3.22	1.12[6]	1.86	3.03	4.03	0.80[6]	1.36[7]	2.40	3.35	1.06[7]	1.74	3.01	4.12
14	12	0.86[6]	1.33	1.95	2.54	0.72[6]	1.15[7]	1.75	2.30	0.93[7]	1.44	2.14	2.78	1.18	1.81	2.64	3.43	0.90[7]	1.41	2.22	2.96	1.14	1.75	2.71	3.57
	16	0.71[6]	1.17[6]	1.82[7]	2.40	0.59[6]	1.00[6]	1.62[7]	2.16	0.78[6]	1.28[7]	2.00	2.64	1.01[6]	1.63[7]	2.48	3.27	0.75[6]	1.25[7]	2.08	2.80	0.98[6]	1.58	2.55	3.41
	24	0.46[3]	0.89[6]	1.58[6]	2.16[6]	0.34[3]	0.73[3]	1.39[6]	1.92[6]	0.52[3]	0.99[6]	1.75[6]	2.38[7]	0.70[6]	1.31[6]	2.19[6]	2.99	0.49[3]	0.96[6]	1.81[6]	2.52[7]	0.70[6]	1.26[6]	2.27[7]	3.10
16	12	0.59[6]	0.96[6]	1.48[7]	1.95	0.50[6]	0.83[6]	1.33[6]	1.76[7]	0.65[6]	1.06[6]	1.63[7]	2.14	0.84[6]	1.36[7]	2.01	2.66	0.65[6]	1.08[6]	1.74	2.30	0.84[6]	1.35[7]	2.12	2.78
	16	0.45[3]	0.80[6]	1.35[6]	1.81[6]	0.36[3]	0.68[3]	1.20[6]	1.63[6]	0.51[3]	0.90[6]	1.49[6]	2.00[7]	0.67[6]	1.18[6]	1.86[6]	2.50	0.50[3]	0.91[6]	1.59[6]	2.14[7]	0.68[6]	1.17[6]	1.96[7]	2.61
	24	0.21[2]	0.54[3]	1.12[3]	1.57[6]	0.12[2]	0.42[2]	0.97[3]	1.39[3]	0.25[2]	0.62[3]	1.25[3]	1.74[6]	0.38[3]	0.86[3]	1.58[6]	2.21[6]	0.23[2]	0.61[3]	1.32[6]	1.86[6]	0.39[3]	0.85[3]	1.67[6]	2.31[6]

5 psf Lateral Load (Interior Walls Only)

Wall	Spacing	400S200-(mils)				550S162-(mils)				600S137-(mils)					600S162-(mils)					600S200-(mils)				
Height	(in)	33 ksi		50 ksi		33 ksi		50 ksi		33 ksi		50 ksi			33 ksi		50 ksi			33 ksi		50 ksi		
(ft)	o.c.	(33)	(43)	(54)	(68)	(33)	(43)	(54)	(68)	(33)	(43)	(54)	(68)	(97)	(33)	(43)	(54)	(68)	(97)	(33)	(43)	(54)	(68)	(97)
8	12	2.42	3.55	5.77	7.63	2.39	3.38	5.63	7.45	1.77	2.51	3.81	5.05	7.54	2.42	3.40	5.61	7.45	11.39	2.86	4.31	7.46	9.97	15.65
	16	2.34	3.48	5.70	7.56	2.34	3.33	5.58	7.41	1.73	2.47	3.78	5.02	7.52	2.37	3.35	5.57	7.41	11.35	2.81	4.26	7.41	9.93	15.60
	24	2.19	3.32	5.54	7.41	2.24	3.23	5.49	7.32	1.65	2.39	3.72	4.96	7.46	2.28	3.27	5.49	7.33	11.28	2.72	4.16	7.31	9.83	15.51
9	12	2.28	3.37	5.43	7.19	2.32	3.31	5.55	7.41	1.74	2.47	3.78	5.02	7.52	2.38	3.36	5.57	7.41	11.35	2.80	4.23	7.31	9.79	15.39
	16	2.19	3.27	5.33	7.10	2.26	3.24	5.49	7.35	1.69	2.43	3.74	4.98	7.48	2.32	3.30	5.52	7.36	11.31	2.74	4.16	7.25	9.73	15.33
	24	2.00	3.08	5.14	6.91	2.13	3.12	5.38	7.24	1.59	2.33	3.66	4.90	7.41	2.20	3.19	5.42	7.26	11.21	2.62	4.03	7.12	9.61	15.20
10	12	2.13	3.16	5.04	6.70	2.25	3.22	5.41	7.35	1.70	2.44	3.75	4.99	7.49	2.33	3.31	5.53	7.37	11.31	2.73	4.13	7.14	9.58	15.07
	16	2.01	3.04	4.92	6.58	2.16	3.14	5.34	7.27	1.63	2.37	3.70	4.94	7.44	2.25	3.24	5.46	7.30	11.25	2.65	4.05	7.05	9.50	14.99
	24	1.79	2.81	4.69	6.34	2.00	2.99	5.19	7.12	1.51	2.25	3.59	4.83	7.36	2.10	3.11	5.33	7.17	11.12	2.50	3.88	6.89	9.35	14.83
12	12	1.79	2.69	4.19	5.57	2.05	3.00	5.04	6.87	1.60	2.34	3.66	4.90	7.41	2.17	3.15	5.35	7.25	11.19	2.55	3.88	6.67	9.00	14.21
	16	1.63	2.53	4.03	5.41	1.93	2.89	4.93	6.76	1.51	2.25	3.59	4.82	7.34	2.06	3.05	5.25	7.15	11.09	2.44	3.76	6.55	8.89	14.09
	24	1.35	2.22	3.74	5.11	1.71	2.68	4.71	6.54	1.33	2.07	3.43	4.67	7.21	1.85	2.85	5.05	6.95	10.89	2.22	3.53	6.31	8.66	13.85
14	12	1.43	2.19	3.32	4.39	1.81	2.72	4.54	6.23	1.48	2.22	3.55	4.79	7.31	1.95	2.91	4.93	6.77	10.96	2.32	3.56	6.07	8.26	13.08
	16	1.25[7]	2.00	3.14	4.21	1.66	2.57	4.39	6.07	1.36	2.09	3.44	4.67	7.20	1.81	2.78	4.80	6.63	10.80	2.17	3.40	5.91	8.10	12.91
	24	0.92[6]	1.65[7]	2.82	3.88	1.37	2.29	4.11	5.78	1.11	1.85	3.21	4.45	7.00	1.54	2.51	4.53	6.35	10.49	1.89	3.09	5.59	7.79	12.58
16	12	1.07[7]	1.71	2.60	3.42	1.53	2.39	3.95	5.45	1.34	2.07	3.40	4.63	7.15	1.71	2.62	4.41	6.10	9.89	2.05	3.18	5.38	7.38	11.74
	16	0.89[6]	1.51[7]	2.41	3.24	1.35	2.20	3.77	5.26	1.18	1.90	3.24	4.46	7.00	1.53	2.45	4.24	5.91	9.68	1.87	2.98	5.18	7.17	11.52
	24	0.56[3]	1.16[6]	2.09[6]	2.91[7]	1.02[6]	1.87	3.43	4.90	0.87[6]	1.59	2.95	4.16	6.71	1.20[7]	2.12	3.91	5.57	9.28	1.52	2.61	4.79	6.79	11.09

5 psf Lateral Load (Interior Walls Only)

Wall	Spacing	800S137-(mils)					800S162-(mils)						800S200-(mils)					
Height	(in)	33 ksi		50 ksi			33 ksi		50 ksi				33 ksi		50 ksi			
(ft)	o.c.	(33)	(43)	(54)	(68)	(97)	(33)	(43)	(54)	(68)	(97)	(118)	(33)	(43)	(54)	(68)	(97)	(118)
8	12	1.71	2.43	3.57	4.74	7.21	2.39	3.35	5.43	7.25	11.25	14.30	2.97	4.47	7.74	10.29	15.98	20.46
	16	1.68	2.40	3.55	4.72	7.19	2.36	3.32	5.40	7.22	11.23	14.28	2.93	4.44	7.71	10.25	15.95	20.43
	24	1.63	2.35	3.50	4.68	7.16	2.29	3.26	5.35	7.16	11.17	14.23	2.86	4.36	7.64	10.19	15.88	20.37
9	12	1.69	2.40	3.55	4.73	7.20	2.37	3.33	5.41	7.22	11.23	14.28	2.94	4.44	7.71	10.26	15.95	20.43
	16	1.65	2.37	3.52	4.70	7.17	2.32	3.29	5.37	7.19	11.20	14.25	2.89	4.39	7.67	10.21	15.91	20.39
	24	1.58	2.30	3.47	4.65	7.12	2.24	3.21	5.30	7.12	11.13	14.19	2.80	4.30	7.57	10.13	15.83	20.31
10	12	1.66	2.38	3.53	4.71	7.18	2.33	3.30	5.38	7.19	11.20	14.26	2.90	4.41	7.68	10.22	15.92	20.40
	16	1.62	2.34	3.49	4.67	7.15	2.28	3.25	5.33	7.15	11.16	14.22	2.85	4.35	7.62	10.17	15.87	20.35
	24	1.53	2.26	3.43	4.61	7.09	2.18	3.15	5.24	7.06	11.07	14.14	2.73	4.23	7.50	10.06	15.76	20.25
12	12	1.60	2.32	3.48	4.66	7.13	2.26	3.22	5.31	7.13	11.14	14.20	2.82	4.32	7.59	10.14	15.84	20.32
	16	1.54	2.26	3.43	4.61	7.09	2.18	3.15	5.24	7.06	11.07	14.14	2.74	4.23	7.50	10.06	15.76	20.24
	24	1.41	2.14	3.33	4.51	7.00	2.03	3.00	5.11	6.93	10.94	14.03	2.57	4.06	7.32	9.90	15.60	20.08
14	12	1.53	2.25	3.42	4.60	7.08	2.17	3.13	5.22	7.04	11.05	14.12	2.69	4.16	7.36	9.96	15.72	20.20
	16	1.44	2.16	3.35	4.53	7.01	2.06	3.03	5.13	6.94	10.95	14.03	2.58	4.04	7.24	9.84	15.61	20.09
	24	1.27	2.00	3.21	4.40	6.88	1.85	2.83	4.94	6.76	10.76	13.87	2.35	3.80	6.99	9.61	15.38	19.86
16	12	1.44	2.16	3.34	4.52	7.00	2.06	3.02	5.11	6.93	10.93	14.01	2.52	3.93	6.95	9.45	15.15	19.78
	16	1.32	2.05	3.25	4.43	6.91	1.92	2.89	4.98	6.80	10.80	13.89	2.37	3.77	6.78	9.30	15.00	19.62
	24	1.10	1.83	3.06	4.25	6.74	1.64	2.62	4.72	6.54	10.53	13.66	2.09	3.46	6.46	9.00	14.68	19.29

[1] Deflection exceeds L/120
[2] Deflection exceeds L/240
[3] Deflection exceeds L/360
[6] Deflection exceeds L/600
[7] Deflection exceeds L/720
– If not noted, deflection is less than L/720.

See Combined Axial and Lateral Load Table Notes on page 23.

Complies with 2009 & 2012 International Building Code (IBC)

15 psf Lateral Load

Wall	Spacing	350S162-(mils)				362S137-(mils)				362S162-(mils)				362S200-(mils)				400S137-(mils)				400S162-(mils)				400S200-(mils)				550S162-(mils)			
Height	(in)	33 ksi		50 ksi		33 ksi		50 ksi		33 ksi		50 ksi		33 ksi		50 ksi		33 ksi		50 ksi		33 ksi		50 ksi		33 ksi		50 ksi		33 ksi		50 ksi	
(ft)	o.c.	(33)	(43)	(54)	(68)	(33)	(43)	(54)	(68)	(33)	(43)	(54)	(68)	(33)	(43)	(54)	(68)	(33)	(43)	(54)	(68)	(33)	(43)	(54)	(68)	(33)	(43)	(54)	(68)	(33)	(43)	(54)	(68)
8	12	1.37	2.10	3.56	4.66	1.09	1.72	2.95	3.98	1.44	2.20	3.74	4.96	1.77	2.79	4.71	6.22	1.24	1.92	3.32	4.60	1.62	2.45	4.22	5.77	1.97	3.10	5.32	7.19	2.08	3.09	5.36	7.19
	16	1.16	1.89	3.36	4.46	0.91	1.53	2.77	3.80	1.23	1.99	3.55	4.76	1.55	2.56	4.49	6.01	1.06	1.74	3.14	4.41	1.42	2.25	4.04	5.57	1.76	2.88	5.10	6.97	1.93	2.95	5.22	7.06
	24	0.78	1.49	2.99	4.08	0.56[7]	1.16	2.43	3.44	0.85	1.59	3.17	4.38	1.13	2.13	4.06	5.58	0.72	1.38	2.81	4.06	1.05	1.86	3.67	5.18	1.35	2.46	4.68	6.55	1.64	2.68	4.96	6.80
9	12	1.13	1.82	3.14	4.16	0.90	1.49	2.64	3.59	1.21	1.93	3.35	4.47	1.51	2.47	4.21	5.60	1.05	1.71	3.05	4.30	1.40	2.20	3.87	5.33	1.73	2.80	4.86	6.63	1.94	2.94	5.20	7.07
	16	0.90	1.57	2.91	3.92	0.68	1.26	2.43	3.37	0.97	1.68	3.12	4.23	1.25	2.19	3.94	5.34	0.84	1.49	2.83	4.07	1.17	1.95	3.64	5.08	1.47	2.53	4.59	6.36	1.75	2.77	5.03	6.90
	24	0.46[6]	1.11[7]	2.48	3.48	0.28[6]	0.83[7]	2.03	2.94	0.53[6]	1.21	2.68	3.77	0.77[7]	1.68	3.44	4.84	0.44[7]	1.06	2.43	3.63	0.73[7]	1.49	3.20	4.61	0.99	2.03	4.09	5.84	1.38	2.42	4.69	6.56
10	12	0.90	1.53	2.71	3.63	0.70[7]	1.25	2.31	3.16	0.97	1.64	2.94	3.94	1.25	2.13	3.69	4.95	0.86	1.49	2.74	3.89	1.17	1.93	3.48	4.83	1.47	2.48	4.36	6.01	1.77	2.77	4.97	6.90
	16	0.64[6]	1.25	2.45	3.37	0.46[6]	0.99[7]	2.07	2.91	0.71[7]	1.36	2.67	3.66	0.95	1.82	3.38	4.65	0.62[7]	1.22	2.49	3.62	0.90	1.64	3.21	4.54	1.18	2.17	4.05	5.69	1.54	2.56	4.76	6.69
	24	0.17[6]	0.74[6]	1.99[7]	2.88	0.02[3]	0.51[6]	1.62[6]	2.44[7]	0.23[6]	0.84[6]	2.18[7]	3.15	0.42[6]	1.25[7]	2.83	4.09	0.17[6]	0.74[6]	2.03[7]	3.11	0.41[6]	1.12[7]	2.70	3.99	0.64[7]	1.59	3.47	5.09	1.10	2.14	4.34	6.26
12	12	0.47[6]	0.98[6]	1.90[7]	2.62	0.33[6]	0.78[6]	1.63[7]	2.30	0.53[6]	1.08[7]	2.10	2.88	0.74[6]	1.46	2.65	3.66	0.48[6]	1.01[7]	2.08	2.99	0.72[7]	1.37	2.65	3.73	0.96[7]	1.81	3.33	4.69	1.39	2.36	4.40	6.22
	16	0.18[3]	0.67[6]	1.62[6]	2.33[7]	0.06[3]	0.48[6]	1.36[6]	2.02[7]	0.24[3]	0.76[6]	1.81[6]	2.58[7]	0.41[6]	1.11[6]	2.32[7]	3.32	0.19[6]	0.70[6]	1.78[7]	2.67	0.41[6]	1.03[6]	2.33[7]	3.38	0.61[6]	1.44[7]	2.96	4.31	1.08	2.07	4.10	5.91
	24		0.13[3]	1.13[3]	1.81[6]			0.89[3]	1.51[6]		0.20[3]	1.29[6]	2.03[6]		0.49[6]	1.73[6]	2.72[6]		0.14[3]	1.25[6]	2.09[6]		0.43[6]	1.75[6]	2.76[6]		0.78[6]	2.31[6]	3.62[7]	0.52[7]	1.51	3.54	5.32
14	12	0.13[3]	0.53[3]	1.27[6]	1.83[6]	0.03[3]	0.38[3]	1.08[6]	1.60[6]	0.18[3]	0.61[6]	1.42[6]	2.03[6]	0.32[3]	0.90[6]	1.82[6]	2.61[7]	0.15[3]	0.58[6]	1.46[6]	2.15[7]	0.33[6]	0.86[6]	1.89[6]	2.70	0.50[6]	1.21[6]	2.39[7]	3.44	0.97	1.90	3.71	5.36
	16		0.22[3]	1.00[3]	1.54[6]		0.08[3]	0.82[3]	1.31[6]		0.29[3]	1.14[3]	1.73[6]		0.54[3]	1.49[6]	2.28[6]		0.25[3]	1.15[6]	1.82[6]	0.01[3]	0.50[6]	1.56[6]	2.35[6]	0.14[3]	0.81[6]	2.01[6]	3.05[7]	0.61[6]	1.53	3.34	4.97
	24			0.53[2]	1.04[3]			0.35[2]	0.82[3]			0.64[2]	1.19[3]			0.92[3]	1.69[3]			0.62[3]	1.24[3]			0.98[3]	1.72[6]		0.13[3]	1.36[3]	2.36[6]		0.87[6]	2.66[7]	4.24
16	12		0.20[2]	0.82[3]	1.26[6]		0.09[2]	0.68[3]	1.07[3]		0.26[3]	0.93[3]	1.41[6]	0.01[2]	0.46[3]	1.22[6]	1.85[6]		0.23[3]	0.97[3]	1.49[6]	0.03[3]	0.44[3]	1.30[6]	1.92[6]	0.14[3]	0.71[6]	1.67[6]	2.48[6]	0.58[6]	1.41[7]	2.98	4.42
	16			0.57[2]	0.98[3]			0.42[2]	0.80[3]			0.66[2]	1.12[3]		0.12[2]	0.91[3]	1.53[3]			0.67[3]	1.17[3]		0.09[3]	0.98[3]	1.58[6]		0.32[3]	1.30[3]	2.10[6]	0.18[6]	1.00[6]	2.57[7]	3.97
	24			0.13[2]	0.51[2]				0.34[2]			0.19[2]	0.62[2]			0.38[2]	0.97[2]			0.16[2]	0.62[2]			0.42[2]	0.98[3]			0.68[2]	1.45[3]		0.28[3]	1.83[6]	3.18[6]

15 psf Lateral Load

Wall	Spacing	600S137-(mils)					600S162-(mils)					600S200-(mils)					800S137-(mils)					800S162-(mils)						800S200-(mils)					
Height	(in)	33 ksi		50 ksi			33 ksi		50 ksi			33 ksi		50 ksi			33 ksi		50 ksi			33 ksi		50 ksi				33 ksi		50 ksi			
(ft)	o.c.	(33)	(43)	(54)	(68)	(97)	(33)	(43)	(54)	(68)	(97)	(33)	(43)	(54)	(68)	(97)	(33)	(43)	(54)	(68)	(97)	(33)	(43)	(54)	(68)	(97)	(118)	(33)	(43)	(54)	(68)	(97)	(118)
8	12	1.54	2.28	3.62	4.86	7.38	2.14	3.14	5.37	7.22	11.17	2.57	4.01	7.16	9.69	15.37	1.55	2.27	3.44	4.62	7.10	2.20	3.17	5.26	7.08	11.09	14.16	2.75	4.25	7.53	10.09	15.79	20.28
	16	1.42	2.17	3.53	4.77	7.30	2.00	3.02	5.25	7.10	11.06	2.43	3.86	7.01	9.55	15.23	1.46	2.19	3.38	4.56	7.04	2.10	3.07	5.18	7.00	11.01	14.09	2.65	4.14	7.42	9.99	15.70	20.19
	24	1.19	1.95	3.34	4.58	7.14	1.73	2.77	5.02	6.87	10.83	2.15	3.56	6.71	9.27	14.95	1.30	2.03	3.25	4.44	6.93	1.90	2.89	5.01	6.83	10.85	13.95	2.44	3.93	7.21	9.80	15.51	20.00
9	12	1.44	2.18	3.54	4.78	7.31	2.02	3.03	5.26	7.11	11.06	2.43	3.84	6.92	9.43	15.02	1.48	2.20	3.39	4.57	7.05	2.12	3.09	5.19	7.01	11.02	14.10	2.67	4.16	7.44	10.00	15.71	20.20
	16	1.29	2.04	3.41	4.66	7.21	1.85	2.87	5.11	6.96	10.91	2.26	3.65	6.73	9.25	14.84	1.37	2.10	3.31	4.49	6.98	1.99	2.97	5.08	6.90	10.92	14.01	2.53	4.02	7.30	9.88	15.59	20.08
	24	1.01	1.76	3.17	4.42	7.00	1.51	2.56	4.81	6.67	10.62	1.90	3.27	6.35	8.89	14.48	1.17	1.91	3.14	4.34	6.83	1.75	2.73	4.87	6.69	10.71	13.83	2.27	3.74	7.02	9.63	15.35	19.84
10	12	1.33	2.07	3.44	4.68	7.22	1.89	2.91	5.14	6.98	10.93	2.28	3.65	6.65	9.12	14.60	1.40	2.13	3.33	4.51	6.99	2.02	3.00	5.11	6.93	10.94	14.03	2.57	4.06	7.33	9.90	15.61	20.10
	16	1.15	1.90	3.28	4.53	7.09	1.67	2.71	4.94	6.79	10.74	2.06	3.41	6.41	8.89	14.37	1.27	2.01	3.22	4.42	6.90	1.87	2.85	4.97	6.80	10.81	13.92	2.40	3.88	7.15	9.75	15.46	19.95
	24	0.80	1.55	2.98	4.23	6.83	1.26	2.32	4.57	6.42	10.37	1.63	2.96	5.94	8.45	13.91	1.02	1.76	3.02	4.22	6.72	1.57	2.56	4.70	6.53	10.55	13.69	2.07	3.54	6.81	9.43	15.16	19.65
12	12	1.07	1.81	3.20	4.44	7.00	1.54	2.56	4.76	6.66	10.59	1.91	3.19	5.96	8.33	13.50	1.22	1.96	3.18	4.37	6.86	1.81	2.79	4.91	6.73	10.74	13.85	2.33	3.80	7.06	9.66	15.37	19.85
	16	0.82	1.56	2.97	4.21	6.80	1.25	2.28	4.48	6.37	10.29	1.60	2.86	5.63	8.00	13.16	1.04	1.78	3.03	4.23	6.72	1.59	2.57	4.71	6.53	10.55	13.68	2.09	3.55	6.81	9.42	15.14	19.62
	24	0.35[7]	1.08	2.54	3.78	6.41	0.70	1.75	3.94	5.82	9.73	1.03	2.24	4.98	7.37	12.50	0.68	1.43	2.74	3.95	6.45	1.16	2.15	4.31	6.14	10.16	13.33	1.63	3.05	6.30	8.95	14.68	19.16
14	12	0.78	1.50	2.89	4.12	6.70	1.15	2.13	4.15	5.95	10.05	1.49	2.65	5.14	7.34	12.10	1.01	1.75	3.00	4.20	6.69	1.55	2.53	4.65	6.48	10.48	13.62	2.03	3.45	6.63	9.27	15.04	19.52
	16	0.46[7]	1.17	2.59	3.81	6.42	0.79	1.78	3.79	5.58	9.63	1.11	2.24	4.71	6.92	11.64	0.77	1.51	2.80	4.00	6.50	1.25	2.24	4.38	6.20	10.20	13.37	1.71	3.11	6.28	8.94	14.71	19.18
	24	0.00[6]	0.57[6]	2.02[7]	3.22	5.87	0.14[6]	1.12[7]	3.11	4.87	8.83	0.42[6]	1.48	3.92	6.13	10.77	0.29	1.04	2.40	3.61	6.12	0.69	1.68	3.84	5.66	9.65	12.88	1.10	2.46	5.59	8.29	14.05	18.52
16	12	0.46[6]	1.16	2.53	3.73	6.31	0.75[7]	1.67	3.45	5.08	8.73	1.05	2.09	4.26	6.25	10.49	0.77	1.51	2.79	3.99	6.48	1.25	2.23	4.35	6.16	10.14	13.31	1.68	3.02	6.00	8.55	14.22	18.82
	16	0.09[6]	0.76[6]	2.15[7]	3.33	5.92	0.35[6]	1.26[7]	3.03	4.64	8.21	0.62[6]	1.62	3.76	5.75	9.94	0.46	1.20	2.53	3.73	6.22	0.88	1.86	3.98	5.80	9.77	12.96	1.28	2.59	5.55	8.12	13.78	18.35
	24		0.05[6]	1.47[6]	2.61[6]	5.21		0.51[6]	2.28[6]	3.82[7]	7.28		0.76[6]	2.88[7]	4.84	8.92		0.61	2.02	3.22	5.73	0.19[7]	1.15	3.29	5.09	9.03	12.29	0.54	1.79	4.71	7.30	12.92	17.45

20 psf Lateral Load

Wall	Spacing	350S162-(mils)				362S137-(mils)				362S162-(mils)				362S200-(mils)				400S137-(mils)				400S162-(mils)				400S200-(mils)				550S162-(mils)			
Height	(in)	33 ksi		50 ksi		33 ksi		50 ksi		33 ksi		50 ksi		33 ksi		50 ksi		33 ksi		50 ksi		33 ksi		50 ksi		33 ksi		50 ksi		33 ksi		50 ksi	
(ft)	o.c.	(33)	(43)	(54)	(68)	(33)	(43)	(54)	(68)	(33)	(43)	(54)	(68)	(33)	(43)	(54)	(68)	(33)	(43)	(54)	(68)	(33)	(43)	(54)	(68)	(33)	(43)	(54)	(68)	(33)	(43)	(54)	(68)
8	12	1.16	1.89	3.36	4.46	0.91	1.53	2.77	3.80	1.23	1.99	3.55	4.76	1.55	2.56	4.49	6.01	1.06	1.74	3.14	4.41	1.42	2.25	4.04	5.57	1.76	2.88	5.10	6.97	1.93	2.95	5.22	7.06
	16	0.90	1.62	3.11	4.21	0.67	1.28	2.54	3.56	0.98	1.72	3.30	4.50	1.27	2.27	4.20	5.72	0.83	1.50	2.92	4.18	1.17	1.99	3.79	5.31	1.48	2.60	4.82	6.69	1.74	2.77	5.05	6.89
	24	0.43[6]	1.11	2.64	3.72	0.24[6]	0.81[7]	2.11	3.10	0.50[7]	1.21	2.82	4.01	0.74[7]	1.71	3.65	5.18	0.40[7]	1.04	2.50	3.72	0.70	1.50	3.32	4.81	0.97	2.06	4.28	6.14	1.35	2.41	4.70	6.55
9	12	0.90	1.57	2.91	3.92	0.68	1.26	2.43	3.37	0.97	1.68	3.12	4.23	1.25	2.19	3.94	5.34	0.84	1.49	2.83	4.07	1.17	1.95	3.64	5.08	1.47	2.53	4.59	6.36	1.75	2.77	5.03	6.90
	16	0.60[6]	1.26	2.62	3.62	0.41[6]	0.97[7]	2.16	3.08	0.67[7]	1.36	2.82	3.92	0.92	1.85	3.60	5.00	0.57[7]	1.20	2.56	3.77	0.87	1.64	3.34	4.76	1.15	2.19	4.25	6.01	1.50	2.54	4.80	6.67
	24	0.07[6]	0.69[6]	2.08[7]	3.06		0.44[6]	1.66[6]	2.55[7]	0.13[6]	0.78[6]	2.27[7]	3.34	0.32[6]	1.21[7]	2.97	4.37	0.07[6]	0.67[6]	2.06	3.21	0.33[6]	1.07[7]	2.78	4.16	0.55[7]	1.56	3.61	5.35	1.03	2.09	4.36	6.23
10	12	0.64[6]	1.25	2.45	3.37	0.46[6]	0.99[7]	2.07	2.91	0.71[7]	1.36	2.67	3.66	0.95	1.82	3.38	4.65	0.62[7]	1.22	2.49	3.62	0.90	1.64	3.21	4.54	1.18	2.17	4.05	5.69	1.54	2.56	4.76	6.69
	16	0.32[6]	0.91[6]	2.14[7]	3.03	0.16[6]	0.66[6]	1.77[7]	2.59	0.38[6]	1.01[6]	2.34	3.32	0.59[6]	1.43[7]	3.00	4.27	0.31[6]	0.89	2.18	3.28	0.57[6]	1.29	2.87	4.17	0.81[7]	1.78	3.66	5.29	1.24	2.28	4.48	6.40
	24		0.29[6]	1.56[6]	2.43[6]		0.09[3]	1.22[6]	2.01[6]		0.38[6]	1.74[6]	2.69[7]		0.74[6]	2.32[6]	3.58[7]		0.30[6]	1.61[6]	2.65[7]		0.64[6]	2.24[7]	3.48	0.15[6]	1.07[6]	2.94	4.54	0.69	1.74	3.94	5.85
12	12	0.18[3]	0.67[6]	1.62[6]	2.33[7]	0.06[3]	0.48[6]	1.36[6]	2.02[7]	0.24[3]	0.76[6]	1.81[6]	2.58[7]	0.41[6]	1.11[6]	2.32[7]	3.32	0.19[6]	0.70[6]	1.78[7]	2.67	0.41[6]	1.03[6]	2.33[7]	3.38	0.61[6]	1.44[7]	2.96	4.31	1.08	2.07	4.10	5.91
	16		0.30[3]	1.29[6]	1.97[6]		0.13[3]	1.04[6]	1.67[6]		0.38[3]	1.45[6]	2.20[6]	0.01[3]	0.69[6]	1.92[6]	2.91[7]		0.32[6]	1.42[6]	2.27[6]	0.04[3]	0.62[6]	1.94[6]	2.96[7]	0.20[6]	0.99[6]	2.52[7]	3.84	0.70[7]	1.69	3.72	5.51
	24			0.70[3]	1.35[3]			0.48[3]	1.06[3]			0.84[3]	1.55[3]			1.21[3]	2.19[6]			0.79[3]	1.58[6]			1.25[3]	2.20[6]		0.20[3]	1.73[6]	3.00[6]	0.00[6]	0.99[7]	3.01	4.76
14	12		0.22[3]	1.00[3]	1.54[6]		0.08[3]	0.82[3]	1.31[6]		0.29[3]	1.14[3]	1.73[6]		0.54[3]	1.49[6]	2.28[6]		0.25[3]	1.15[6]	1.82[6]	0.01[3]	0.50[6]	1.56[6]	2.35[6]	0.14[3]	0.81[6]	2.01[6]	3.05[7]	0.61[6]	1.53	3.34	4.97
	16			0.68[3]	1.20[3]			0.50[2]	0.97[3]			0.79[3]	1.36[3]		0.12[3]	1.10[3]	1.88[6]			0.79[3]	1.42[3]		0.08[3]	1.16[3]	1.92[6]		0.35[3]	1.57[6]	2.58[6]	0.17[6]	1.08[6]	2.88[7]	4.48
	24			0.13[2]	0.60[2]				0.39[2]			0.21[2]	0.73[2]			0.43[2]	1.18[3]			0.16[2]	0.73[2]			0.48[2]	1.18[3]			0.79[3]	1.76[3]		0.26[6]	2.05[6]	3.59[6]
16	12			0.57[2]	0.98[3]			0.42[2]	0.80[3]			0.66[2]	1.12[3]		0.12[2]	0.91[3]	1.53[3]			0.67[3]	1.17[3]		0.09[3]	0.98[3]	1.58[6]		0.32[3]	1.30[3]	2.10[6]	0.18[6]	1.00[6]	2.57[7]	3.97
	16			0.26[2]	0.66[2]			0.13[2]	0.49[2]			0.34[2]	0.77[2]			0.54[2]	1.15[3]			0.32[2]	0.80[3]			0.60[2]	1.17[3]			0.87[3]	1.65[3]		0.51[6]	2.07[6]	3.43[6]
	24				0.11[2]								0.19[2]				0.50[2]				0.15[2]				0.48[2]			0.14[2]	0.89[2]			1.19[3]	2.48[6]

[1] Deflection exceeds L/120
[2] Deflection exceeds L/240
[3] Deflection exceeds L/360
[6] Deflection exceeds L/600
[7] Deflection exceeds L/720
– If not noted, deflection is less than L/720.

20 psf Lateral Load

Wall	Spacing	600S137-(mils)					600S162-(mils)					600S200-(mils)					800S137-(mils)					800S162-(mils)						800S200-(mils)					
Height	(in)	33 ksi		50 ksi			33 ksi		50 ksi			33 ksi		50 ksi			33 ksi		50 ksi			33 ksi		50 ksi				33 ksi		50 ksi			
(ft)	o.c.	(33)	(43)	(54)	(68)	(97)	(33)	(43)	(54)	(68)	(97)	(33)	(43)	(54)	(68)	(97)	(33)	(43)	(54)	(68)	(97)	(33)	(43)	(54)	(68)	(97)	(118)	(33)	(43)	(54)	(68)	(97)	(118)
8	12	1.42	2.17	3.53	4.77	7.30	2.00	3.02	5.25	7.10	11.06	2.43	3.86	7.01	9.55	15.23	1.46	2.19	3.38	4.56	7.04	2.10	3.07	5.18	7.00	11.01	14.09	2.65	4.14	7.42	9.99	15.70	20.19
	16	1.27	2.02	3.40	4.65	7.20	1.82	2.85	5.10	6.95	10.91	2.25	3.66	6.81	9.36	15.04	1.35	2.09	3.29	4.48	6.97	1.97	2.95	5.06	6.89	10.91	14.00	2.51	4.00	7.28	9.86	15.57	20.06
	24	0.97	1.73	3.15	4.40	6.99	1.47	2.53	4.79	6.65	10.61	1.88	3.27	6.42	9.00	14.67	1.14	1.88	3.12	4.32	6.81	1.71	2.70	4.84	6.67	10.69	13.81	2.23	3.71	6.99	9.60	15.33	19.82
9	12	1.29	2.04	3.41	4.66	7.21	1.85	2.87	5.11	6.96	10.91	2.26	3.65	6.73	9.25	14.84	1.37	2.10	3.31	4.49	6.98	1.99	2.97	5.08	6.90	10.92	14.01	2.53	4.02	7.30	9.88	15.59	20.08
	16	1.10	1.85	3.25	4.50	7.07	1.62	2.66	4.91	6.76	10.72	2.02	3.40	6.48	9.01	14.60	1.24	1.97	3.20	4.39	6.88	1.83	2.81	4.94	6.76	10.78	13.89	2.36	3.84	7.11	9.71	15.43	19.92
	24	0.73	1.48	2.93	4.18	6.80	1.18	2.25	4.51	6.38	10.34	1.56	2.91	5.98	8.54	14.12	0.96	1.71	2.98	4.18	6.68	1.50	2.50	4.65	6.48	10.51	13.65	2.01	3.47	6.75	9.38	15.11	19.60
10	12	1.15	1.90	3.28	4.53	7.09	1.67	2.71	4.94	6.79	10.74	2.06	3.41	6.41	8.89	14.37	1.27	2.01	3.22	4.42	6.90	1.87	2.85	4.97	6.80	10.81	13.92	2.40	3.88	7.15	9.75	15.46	19.95
	16	0.92	1.67	3.08	4.33	6.92	1.40	2.45	4.69	6.55	10.50	1.77	3.11	6.10	8.59	14.06	1.10	1.84	3.09	4.29	6.78	1.67	2.65	4.79	6.62	10.64	13.76	2.18	3.65	6.92	9.54	15.26	19.75
	24	0.47	1.22	2.69	3.94	6.58	0.86	1.94	4.20	6.06	10.01	1.22	2.51	5.49	8.01	13.47	0.77	1.52	2.83	4.03	6.54	1.27	2.27	4.43	6.27	10.29	13.46	1.75	3.20	6.47	9.12	14.85	19.35
12	12	0.82	1.56	2.97	4.21	6.80	1.25	2.28	4.48	6.37	10.29	1.60	2.86	5.63	8.00	13.16	1.04	1.78	3.03	4.23	6.72	1.59	2.57	4.71	6.53	10.55	13.68	2.09	3.55	6.81	9.42	15.14	19.62
	16	0.50	1.24	2.68	3.92	6.54	0.88	1.92	4.11	6.00	9.91	1.22	2.44	5.19	7.58	12.72	0.80	1.54	2.84	4.04	6.54	1.30	2.29	4.44	6.27	10.29	13.45	1.78	3.22	6.47	9.11	14.83	19.32
	24		0.63[7]	2.13	3.36	6.03	0.19[6]	1.24	3.43	5.30	9.18	0.50[7]	1.66	4.37	6.77	11.86	0.33	1.09	2.46	3.67	6.19	0.74	1.74	3.93	5.76	9.77	12.99	1.17	2.57	5.81	8.49	14.22	18.71
14	12	0.46[7]	1.17	2.59	3.81	6.42	0.79	1.78	3.79	5.58	9.63	1.11	2.24	4.71	6.92	11.64	0.77	1.51	2.80	4.00	6.50	1.25	2.24	4.38	6.20	10.20	13.37	1.71	3.11	6.28	8.94	14.71	19.18
	16	0.07[6]	0.76[7]	2.21	3.42	6.05	0.35[6]	1.33[7]	3.33	5.10	9.09	0.64[7]	1.73	4.18	6.38	11.06	0.45	1.19	2.54	3.74	6.25	0.87	1.86	4.02	5.84	9.84	13.04	1.30	2.67	5.82	8.50	14.27	18.74
	24		0.01[6]	1.50[6]	2.68[7]	5.35		0.52[6]	2.49[6]	4.21	8.09	0.00[6]	0.79[6]	3.19[7]	5.39	9.97		0.59	2.02	3.24	5.76	0.15[7]	1.14	3.32	5.14	9.12	12.40	0.52	1.83	4.94	7.66	13.41	17.87
16	12	0.09[6]	0.76[6]	2.15[7]	3.33	5.92	0.35[6]	1.26[7]	3.03	4.64	8.21	0.62[6]	1.62	3.76	5.75	9.94	0.46	1.20	2.53	3.73	6.22	0.88	1.86	3.98	5.80	9.77	12.96	1.28	2.59	5.55	8.12	13.78	18.35
	16		0.28[6]	1.69[6]	2.84[7]	5.44		0.75[6]	2.52[6]	4.08	7.58	0.10[6]	1.04[6]	3.16[7]	5.13	9.25	0.07[7]	0.80	2.18	3.39	5.89	0.41[7]	1.38	3.52	5.32	9.27	12.51	0.78	2.05	4.98	7.57	13.20	17.75
	24			0.85[3]	1.95[6]	4.56[6]			1.60[6]	3.09[6]	6.44[7]		0.01[6]	2.09[6]	4.03[6]	8.00		0.06[6]	1.53[7]	2.73	5.24		0.49[7]	2.63	4.42	8.33	11.65		1.03	3.91	6.52	12.09	16.58

25 psf Lateral Load

Wall	Spacing	350S162-(mils)				362S137-(mils)				362S162-(mils)				362S200-(mils)				400S137-(mils)				400S162-(mils)				400S200-(mils)				550S162-(mils)			
Height	(in)	33 ksi		50 ksi		33 ksi		50 ksi		33 ksi		50 ksi		33 ksi		50 ksi		33 ksi		50 ksi		33 ksi		50 ksi		33 ksi		50 ksi		33 ksi		50 ksi	
(ft)	o.c.	(33)	(43)	(54)	(68)	(33)	(43)	(54)	(68)	(33)	(43)	(54)	(68)	(33)	(43)	(54)	(68)	(33)	(43)	(54)	(68)	(33)	(43)	(54)	(68)	(33)	(43)	(54)	(68)	(33)	(43)	(54)	(68)
8	12	0.97	1.68	3.17	4.27	0.73	1.34	2.60	3.61	1.04	1.78	3.36	4.57	1.34	2.34	4.27	5.79	0.89	1.56	2.98	4.24	1.23	2.05	3.85	5.37	1.55	2.67	4.89	6.76	1.79	2.82	5.09	6.93
	16	0.66[7]	1.36	2.87	3.96	0.45[7]	1.04	2.32	3.33	0.73	1.46	3.05	4.25	1.00	1.99	3.92	5.45	0.61	1.27	2.71	3.94	0.93	1.74	3.55	5.06	1.22	2.32	4.55	6.41	1.54	2.59	4.87	6.72
	24	0.09[6]	0.76[6]	2.30[7]	3.38		0.49[6]	1.81[7]	2.78	0.16[6]	0.86[7]	2.48	3.66	0.37[6]	1.33	3.26	4.79	0.10[6]	0.72[7]	2.19	3.39	0.37[7]	1.15	2.98	4.45	0.60[7]	1.67	3.89	5.75	1.07	2.14	4.44	6.30
9	12	0.67[7]	1.33	2.69	3.70	0.48[6]	1.04	2.23	3.15	0.74[7]	1.44	2.89	3.99	1.00	1.93	3.68	5.08	0.64	1.27	2.63	3.84	0.94	1.72	3.41	4.84	1.23	2.28	4.34	6.10	1.56	2.59	4.86	6.73
	16	0.33[6]	0.96[7]	2.34	3.34	0.16[6]	0.70[6]	1.90[7]	2.81	0.39[6]	1.06[7]	2.54	3.62	0.61[6]	1.52	3.28	4.68	0.32[6]	0.93[7]	2.31	3.49	0.59[7]	1.35	3.06	4.45	0.84	1.87	3.92	5.68	1.26	2.31	4.58	6.45
	24		0.29[6]	1.71[6]	2.68[7]		0.07[6]	1.32[6]	2.18[6]		0.39[6]	1.89[6]	2.94[7]		0.78[6]	2.54[7]	3.93		0.29[6]	1.70[6]	2.82[7]		0.66[6]	2.39[7]	3.73	0.14[6]	1.12[7]	3.16	4.89	0.69	1.76	4.04	5.91
10	12	0.39[6]	0.99[6]	2.21	3.11	0.23[6]	0.74[6]	1.84[7]	2.67	0.46[6]	1.09[7]	2.42	3.40	0.68[6]	1.53	3.10	4.36	0.39[6]	0.97[7]	2.26	3.36	0.65[7]	1.38	2.95	4.26	0.90	1.87	3.75	5.39	1.32	2.34	4.55	6.47
	16	0.02[3]	0.59[6]	1.84[6]	2.72[7]		0.37[6]	1.49[6]	2.29[7]	0.08[6]	0.68[6]	2.03[6]	2.99	0.25[6]	1.07[6]	2.65[7]	3.91	0.03[6]	0.59[6]	1.89[7]	2.95	0.26[6]	0.96[7]	2.54	3.82	0.47[6]	1.41[7]	3.29	4.91	0.96	2.00	4.21	6.13
	24			1.17[6]	2.02[6]			0.85[3]	1.61[6]			1.34[6]	2.26[6]		0.27[6]	1.86[6]	3.11[6]			1.22[6]	2.21[6]		0.20[6]	1.81[6]	3.01[7]		0.58[6]	2.45[6]	4.03[7]	0.29[7]	1.35	3.56	5.46
12	12		0.39[3]	1.37[6]	2.06[6]		0.21[3]	1.12[6]	1.75[6]		0.47[6]	1.54[6]	2.29[6]	0.11[3]	0.79[6]	2.01[6]	3.01[7]		0.41[6]	1.51[6]	2.37[7]	0.13[6]	0.72[6]	2.03[6]	3.06[7]	0.30[6]	1.10[6]	2.62[7]	3.95	0.79	1.78	3.82	5.61
	16			0.99[3]	1.65[6]			0.75[3]	1.36[6]		0.03[3]	1.13[3]	1.86[6]		0.30[3]	1.55[6]	2.53[6]			1.09[6]	1.91[6]		0.25[3]	1.58[6]	2.56[6]		0.58[6]	2.11[6]	3.41[7]	0.34[6]	1.33	3.36	5.13
	24			0.32[2]	0.94[3]			0.10[2]	0.66[3]			0.43[2]	1.11[3]			0.75[3]	1.70[3]			0.37[3]	1.11[3]			0.78[3]	1.70[3]			1.20[3]	2.45[6]		0.50[6]	2.51[7]	4.24
14	12			0.76[3]	1.28[3]			0.58[3]	1.06[3]			0.87[3]	1.45[3]		0.22[3]	1.20[3]	1.97[6]			0.87[3]	1.52[6]		0.18[3]	1.26[6]	2.02[6]		0.46[3]	1.67[6]	2.69[6]	0.28[6]	1.19[7]	2.99	4.60
	16			0.39[2]	0.89[3]			0.22[2]	0.67[2]			0.48[2]	1.04[3]			0.75[3]	1.51[3]			0.46[2]	1.06[3]			0.81[3]	1.54[3]			1.16[3]	2.15[6]		0.66[6]	2.45[6]	4.02[7]
	24				0.21[2]				0.01[2]				0.32[2]				0.72[2]				0.28[2]			0.03[2]	0.70[2]			0.28[2]	1.23[3]		0.00[3]	1.49[6]	2.98[6]
16	12			0.34[2]	0.73[2]			0.20[2]	0.56[2]			0.41[2]	0.86[2]			0.63[2]	1.24[3]			0.40[2]	0.89[3]			0.68[3]	1.27[3]			0.97[3]	1.76[3]		0.63[6]	2.19[6]	3.56[7]
	16				0.37[2]				0.20[2]			0.05[2]	0.47[2]			0.22[2]	0.81[2]				0.46[2]			0.25[2]	0.81[2]			0.49[2]	1.26[3]		0.06[3]	1.61[6]	2.94[6]
	24																0.08[2]								0.02[2]				0.39[2]			0.60[3]	1.84[3]

25 psf Lateral Load

Wall	Spacing	600S137-(mils)					600S162-(mils)					600S200-(mils)					800S137-(mils)					800S162-(mils)						800S200-(mils)					
Height	(in)	33 ksi		50 ksi			33 ksi		50 ksi			33 ksi		50 ksi			33 ksi		50 ksi			33 ksi		50 ksi				33 ksi		50 ksi			
(ft)	o.c.	(33)	(43)	(54)	(68)	(97)	(33)	(43)	(54)	(68)	(97)	(33)	(43)	(54)	(68)	(97)	(33)	(43)	(54)	(68)	(97)	(33)	(43)	(54)	(68)	(97)	(118)	(33)	(43)	(54)	(68)	(97)	(118)
8	12	1.31	2.06	3.43	4.68	7.22	1.87	2.89	5.14	6.99	10.94	2.29	3.71	6.86	9.41	15.09	1.38	2.11	3.31	4.50	6.98	2.00	2.98	5.09	6.92	10.93	14.02	2.55	4.03	7.31	9.89	15.60	20.09
	16	1.12	1.87	3.27	4.52	7.09	1.64	2.69	4.94	6.80	10.76	2.06	3.46	6.61	9.18	14.86	1.25	1.98	3.21	4.40	6.89	1.84	2.82	4.95	6.78	10.80	13.91	2.37	3.85	7.14	9.73	15.45	19.94
	24	0.75	1.51	2.96	4.22	6.83	1.21	2.28	4.56	6.43	10.39	1.60	2.98	6.12	8.72	14.40	0.98	1.72	3.00	4.20	6.70	1.52	2.52	4.67	6.51	10.53	13.67	2.03	3.49	6.78	9.41	15.14	19.64
9	12	1.15	1.90	3.29	4.54	7.10	1.68	2.71	4.96	6.81	10.77	2.08	3.46	6.54	9.07	14.66	1.27	2.01	3.22	4.42	6.90	1.87	2.85	4.97	6.80	10.82	13.92	2.40	3.88	7.16	9.75	15.47	19.96
	16	0.91	1.67	3.09	4.34	6.93	1.40	2.45	4.71	6.57	10.53	1.79	3.15	6.23	8.77	14.36	1.10	1.84	3.09	4.29	6.78	1.66	2.65	4.79	6.62	10.64	13.77	2.18	3.65	6.93	9.54	15.27	19.76
	24	0.46	1.21	2.70	3.95	6.59	0.86	1.95	4.22	6.09	10.05	1.23	2.55	5.61	8.19	13.77	0.76	1.51	2.82	4.03	6.54	1.26	2.26	4.44	6.27	10.30	13.47	1.75	3.20	6.48	9.13	14.87	19.37
10	12	0.97	1.72	3.13	4.38	6.96	1.46	2.51	4.75	6.61	10.56	1.84	3.18	6.17	8.67	14.14	1.15	1.88	3.12	4.32	6.81	1.72	2.70	4.84	6.66	10.68	13.80	2.24	3.71	6.98	9.59	15.31	19.80
	16	0.69	1.44	2.88	4.13	6.75	1.13	2.19	4.44	6.30	10.25	1.49	2.81	5.79	8.30	13.76	0.93	1.68	2.96	4.16	6.66	1.47	2.46	4.61	6.44	10.46	13.61	1.97	3.42	6.70	9.33	15.05	19.55
	24	0.14[7]	0.89	2.40	3.65	6.32	0.48	1.58	3.84	5.71	9.65	0.82	2.08	5.05	7.59	13.03	0.52	1.28	2.63	3.84	6.36	0.97	1.98	4.17	6.01	10.03	13.23	1.43	2.86	6.13	8.81	14.55	19.05
12	12	0.58	1.32	2.75	3.99	6.61	0.97	2.01	4.20	6.09	10.01	1.31	2.55	5.30	7.68	12.83	0.86	1.60	2.89	4.09	6.59	1.37	2.36	4.51	6.34	10.35	13.51	1.86	3.30	6.55	9.18	14.91	19.39
	16	0.20[7]	0.93	2.40	3.63	6.28	0.53[7]	1.58	3.77	5.64	9.54	0.85	2.04	4.78	7.17	12.28	0.56	1.31	2.65	3.86	6.37	1.02	2.01	4.18	6.02	10.03	13.22	1.48	2.89	6.13	8.80	14.53	19.01
	24		0.20[6]	1.73[7]	2.95	5.66		0.76[7]	2.94	4.79	8.66		1.10[7]	3.79	6.20	11.25		0.75	2.17	3.40	5.92	0.33	1.34	3.55	5.38	9.39	12.66	0.73	2.10	5.32	8.04	13.78	18.26
14	12	0.16[6]	0.86[7]	2.30	3.51	6.14	0.45[6]	1.44	3.44	5.21	9.22	0.76[7]	1.85	4.31	6.51	11.20	0.53	1.27	2.60	3.81	6.31	0.97	1.96	4.11	5.93	9.93	13.12	1.40	2.78	5.93	8.61	14.38	18.85
	16		0.38[6]	1.84[7]	3.04	5.70		0.91[6]	2.90[7]	4.64	8.58	0.21[6]	1.25[7]	3.67	5.87	10.50	0.14	0.89	2.28	3.49	6.00	0.51	1.49	3.66	5.49	9.48	12.72	0.91	2.24	5.37	8.08	13.83	18.30
	24			1.00[6]	2.16[6]	4.86[7]			1.92[6]	3.60[6]	7.39		0.14[6]	2.52[6]	4.70[7]	9.21		0.16[7]	1.64	2.87	5.39		0.62	2.81	4.63	8.60	11.92		1.22	4.30	7.05	12.79	17.23
16	12		0.39[6]	1.80[6]	2.96[7]	5.56		0.87[6]	2.64[7]	4.22	7.74	0.23[6]	1.18[6]	3.31	5.28	9.42	0.17[7]	0.90	2.27	3.47	5.97	0.53	1.50	3.63	5.44	9.40	12.63	0.91	2.18	5.12	7.71	13.34	17.90
	16			1.25[6]	2.38[6]	4.99[7]		0.28[6]	2.04[6]	3.57[6]	6.99		0.50[6]	2.61[6]	4.56[7]	8.61		0.42[7]	1.85	3.06	5.56		0.93	3.07	4.86	8.79	12.08	0.31[7]	1.53	4.43	7.04	12.64	17.16
	24			0.28[3]	1.35[3]	3.95[6]			0.98[3]	2.42[6]	5.67[6]			1.37[6]	3.28[6]	7.16[7]			1.06[6]	2.27[7]	4.77			2.01[7]	3.78	7.65	11.02		0.32[6]	3.15	5.77	11.30	15.75

[1] Deflection exceeds L/120
[2] Deflection exceeds L/240
[3] Deflection exceeds L/360
[6] Deflection exceeds L/600
[7] Deflection exceeds L/720
– If not noted, deflection is less than L/720.

See Combined Axial and Lateral Load Table Notes on page 23.

Complies with 2009 & 2012 International Building Code (IBC)

30 psf Lateral Load

Wall	Spacing	350S162-(mils)				362S137-(mils)				362S162-(mils)				362S200-(mils)				400S137-(mils)				400S162-(mils)				400S200-(mils)				550S162-(mils)			
Height	(in)	33 ksi		50 ksi		33 ksi		50 ksi		33 ksi		50 ksi		33 ksi		50 ksi		33 ksi		50 ksi		33 ksi		50 ksi		33 ksi		50 ksi		33 ksi		50 ksi	
(ft)	o.c.	(33)	(43)	(54)	(68)	(33)	(43)	(54)	(68)	(33)	(43)	(54)	(68)	(33)	(43)	(54)	(68)	(33)	(43)	(54)	(68)	(33)	(43)	(54)	(68)	(33)	(43)	(54)	(68)	(33)	(43)	(54)	(68)
8	12	0.78	1.49	2.99	4.08	0.56[7]	1.16	2.43	3.44	0.85	1.59	3.17	4.38	1.13	2.13	4.06	5.58	0.72	1.38	2.81	4.06	1.05	1.86	3.67	5.18	1.35	2.46	4.68	6.55	1.64	2.68	4.96	6.80
	16	0.43[6]	1.11[7]	2.64	3.72	0.24[6]	0.81[7]	2.11	3.10	0.50[7]	1.21	2.82	4.01	0.74[7]	1.71	3.65	5.18	0.40[7]	1.04	2.50	3.72	0.70	1.50	3.32	4.81	0.97	2.06	4.28	6.14	1.35	2.41	4.70	6.55
	24		0.42[6]	1.99[6]	3.05		0.18[6]	1.52[6]	2.47[7]		0.52[6]	2.16[7]	3.32	0.02[6]	0.95[7]	2.89	4.42		0.41[6]	1.90[7]	3.07	0.05[6]	0.81[7]	2.66	4.10	0.26[6]	1.30	3.52	5.37	0.79	1.88	4.19	6.05
9	12	0.46[6]	1.11[7]	2.48	3.48	0.28[6]	0.83[7]	2.03	2.94	0.53[6]	1.21	2.68	3.77	0.77[7]	1.68	3.44	4.84	0.44[7]	1.06	2.43	3.63	0.73[7]	1.49	3.20	4.61	0.99	2.03	4.09	5.84	1.38	2.42	4.69	6.56
	16	0.07[6]	0.69[6]	2.08[7]	3.06		0.44[6]	1.66[6]	2.55[7]	0.13[6]	0.78[6]	2.27[7]	3.34	0.32[6]	1.21[7]	2.97	4.37	0.07[6]	0.67[6]	2.06	3.21	0.33[6]	1.07[7]	2.78	4.16	0.55[7]	1.56	3.61	5.35	1.03	2.09	4.36	6.23
	24			1.37[6]	2.31[6]			0.99[6]	1.84[6]		0.02[6]	1.54[6]	2.57[6]		0.37[6]	2.12[6]	3.51[7]			1.37[6]	2.45[6]		0.28[6]	2.02[6]	3.33[7]		0.70[6]	2.73[7]	4.45	0.35	1.44	3.72	5.59
10	12	0.17[6]	0.74[6]	1.99[7]	2.88	0.02[3]	0.51[6]	1.62[6]	2.44[7]	0.23[6]	0.84[6]	2.18[7]	3.15	0.42[6]	1.25[7]	2.83	4.09	0.17[6]	0.74[6]	2.03[7]	3.11	0.41[6]	1.12[7]	2.70	3.99	0.64[7]	1.59	3.47	5.09	1.10	2.14	4.34	6.26
	16		0.29[6]	1.56[6]	2.43[6]		0.09[3]	1.22[6]	2.01[6]		0.38[6]	1.74[6]	2.69[7]		0.74[6]	2.32[6]	3.58[7]		0.30[6]	1.61[6]	2.65[7]		0.64[6]	2.24[7]	3.48	0.15[6]	1.07[6]	2.94	4.54	0.69	1.74	3.94	5.85
	24			0.81[3]	1.63[6]			0.51[3]	1.25[3]			0.96[3]	1.86[6]			1.43[6]	2.66[6]			0.85[3]	1.80[6]			1.40[6]	2.57[6]		0.13[6]	1.98[6]	3.54[6]		0.97[7]	3.18	5.07
12	12		0.13[3]	1.13[3]	1.81[6]			0.89[3]	1.51[6]		0.20[3]	1.29[6]	2.03[6]		0.49[6]	1.73[6]	2.72[6]		0.14[3]	1.25[6]	2.09[6]		0.43[6]	1.75[6]	2.76[6]		0.78[6]	2.31[6]	3.62[7]	0.52[7]	1.51	3.54	5.32
	16			0.70[3]	1.35[3]			0.48[3]	1.06[3]			0.84[3]	1.55[3]			1.21[3]	2.19[6]			0.79[3]	1.58[6]			1.25[3]	2.20[6]		0.20[3]	1.73[6]	3.00[6]		0.99[7]	3.01	4.76
	24				0.56[2]				0.29[2]			0.05[2]	0.71[2]			0.31[2]	1.26[3]				0.68[3]			0.36[2]	1.23[3]			0.71[3]	1.93[3]		0.04[6]	2.04[6]	3.74[7]
14	12			0.53[2]	1.04[3]			0.35[2]	0.82[3]			0.64[2]	1.19[3]			0.92[3]	1.69[3]			0.62[3]	1.24[3]			0.98[3]	1.72[6]		0.13[3]	1.36[3]	2.36[6]		0.87[6]	2.66[7]	4.24
	16			0.13[2]	0.60[2]				0.39[2]			0.21[2]	0.73[2]			0.43[2]	1.18[3]			0.16[2]	0.73[2]			0.48[2]	1.18[3]			0.79[3]	1.76[3]		0.26[6]	2.05[6]	3.59[6]
	24																0.31[2]								0.25[2]				0.74[2]			0.96[3]	2.41[6]
16	12			0.13[2]	0.51[2]				0.34[2]			0.19[2]	0.62[2]			0.38[2]	0.97[2]			0.16[2]	0.62[2]			0.42[2]	0.98[3]			0.68[2]	1.45[3]		0.28[3]	1.83[6]	3.18[6]
	16				0.11[2]								0.19[2]				0.50[2]				0.15[2]				0.48[2]			0.14[2]	0.89[2]			1.19[3]	2.48[6]
	24																															0.07[2]	1.26[3]

30 psf Lateral Load

Wall	Spacing	600S137-(mils)					600S162-(mils)					600S200-(mils)					800S137-(mils)					800S162-(mils)						800S200-(mils)					
Height	(in)	33 ksi		50 ksi			33 ksi		50 ksi			33 ksi		50 ksi			33 ksi		50 ksi			33 ksi		50 ksi				33 ksi		50 ksi			
(ft)	o.c.	(33)	(43)	(54)	(68)	(97)	(33)	(43)	(54)	(68)	(97)	(33)	(43)	(54)	(68)	(97)	(33)	(43)	(54)	(68)	(97)	(33)	(43)	(54)	(68)	(97)	(118)	(33)	(43)	(54)	(68)	(97)	(118)
8	12	1.19	1.95	3.34	4.58	7.14	1.73	2.77	5.02	6.87	10.83	2.15	3.56	6.71	9.27	14.95	1.30	2.03	3.25	4.44	6.93	1.90	2.89	5.01	6.83	10.85	13.95	2.44	3.93	7.21	9.80	15.51	20.00
	16	0.97	1.73	3.15	4.40	6.99	1.47	2.53	4.79	6.65	10.61	1.88	3.27	6.42	9.00	14.67	1.14	1.88	3.12	4.32	6.81	1.71	2.70	4.84	6.67	10.69	13.81	2.23	3.71	6.99	9.60	15.33	19.82
	24	0.53	1.30	2.78	4.04	6.67	0.95	2.05	4.33	6.21	10.17	1.34	2.69	5.84	8.45	14.12	0.82	1.57	2.87	4.08	6.59	1.33	2.33	4.50	6.34	10.37	13.53	1.82	3.28	6.57	9.21	14.96	19.45
9	12	1.01	1.76	3.17	4.42	7.00	1.51	2.56	4.81	6.67	10.62	1.90	3.27	6.35	8.89	14.48	1.17	1.91	3.14	4.34	6.83	1.75	2.73	4.87	6.69	10.71	13.83	2.27	3.74	7.02	9.63	15.35	19.84
	16	0.73	1.48	2.93	4.18	6.80	1.18	2.25	4.51	6.38	10.34	1.56	2.91	5.98	8.54	14.12	0.96	1.71	2.98	4.18	6.68	1.50	2.50	4.65	6.48	10.51	13.65	2.01	3.47	6.75	9.38	15.11	19.60
	24	0.19	0.95	2.47	3.72	6.39	0.54	1.65	3.94	5.81	9.77	0.90	2.20	5.26	7.85	13.42	0.56	1.32	2.66	3.88	6.39	1.02	2.03	4.22	6.07	10.09	13.29	1.49	2.92	6.21	8.88	14.63	19.13
10	12	0.80	1.55	2.98	4.23	6.83	1.26	2.32	4.57	6.42	10.37	1.63	2.96	5.94	8.45	13.91	1.02	1.76	3.02	4.22	6.72	1.57	2.56	4.70	6.53	10.55	13.69	2.07	3.54	6.81	9.43	15.16	19.65
	16	0.47	1.22	2.69	3.94	6.58	0.86	1.94	4.20	6.06	10.01	1.22	2.51	5.49	8.01	13.47	0.77	1.52	2.83	4.03	6.54	1.27	2.27	4.43	6.27	10.29	13.46	1.75	3.20	6.47	9.12	14.85	19.35
	24		0.57	2.12	3.37	6.07	0.11[7]	1.22	3.49	5.36	9.30	0.44	1.67	4.62	7.18	12.60	0.28	1.04	2.43	3.65	6.18	0.68	1.70	3.91	5.75	9.78	13.01	1.12	2.53	5.80	8.50	14.25	18.75
12	12	0.35[7]	1.08	2.54	3.78	6.41	0.70	1.75	3.94	5.82	9.73	1.03	2.24	4.98	7.37	12.50	0.68	1.43	2.74	3.95	6.45	1.16	2.15	4.31	6.14	10.16	13.33	1.63	3.05	6.30	8.95	14.68	19.16
	16		0.63[7]	2.13	3.36	6.03	0.19[6]	1.24	3.43	5.30	9.18	0.50[7]	1.66	4.37	6.77	11.86	0.33	1.09	2.46	3.67	6.19	0.74	1.74	3.93	5.76	9.77	12.99	1.17	2.57	5.81	8.49	14.22	18.71
	24			1.35[6]	2.56[7]	5.30		0.31[6]	2.47[7]	4.31	8.14		0.57[6]	3.23	5.65	10.65		0.42	1.90	3.12	5.66		0.94	3.17	5.01	9.02	12.32	0.30	1.64	4.85	7.59	13.33	17.82
14	12		0.57[6]	2.02[7]	3.22	5.87	0.14[6]	1.12[7]	3.11	4.87	8.83	0.42[6]	1.48	3.92	6.13	10.77	0.29	1.04	2.40	3.61	6.12	0.69	1.68	3.84	5.66	9.65	12.88	1.10	2.46	5.59	8.29	14.05	18.52
	16		0.01[6]	1.50[6]	2.68[7]	5.35		0.52[6]	2.49[6]	4.21	8.09		0.79[6]	3.19[7]	5.39	9.97		0.59	2.02	3.24	5.76	0.15[7]	1.14	3.32	5.14	9.12	12.40	0.52	1.83	4.94	7.66	13.41	17.87
	24			0.54[3]	1.68[6]	4.38[6]			1.38[6]	3.02[6]	6.74[7]			1.88[6]	4.05[6]	8.48			1.28[7]	2.50	5.04		0.12[7]	2.33	4.14	8.08	11.46		0.64	3.69	6.45	12.17	16.61
16	12		0.05[6]	1.47[6]	2.61[6]	5.21		0.51[6]	2.28[6]	3.82[7]	7.28		0.76[6]	2.88[7]	4.84	8.92		0.61	2.02	3.22	5.73	0.19[7]	1.15	3.29	5.09	9.03	12.29	0.54	1.79	4.71	7.30	12.92	17.45
	16			0.85[3]	1.95[6]	4.56[6]			1.60[6]	3.09[6]	6.44[7]		0.01[6]	2.09[6]	4.03[6]	8.00		0.06[6]	1.53[7]	2.73	5.24		0.49[7]	2.63	4.42	8.33	11.65		1.03	3.91	6.52	12.09	16.58
	24				0.79[3]	3.38[6]			0.40[3]	1.80[3]	4.95[6]			0.70[3]	2.59[6]	6.37[6]			0.61[6]	1.81[6]	4.31			1.41[6]	3.16[7]	6.99	10.41			2.43[7]	5.06	10.53	14.94

35 psf Lateral Load

Wall	Spacing	350S162-(mils)				362S137-(mils)				362S162-(mils)				362S200-(mils)				400S137-(mils)				400S162-(mils)				400S200-(mils)				550S162-(mils)			
Height	(in)	33 ksi		50 ksi		33 ksi		50 ksi		33 ksi		50 ksi		33 ksi		50 ksi		33 ksi		50 ksi		33 ksi		50 ksi		33 ksi		50 ksi		33 ksi		50 ksi	
(ft)	o.c.	(33)	(43)	(54)	(68)	(33)	(43)	(54)	(68)	(33)	(43)	(54)	(68)	(33)	(43)	(54)	(68)	(33)	(43)	(54)	(68)	(33)	(43)	(54)	(68)	(33)	(43)	(54)	(68)	(33)	(43)	(54)	(68)
8	12	0.60[7]	1.30	2.81	3.90	0.40[7]	0.98	2.27	3.27	0.67[7]	1.40	2.99	4.19	0.93	1.92	3.85	5.38	0.56	1.21	2.66	3.89	0.87	1.68	3.49	4.99	1.16	2.26	4.48	6.34	1.49	2.54	4.83	6.68
	16	0.20[6]	0.87[7]	2.41	3.49	0.03[6]	0.59[6]	1.91[7]	2.88	0.27[6]	0.98[7]	2.59	3.77	0.49[7]	1.45	3.39	4.92	0.20[6]	0.83	2.29	3.50	0.47[7]	1.26	3.09	4.57	0.72	1.80	4.02	5.88	1.16	2.23	4.53	6.38
	24		0.11[6]	1.68[6]	2.73[7]			1.24[6]	2.17[6]		0.20[6]	1.85[6]	2.99[7]		0.60[6]	2.54[7]	4.06		0.11[6]	1.62[6]	2.77		0.49[6]	2.34[7]	3.76		0.95[7]	3.15	5.00	0.52	1.63	3.94	5.80
9	12	0.26[6]	0.89[6]	2.28[7]	3.27	0.10[6]	0.63[6]	1.84[7]	2.74	0.33[6]	0.99[7]	2.47	3.55	0.54[6]	1.44	3.20	4.60	0.25[6]	0.86[7]	2.24	3.42	0.52[7]	1.28	2.99	4.38	0.77[7]	1.79	3.84	5.60	1.20	2.25	4.53	6.40
	16		0.42[6]	1.83[6]	2.80[7]		0.19[6]	1.43[6]	2.30[7]		0.52[6]	2.02[6]	3.07[7]	0.05[6]	0.92[6]	2.68[7]	4.07		0.42[6]	1.82[7]	2.95	0.07[6]	0.79[6]	2.52	3.87	0.27[6]	1.26[7]	3.31	5.04	0.80	1.87	4.15	6.02
	24			1.04[3]	1.96[6]			0.68[3]	1.50[6]			1.20[6]	2.21[6]			1.73[6]	3.12[6]			1.05[6]	2.09[6]			1.66[6]	2.94[6]		0.30[6]	2.32[6]	4.03[7]	0.03[7]	1.13	3.41	5.28
10	12		0.51[6]	1.77[6]	2.65[7]		0.29[6]	1.42[6]	2.22[6]	0.01[3]	0.60[6]	1.96[6]	2.92[7]	0.18[6]	0.99[6]	2.57[7]	3.83		0.51[6]	1.82[7]	2.87	0.19[6]	0.88[6]	2.47[7]	3.73	0.39[6]	1.33[7]	3.20	4.81	0.89	1.93	4.14	6.06
	16		0.01[3]	1.30[6]	2.15[6]			0.97[6]	1.74[6]		0.10[3]	1.47[6]	2.40[6]		0.43[6]	2.01[6]	3.26[7]		0.02[6]	1.35[6]	2.35[6]		0.35[6]	1.95[6]	3.17[7]		0.74[6]	2.61[7]	4.20	0.42[7]	1.48	3.69	5.59
	24			0.47[3]	1.27[3]			0.19[3]	0.90[3]			0.61[3]	1.48[3]			1.02[3]	2.24[6]			0.51[3]	1.42[6]			1.02[3]	2.15[6]			1.54[6]	3.08[6]		0.61[7]	2.82	4.69
12	12			0.91[3]	1.58[6]			0.68[3]	1.28[3]			1.06[3]	1.78[6]		0.21[3]	1.46[6]	2.44[6]			1.02[3]	1.82[6]		0.16[3]	1.49[6]	2.47[6]		0.49[6]	2.01[6]	3.30[6]	0.25[6]	1.24[7]	3.27	5.04
	16			0.45[2]	1.07[3]			0.22[2]	0.79[3]			0.56[3]	1.25[3]			0.90[3]	1.86[3]			0.50[3]	1.26[3]			0.93[3]	1.86[6]			1.37[6]	2.63[6]		0.66[6]	2.68[7]	4.41
	24				0.21[2]								0.34[2]				0.85[2]				0.28[2]				0.79[3]			0.26[3]	1.45[3]			1.59[6]	3.26[6]
14	12			0.32[2]	0.82[2]			0.15[2]	0.60[2]			0.41[2]	0.96[3]			0.67[3]	1.43[3]			0.38[2]	0.98[3]			0.72[3]	1.44[3]			1.07[3]	2.05[6]		0.56[6]	2.35[6]	3.91[7]
	16				0.34[2]				0.13[2]				0.45[2]			0.13[2]	0.87[2]				0.43[2]			0.17[2]	0.85[2]			0.44[2]	1.40[3]			1.67[6]	3.18[6]
	24																												0.28[2]			0.47[3]	1.88[3]
16	12				0.30[2]				0.14[2]				0.39[2]			0.14[2]	0.73[2]				0.38[2]			0.18[2]	0.72[2]			0.40[2]	1.16[3]			1.50[6]	2.82[6]
	16																0.22[2]								0.17[2]				0.55[2]			0.79[3]	2.05[3]
	24																																0.72[2]

[1] Deflection exceeds L/120
[2] Deflection exceeds L/240
[3] Deflection exceeds L/360
[6] Deflection exceeds L/600
[7] Deflection exceeds L/720
– If not noted, deflection is less than L/720.

35 psf Lateral Load

Wall	Spacing	600S137-(mils)					600S162-(mils)					600S200-(mils)					800S137-(mils)					800S162-(mils)						800S200-(mils)					
Height	(in)	33 ksi		50 ksi			33 ksi		50 ksi			33 ksi		50 ksi			33 ksi		50 ksi			33 ksi		50 ksi				33 ksi		50 ksi			
(ft)	o.c.	(33)	(43)	(54)	(68)	(97)	(33)	(43)	(54)	(68)	(97)	(33)	(43)	(54)	(68)	(97)	(33)	(43)	(54)	(68)	(97)	(33)	(43)	(54)	(68)	(97)	(118)	(33)	(43)	(54)	(68)	(97)	(118)
8	12	1.08	1.84	3.24	4.49	7.06	1.60	2.65	4.90	6.76	10.72	2.01	3.41	6.56	9.13	14.81	1.22	1.96	3.19	4.38	6.87	1.81	2.79	4.92	6.75	10.77	13.88	2.34	3.82	7.10	9.70	15.42	19.91
	16	0.82	1.58	3.02	4.28	6.88	1.30	2.36	4.64	6.50	10.47	1.70	3.07	6.22	8.81	14.49	1.03	1.78	3.04	4.24	6.74	1.58	2.58	4.73	6.56	10.58	13.72	2.10	3.57	6.85	9.47	15.20	19.70
	24	0.32	1.09	2.60	3.86	6.52	0.70	1.81	4.11	5.99	9.96	1.07	2.41	5.55	8.18	13.85	0.66	1.42	2.75	3.96	6.47	1.14	2.15	4.34	6.18	10.21	13.39	1.62	3.07	6.36	9.02	14.77	19.27
9	12	0.87	1.62	3.05	4.30	6.90	1.34	2.40	4.66	6.52	10.48	1.73	3.09	6.17	8.72	14.30	1.06	1.81	3.06	4.26	6.76	1.62	2.61	4.76	6.59	10.61	13.74	2.14	3.61	6.89	9.50	15.23	19.72
	16	0.55	1.30	2.78	4.03	6.66	0.96	2.05	4.32	6.19	10.15	1.34	2.67	5.74	8.31	13.89	0.83	1.58	2.88	4.08	6.59	1.34	2.34	4.51	6.34	10.37	13.53	1.83	3.29	6.57	9.21	14.95	19.44
	24		0.69	2.24	3.50	6.19	0.24	1.36	3.66	5.53	9.49	0.58	1.85	4.90	7.52	13.07	0.36	1.13	2.51	3.73	6.25	0.78	1.80	4.01	5.86	9.89	13.11	1.23	2.66	5.94	8.63	14.39	18.90
10	12	0.63	1.38	2.84	4.08	6.70	1.06	2.13	4.38	6.24	10.19	1.42	2.73	5.71	8.23	13.69	0.89	1.64	2.92	4.13	6.63	1.42	2.41	4.57	6.40	10.42	13.57	1.91	3.37	6.64	9.27	15.00	19.50
	16	0.25	1.00	2.50	3.75	6.41	0.61	1.70	3.96	5.82	9.77	0.95	2.23	5.19	7.73	13.18	0.60	1.36	2.69	3.90	6.42	1.07	2.08	4.26	6.10	10.12	13.31	1.54	2.97	6.25	8.91	14.65	19.15
	24		0.27[7]	1.84	3.09	5.82		0.88	3.15	5.01	8.95	0.06[7]	1.26	4.19	6.77	12.18	0.03	0.81	2.24	3.46	6.00	0.40	1.42	3.65	5.50	9.52	12.78	0.81	2.20	5.47	8.19	13.96	18.46
12	12	0.13[6]	0.85	2.33	3.56	6.22	0.44[7]	1.49	3.68	5.55	9.45	0.76	1.94	4.67	7.07	12.18	0.50	1.26	2.60	3.81	6.32	0.95	1.94	4.12	5.95	9.96	13.16	1.40	2.81	6.05	8.72	14.45	18.94
	16		0.34[6]	1.86[7]	3.09	5.78		0.92[7]	3.10	4.96	8.83	0.16[6]	1.28	3.98	6.39	11.45	0.10	0.86	2.27	3.49	6.01	0.47	1.47	3.67	5.51	9.52	12.77	0.88	2.25	5.48	8.19	13.92	18.41
	24			0.98[6]	2.18[6]	4.95			2.03[6]	3.84[7]	7.65		0.06[6]	2.70[7]	5.11	10.08		0.10	1.62	2.86	5.40		0.56	2.81	4.65	8.65	11.99	0.00	1.18	4.38	7.15	12.90	17.38
14	12		0.28[6]	1.75[6]	2.95	5.61		0.81[6]	2.80[7]	4.53	8.45	0.10[6]	1.13[7]	3.55	5.75	10.36	0.07[7]	0.81	2.21	3.42	5.94	0.42	1.40	3.58	5.40	9.39	12.64	0.81	2.14	5.26	7.97	13.73	18.19
	16			1.16[6]	2.33[6]	5.02		0.14[6]	2.11[6]	3.80[7]	7.62		0.35[6]	2.74[6]	4.93	9.45		0.30[7]	1.77	2.99	5.51		0.79	2.98	4.80	8.77	12.08	0.15[7]	1.42	4.51	7.25	12.99	17.44
	24			0.10[3]	1.21[6]	3.93[6]			0.86[3]	2.47[6]	6.11[6]			1.28[6]	3.44[6]	7.80[7]			0.92[6]	2.15	4.68			1.85[7]	3.65	7.58	11.00		0.08[7]	3.10	5.87	11.58	16.00
16	12			1.15[6]	2.27[6]	4.88[7]		0.17[6]	1.93[6]	3.45[6]	6.85		0.38[6]	2.47[6]	4.43[7]	8.45		0.33[7]	1.77	2.98	5.48		0.81[7]	2.96	4.75	8.68	11.97	0.19[7]	1.40	4.30	6.91	12.50	17.01
	16			0.47[3]	1.54[6]	4.15[6]			1.18[3]	2.64[6]	5.92[6]			1.60[6]	3.52[6]	7.44[7]			1.21[6]	2.42	4.93		0.07[6]	2.21[7]	3.99	7.87	11.23		0.55[7]	3.40	6.02	11.56	16.02
	24				0.26[3]	2.85[3]				1.22[3]	4.28[6]			0.08[3]	1.94[3]	5.64[6]			0.18[6]	1.37[6]	3.86[7]			0.84[6]	2.57[6]	6.36	9.82			1.75[6]	4.37[7]	9.79	14.16

40 psf Lateral Load

Wall	Spacing	350S162-(mils)				362S137-(mils)				362S162-(mils)				362S200-(mils)				400S137-(mils)				400S162-(mils)				400S200-(mils)				550S162-(mils)			
Height	(in)	33 ksi		50 ksi		33 ksi		50 ksi		33 ksi		50 ksi		33 ksi		50 ksi		33 ksi		50 ksi		33 ksi		50 ksi		33 ksi		50 ksi		33 ksi		50 ksi	
(ft)	o.c.	(33)	(43)	(54)	(68)	(33)	(43)	(54)	(68)	(33)	(43)	(54)	(68)	(33)	(43)	(54)	(68)	(33)	(43)	(54)	(68)	(33)	(43)	(54)	(68)	(33)	(43)	(54)	(68)	(33)	(43)	(54)	(68)
8	12	0.43[6]	1.11[7]	2.64	3.72	0.24[6]	0.81[7]	2.11	3.10	0.50[7]	1.21	2.82	4.01	0.74[7]	1.71	3.65	5.18	0.40[7]	1.04	2.50	3.72	0.70	1.50	3.32	4.81	0.97	2.06	4.28	6.14	1.35	2.41	4.70	6.55
	16		0.65[6]	2.20[7]	3.26		0.38[6]	1.71[7]	2.67	0.06[6]	0.75[6]	2.37[7]	3.54	0.25[6]	1.20[7]	3.14	4.67		0.62[7]	2.10	3.28	0.26[6]	1.03	2.87	4.33	0.49[7]	1.55	3.76	5.62	0.98	2.06	4.36	6.21
	24			1.39[6]	2.42[6]			0.97[6]	1.88[6]			1.56[6]	2.68[6]		0.26[6]	2.19[6]	3.72[7]			1.35[6]	2.47[7]		0.18[6]	2.04[7]	3.44		0.61[6]	2.80[7]	4.64	0.26	1.37	3.69	5.56
9	12	0.07[6]	0.69[6]	2.08[7]	3.06		0.44[6]	1.66[6]	2.55[7]	0.13[6]	0.78[6]	2.27[7]	3.34	0.32[6]	1.21[7]	2.97	4.37	0.07[6]	0.67[6]	2.06	3.21	0.33[6]	1.07[7]	2.78	4.16	0.55[7]	1.56	3.61	5.35	1.03	2.09	4.36	6.23
	16		0.17[6]	1.60[6]	2.55[6]			1.21[6]	2.07[6]		0.26[6]	1.77[6]	2.82[7]		0.64[6]	2.40[6]	3.79		0.18[6]	1.59[6]	2.70[7]		0.53[6]	2.26[7]	3.60		0.98[7]	3.01	4.74	0.57	1.65	3.93	5.80
	24			0.72[3]	1.63[6]			0.39[3]	1.19[3]			0.87[3]	1.86[6]			1.36[6]	2.73[6]			0.74[6]	1.75[6]			1.32[6]	2.57[6]			1.93[6]	3.62[7]		0.82	3.11	4.98
10	12		0.29[6]	1.56[6]	2.43[6]		0.09[3]	1.22[6]	2.01[6]		0.38[6]	1.74[6]	2.69[7]		0.74[6]	2.32[6]	3.58[7]		0.30[6]	1.61[6]	2.65[7]		0.64[6]	2.24[7]	3.48	0.15[6]	1.07[6]	2.94	4.54	0.69	1.74	3.94	5.85
	16			1.05[3]	1.89[6]			0.74[3]	1.49[6]			1.21[6]	2.12[6]		0.13[3]	1.71[6]	2.95[6]			1.09[6]	2.07[6]		0.06[6]	1.67[6]	2.86[6]		0.43[6]	2.29[6]	3.86[7]	0.16[7]	1.22	3.43	5.33
	24			0.15[2]	0.93[3]				0.57[3]			0.27[3]	1.12[3]			0.64[3]	1.85[3]			0.18[3]	1.05[3]			0.66[3]	1.75[6]			1.13[6]	2.64[6]		0.26[6]	2.46[7]	4.32
12	12			0.70[3]	1.35[3]			0.48[3]	1.06[3]			0.84[3]	1.55[3]			1.21[3]	2.19[6]			0.79[3]	1.58[6]			1.25[3]	2.20[6]		0.20[3]	1.73[6]	3.00[6]		0.99[7]	3.01	4.76
	16			0.20[2]	0.81[3]				0.54[2]			0.30[2]	0.97[3]			0.60[3]	1.55[3]			0.23[2]	0.96[3]			0.64[3]	1.53[3]			1.03[3]	2.27[6]		0.34[6]	2.35[6]	4.07[7]
	24																0.45[2]								0.38[2]				1.00[3]			1.16[6]	2.80[6]
14	12			0.13[2]	0.60[2]				0.39[2]			0.21[2]	0.73[2]			0.43[2]	1.18[3]			0.16[2]	0.73[2]			0.48[2]	1.18[3]			0.79[3]	1.76[3]		0.26[6]	2.05[6]	3.59[6]
	16				0.09[2]								0.19[2]				0.58[2]				0.14[2]				0.55[2]			0.12[2]	1.06[3]			1.31[3]	2.79[6]
	24																																1.38[3]
16	12				0.11[2]								0.19[2]				0.50[2]				0.15[2]				0.48[2]			0.14[2]	0.89[2]			1.19[3]	2.48[6]
	16																												0.24[2]			0.42[2]	1.64[3]
	24																																0.20[2]

40 psf Lateral Load

Wall	Spacing	600S137-(mils)					600S162-(mils)					600S200-(mils)					800S137-(mils)					800S162-(mils)						800S200-(mils)					
Height	(in)	33 ksi		50 ksi			33 ksi		50 ksi			33 ksi		50 ksi			33 ksi		50 ksi			33 ksi		50 ksi				33 ksi		50 ksi			
(ft)	o.c.	(33)	(43)	(54)	(68)	(97)	(33)	(43)	(54)	(68)	(97)	(33)	(43)	(54)	(68)	(97)	(33)	(43)	(54)	(68)	(97)	(33)	(43)	(54)	(68)	(97)	(118)	(33)	(43)	(54)	(68)	(97)	(118)
8	12	0.97	1.73	3.15	4.40	6.99	1.47	2.53	4.79	6.65	10.61	1.88	3.27	6.42	9.00	14.67	1.14	1.88	3.12	4.32	6.81	1.71	2.70	4.84	6.67	10.69	13.81	2.23	3.71	6.99	9.60	15.33	19.82
	16	0.68	1.44	2.90	4.16	6.78	1.12	2.20	4.48	6.35	10.32	1.52	2.88	6.03	8.63	14.30	0.92	1.67	2.95	4.16	6.66	1.46	2.45	4.62	6.45	10.48	13.62	1.96	3.42	6.71	9.34	15.08	19.58
	24	0.11	0.88	2.41	3.68	6.36	0.45	1.58	3.89	5.77	9.74	0.81	2.13	5.27	7.92	13.58	0.50	1.26	2.62	3.84	6.36	0.95	1.97	4.17	6.02	10.05	13.25	1.41	2.85	6.15	8.83	14.59	19.09
9	12	0.73	1.48	2.93	4.18	6.80	1.18	2.25	4.51	6.38	10.34	1.56	2.91	5.98	8.54	14.12	0.96	1.71	2.98	4.18	6.68	1.50	2.50	4.65	6.48	10.51	13.65	2.01	3.47	6.75	9.38	15.11	19.60
	16	0.37	1.13	2.62	3.88	6.53	0.75	1.85	4.13	6.00	9.96	1.12	2.43	5.49	8.08	13.65	0.69	1.45	2.77	3.98	6.49	1.18	2.19	4.37	6.20	10.23	13.41	1.66	3.11	6.39	9.05	14.79	19.29
	24		0.43	2.01	3.27	6.00		1.07	3.38	5.25	9.22	0.27	1.51	4.55	7.18	12.73	0.16	0.94	2.35	3.57	6.11	0.55	1.57	3.80	5.65	9.69	12.93	0.98	2.39	5.67	8.39	14.16	18.66
10	12	0.47	1.22	2.69	3.94	6.58	0.86	1.94	4.20	6.06	10.01	1.22	2.51	5.49	8.01	13.47	0.77	1.52	2.83	4.03	6.54	1.27	2.27	4.43	6.27	10.29	13.46	1.75	3.20	6.47	9.12	14.85	19.35
	16	0.04[7]	0.78	2.31	3.56	6.24	0.36	1.46	3.73	5.59	9.53	0.69	1.94	4.90	7.45	12.89	0.44	1.20	2.56	3.78	6.30	0.88	1.89	4.08	5.92	9.95	13.16	1.33	2.75	6.02	8.70	14.45	18.95
	24			1.57[7]	2.82	5.58		0.54[7]	2.82	4.68	8.61		0.86	3.78	6.37	11.76		0.58	2.04	3.28	5.82	0.11	1.14	3.39	5.24	9.27	12.56	0.51	1.88	5.14	7.89	13.66	18.16
12	12		0.63[7]	2.13	3.36	6.03	0.19[6]	1.24	3.43	5.30	9.18	0.50[7]	1.66	4.37	6.77	11.86	0.33	1.09	2.46	3.67	6.19	0.74	1.74	3.93	5.76	9.77	12.99	1.17	2.57	5.81	8.49	14.22	18.71
	16		0.06[6]	1.60[7]	2.82	5.54		0.61[6]	2.78[7]	4.63	8.48		0.92[7]	3.60	6.01	11.05		0.64	2.08	3.30	5.84	0.20	1.21	3.42	5.26	9.27	12.55	0.59	1.94	5.16	7.89	13.63	18.11
	24			0.63[6]	1.82[6]	4.60[7]			1.59[6]	3.39[6]	7.17			2.19[6]	4.60[7]	9.52			1.35	2.59	5.14		0.18	2.44	4.29	8.28	11.66		0.74	3.92	6.72	12.46	16.94
14	12		0.01[6]	1.50[6]	2.68[7]	5.35		0.52[6]	2.49[6]	4.21	8.09		0.79[6]	3.19[7]	5.39	9.97		0.59	2.02	3.24	5.76	0.15[7]	1.14	3.32	5.14	9.12	12.40	0.52	1.83	4.94	7.66	13.41	17.87
	16			0.84[6]	2.00[6]	4.70[7]			1.74[6]	3.41[6]	7.17			2.30[6]	4.48[7]	8.96		0.01[7]	1.52	2.74	5.27		0.45[7]	2.65	4.47	8.42	11.77		1.03	4.10	6.85	12.58	17.02
	24				0.77[3]	3.49[6]			0.38[3]	1.95[6]	5.51[6]			0.71[3]	2.85[6]	7.15[6]			0.57[6]	1.80[7]	4.34			1.39[6]	3.18	7.09	10.55			2.52[7]	5.31	10.99	15.40
16	12			0.85[3]	1.95[6]	4.56[6]			1.60[6]	3.09[6]	6.44[7]		0.01[6]	2.09[6]	4.03[6]	8.00		0.06[6]	1.53[7]	2.73	5.24		0.49[7]	2.63	4.42	8.33	11.65		1.03	3.91	6.52	12.09	16.58
	16			0.10[3]	1.16[3]	3.76[6]			0.78[3]	2.21[6]	5.42[6]			1.14[3]	3.04[6]	6.89[6]			0.91[6]	2.11[7]	4.62			1.81[6]	3.57	7.43	10.82		0.09[6]	2.91[7]	5.53	11.04	15.48
	24					2.34[3]				0.67[3]	3.64[3]				1.32[3]	4.94[6]				0.94[6]	3.43[6]			0.29[6]	2.00[6]	5.74[7]	9.24			1.09[6]	3.71[6]	9.07	13.40

[1] Deflection exceeds L/120
[2] Deflection exceeds L/240
[3] Deflection exceeds L/360
[6] Deflection exceeds L/600
[7] Deflection exceeds L/720
– If not noted, deflection is less than L/720.

See Combined Axial and Lateral Load Table Notes on page 23.

Complies with 2009 & 2012 International Building Code (IBC)

50 psf Lateral Load

Wall	Spacing	350S162-(mils)				362S137-(mils)				362S162-(mils)				362S200-(mils)				400S137-(mils)				400S162-(mils)				400S200-(mils)				550S162-(mils)			
Height	(in)	33 ksi		50 ksi		33 ksi		50 ksi		33 ksi		50 ksi		33 ksi		50 ksi		33 ksi		50 ksi		33 ksi		50 ksi		33 ksi		50 ksi		33 ksi		50 ksi	
(ft)	o.c.	(33)	(43)	(54)	(68)	(33)	(43)	(54)	(68)	(33)	(43)	(54)	(68)	(33)	(43)	(54)	(68)	(33)	(43)	(54)	(68)	(33)	(43)	(54)	(68)	(33)	(43)	(54)	(68)	(33)	(43)	(54)	(68)
8	12	0.09[6]	0.76[6]	2.30[7]	3.38		0.49[6]	1.81[7]	2.78	0.16[6]	0.86[7]	2.48	3.66	0.37[6]	1.33	3.26	4.79	0.10[6]	0.72[7]	2.19	3.39	0.37[7]	1.15	2.98	4.45	0.60[7]	1.67	3.89	5.75	1.07	2.14	4.44	6.30
	16		0.21[6]	1.78[6]	2.83[7]			1.33[6]	2.27[7]		0.31[6]	1.96[6]	3.10[7]		0.72[6]	2.65[7]	4.18		0.21[6]	1.71[7]	2.87		0.59[6]	2.45	3.87	0.03[6]	1.07[7]	3.27	5.12	0.61	1.71	4.02	5.88
	24			0.83[3]	1.84[6]			0.46[3]	1.33[6]			0.99[6]	2.08[6]			1.54[6]	3.06[6]			0.82[6]	1.90[6]			1.46[6]	2.81[6]			2.13[6]	3.95[7]		0.88	3.21	5.08
9	12		0.29[6]	1.71[6]	2.68[7]		0.07[6]	1.32[6]	2.18[6]		0.39[6]	1.89[6]	2.94[7]		0.78[6]	2.54[7]	3.93		0.29[6]	1.70[6]	2.82[7]		0.66[6]	2.39[7]	3.73	0.14[6]	1.12[7]	3.16	4.89	0.69	1.76	4.04	5.91
	16			1.14[6]	2.07[6]			0.78[3]	1.61[6]			1.31[6]	2.32[6]		0.11[6]	1.86[6]	3.25[6]			1.15[6]	2.21[6]		0.04[6]	1.78[6]	3.07[7]		0.43[6]	2.46[6]	4.17	0.14[7]	1.23	3.52	5.39
	24			0.14[3]	1.00[3]				0.60[3]			0.27[3]	1.21[3]			0.67[3]	2.02[6]			0.15[3]	1.10[3]			0.68[3]	1.87[6]			1.19[6]	2.84[6]		0.23[6]	2.52[7]	4.38
10	12			1.17[6]	2.02[6]			0.85[3]	1.61[6]			1.34[6]	2.26[6]		0.27[6]	1.86[6]	3.11[6]			1.22[6]	2.21[6]		0.20[6]	1.81[6]	3.01[7]		0.58[6]	2.45[6]	4.03[7]	0.29[7]	1.35	3.56	5.46
	16			0.58[3]	1.39[3]			0.29[3]	1.01[3]			0.72[3]	1.61[6]			1.15[3]	2.38[6]			0.62[3]	1.55[6]			1.14[6]	2.29[6]			1.69[6]	3.23[6]		0.73[7]	2.94	4.82
	24				0.29[2]								0.45[3]				1.10[3]				0.37[3]				1.00[3]			0.35[3]	1.82[3]			1.78[6]	3.61[7]
12	12			0.32[2]	0.94[3]			0.10[2]	0.66[3]			0.43[2]	1.11[3]			0.75[3]	1.70[3]			0.37[3]	1.11[3]			0.78[3]	1.70[3]			1.20[3]	2.45[6]		0.50[6]	2.51[7]	4.24
	16				0.32[2]				0.06[2]				0.46[2]			0.05[2]	0.98[3]				0.41[2]			0.09[2]	0.94[3]			0.41[3]	1.61[3]			1.74[6]	3.42[6]
	24																												0.16[2]			0.34[3]	1.93[6]
14	12				0.21[2]				0.01[2]				0.32[2]				0.72[2]				0.28[2]			0.03[2]	0.70[2]			0.28[2]	1.23[3]			1.49[6]	2.98[6]
	16																0.05[2]												0.43[2]			0.63[3]	2.06[3]
	24																																0.43[2]
16	12																0.08[2]								0.02[2]				0.39[2]			0.60[3]	1.84[3]
	16																																0.89[2]
	24																																

50 psf Lateral Load

Wall	Spacing	600S137-(mils)					600S162-(mils)					600S200-(mils)					800S137-(mils)					800S162-(mils)						800S200-(mils)					
Height	(in)	33 ksi		50 ksi			33 ksi		50 ksi			33 ksi		50 ksi			33 ksi		50 ksi			33 ksi		50 ksi				33 ksi		50 ksi			
(ft)	o.c.	(33)	(43)	(54)	(68)	(97)	(33)	(43)	(54)	(68)	(97)	(33)	(43)	(54)	(68)	(97)	(33)	(43)	(54)	(68)	(97)	(33)	(43)	(54)	(68)	(97)	(118)	(33)	(43)	(54)	(68)	(97)	(118)
8	12	0.75	1.51	2.96	4.22	6.83	1.21	2.28	4.56	6.43	10.39	1.60	2.98	6.12	8.72	14.40	0.98	1.72	3.00	4.20	6.70	1.52	2.52	4.67	6.51	10.53	13.67	2.03	3.49	6.78	9.41	15.14	19.64
	16	0.39	1.16	2.66	3.92	6.57	0.78	1.89	4.18	6.06	10.03	1.16	2.50	5.64	8.27	13.94	0.71	1.47	2.79	4.00	6.51	1.20	2.21	4.39	6.23	10.26	13.44	1.69	3.14	6.43	9.09	14.83	19.33
	24		0.46	2.06	3.32	6.05		1.12	3.45	5.34	9.31	0.30	1.58	4.71	7.39	13.05	0.18	0.96	2.37	3.60	6.13	0.58	1.61	3.84	5.69	9.73	12.97	1.01	2.43	5.73	8.45	14.22	18.73
9	12	0.46	1.21	2.70	3.95	6.59	0.86	1.95	4.22	6.09	10.05	1.23	2.55	5.61	8.19	13.77	0.76	1.51	2.82	4.03	6.54	1.26	2.26	4.44	6.27	10.30	13.47	1.75	3.20	6.48	9.13	14.87	19.37
	16	0.02[7]	0.78	2.31	3.57	6.26	0.34	1.46	3.75	5.62	9.58	0.68	1.97	5.02	7.63	13.19	0.42	1.19	2.56	3.78	6.30	0.86	1.88	4.08	5.93	9.96	13.17	1.32	2.75	6.03	8.72	14.47	18.97
	24			1.57	2.83	5.60		0.52[7]	2.83	4.71	8.67		0.85	3.87	6.53	12.06		0.56	2.04	3.27	5.82	0.09	1.12	3.38	5.24	9.28	12.57	0.48	1.86	5.15	7.90	13.69	18.20
10	12	0.14[7]	0.89	2.40	3.65	6.32	0.48	1.58	3.84	5.71	9.65	0.82	2.08	5.05	7.59	13.03	0.52	1.28	2.63	3.84	6.36	0.97	1.98	4.17	6.01	10.03	13.23	1.43	2.86	6.13	8.81	14.55	19.05
	16		0.37[7]	1.93	3.18	5.91		0.99	3.27	5.13	9.07	0.19[7]	1.39	4.33	6.90	12.32	0.11	0.89	2.30	3.53	6.06	0.49	1.51	3.73	5.58	9.61	12.86	0.91	2.31	5.58	8.30	14.06	18.56
	24			1.04[6]	2.29[7]	5.10			2.17[7]	4.02	7.94		0.10[7]	2.99	5.59	10.94		0.12	1.66	2.90	5.46		0.59	2.88	4.74	8.77	12.11		1.24	4.50	7.29	13.07	17.58
12	12		0.20[6]	1.73[7]	2.95	5.66		0.76[7]	2.94	4.79	8.66		1.10[7]	3.79	6.20	11.25		0.75	2.17	3.40	5.92	0.33	1.34	3.55	5.38	9.39	12.66	0.73	2.10	5.32	8.04	13.78	18.26
	16			1.10[6]	2.31[7]	5.07		0.01[6]	2.17[6]	3.99[7]	7.81		0.23[6]	2.88[7]	5.29	10.27		0.20	1.71	2.94	5.49		0.69	2.93	4.77	8.77	12.10	0.02	1.33	4.53	7.30	13.04	17.52
	24				1.11[6]	3.94[6]			0.77[6]	2.52[6]	6.24[7]			1.21[6]	3.62[6]	8.45			0.82[7]	2.07	4.63			1.74	3.58	7.56	11.01			3.03	5.87	11.61	16.08
14	12			1.00[6]	2.16[6]	4.86[7]			1.92[6]	3.60[6]	7.39		0.14[6]	2.52[6]	4.70[7]	9.21		0.16[7]	1.64	2.87	5.39		0.62	2.81	4.63	8.60	11.92		1.22	4.30	7.05	12.79	17.23
	16			0.24[3]	1.36[6]	4.08[6]			1.03[3]	2.65[6]	6.32[6]			1.48[6]	3.64[6]	8.03[7]			1.04[7]	2.27	4.80			2.01[7]	3.81	7.75	11.15		0.26[7]	3.29	6.07	11.77	16.20
	24					2.66[3]				0.97[3]	4.39[6]				1.75[3]	5.91[6]				1.12[6]	3.66[7]			0.50[6]	2.27[6]	6.13	9.67			1.41[6]	4.22[7]	9.85	14.23
16	12			0.28[3]	1.35[3]	3.95[6]			0.98[3]	2.42[6]	5.67[6]			1.37[6]	3.28[6]	7.16[7]			1.06[6]	2.27[7]	4.77			2.01[7]	3.78	7.65	11.02		0.32[6]	3.15	5.77	11.30	15.75
	16				0.44[3]	3.02[3]			0.04[2]	1.41[3]	4.50[6]			0.28[3]	2.15[3]	5.88[6]			0.32[6]	1.52[6]	4.01[7]			1.03[6]	2.76[6]	6.57	10.01			1.97[6]	4.60[7]	10.03	14.42
	24					1.39[2]					2.47[3]				0.18[2]	3.64[3]				0.12[3]	2.58[6]				0.90[6]	4.56[6]	8.12[7]				2.45[6]	7.70[7]	11.95

[1] Deflection exceeds L/120
[2] Deflection exceeds L/240
[3] Deflection exceeds L/360
[6] Deflection exceeds L/600
[7] Deflection exceeds L/720
– If not noted, deflection is less than L/720.

Floor Joist Span Tables

10 psf Dead Load and 20 psf Live Load

Complies with 2009 & 2012 International Building Code (IBC)

Allowable Floor Joist Span Table Notes

1. Spans are based on continuous support of compression flange over the full length of the joist.
2. Spans are based on tension flange laterally braced at maximum spacing of 8'-0".
3. For two equal spans, the listed span is the distance from either end to the center support, with the joist continuous over the center support.
4. Joists must be braced against rotation at all supports.
5. End shear and web crippling capacity have not been reduced for punchouts.
6. End web crippling check is based on 3 ½" end bearing. Where listed allowable spans are followed by "e", web stiffeners are required at end supports.
7. Interior support not checked for combined bending and web crippling. Web stiffeners are required at interior supports.
8. Shear capacity at interior support has been reduced for the presence of punchouts adjacent to the supports. Combined bending and shear check is based on unreinforced web in accordance with section C3.3.1 of AISI S100.
9. Total load deflection limited to L/240. Live load deflection limit is as noted.
10. Alternate span live loading has been considered for two equal span conditions.
11. 11. See page 2 for additional table notes.

Span (ft)	Minimum Number of Rows
up to 16 ft.	1 row at mid-span
16 ft. to 24 ft.	2 rows at 1/3 points
24 ft. to 32 ft.	3 rows at 1/4 points

Bridging Recommendations

Bracing components shall be designed in accordance with section D3 of AISI S100. The minimum number of rows required is shown in the table. Additional rows of bridging may be required by design.

10 psf Dead Load and 20 psf Live Load													
Section	F_y	L/360 Live Load Deflection						L/480 Live Load Deflection					
		Single Span			Two Equal Spans			Single Span			Two Equal Spans		
		Spacing (in)			Spacing (in)			Spacing (in)			Spacing (in)		
	(ksi)	12	16	24	12	16	24	12	16	24	12	16	24
600S162-33	33	14' 6"	12' 7" e	10' 3" e	14' 6"	12' 7"	10' 1"	14' 4"	12' 7" e	10' 3" e	14' 6"	12' 7"	10' 1"
600S200-33	33	15' 6"	13' 5" e	10' 11" e	15' 6"	13' 3"	10' 5"	15' 0"	13' 5" e	10' 11" e	15' 6"	13' 3"	10' 5"
600S162-43	33	17' 2"	15' 6"	12' 8"	17' 11"	15' 6"	12' 8"	15' 7"	14' 2"	12' 5"	17' 6"	15' 6"	12' 8"
600S200-43	33	18' 0"	16' 0"	13' 1"	18' 6"	16' 0"	13' 1"	16' 5"	14' 11"	13' 0"	18' 5"	16' 0"	13' 1"
600S250-43	33	18' 11"	16' 5"	13' 5" e	19' 0"	16' 5"	13' 5"	17' 2"	15' 7"	13' 5" e	19' 0"	16' 5"	13' 5"
600S162-54	50	18' 5"	16' 9"	14' 7"	20' 8"	18' 9"	16' 5"	16' 9"	15' 2"	13' 3"	18' 9"	17' 1"	14' 11"
600S200-54	50	19' 4"	17' 7"	15' 4"	21' 9"	19' 9"	17' 3"	17' 7"	16' 0"	14' 0"	19' 9"	17' 11"	15' 8"
600S250-54	50	20' 3"	18' 5"	16' 1"	22' 9"	20' 8"	17' 10"	18' 5"	16' 9"	14' 8"	20' 8"	18' 10"	16' 5"
600S162-68	50	19' 9"	17' 11"	15' 8"	22' 2"	20' 2"	17' 7"	17' 11"	16' 4"	14' 3"	20' 2"	18' 4"	16' 0"
600S200-68	50	20' 9"	18' 10"	16' 6"	23' 4"	21' 2"	18' 6"	18' 10"	17' 2"	15' 0"	21' 2"	19' 3"	16' 10"
600S250-68	50	21' 9"	19' 9"	17' 3"	24' 5"	22' 3"	19' 5"	19' 9"	18' 0"	15' 8"	22' 3"	20' 2"	17' 8"
600S162-97	50	21' 11"	19' 11"	17' 4"	24' 7"	22' 4"	19' 6"	19' 11"	18' 1"	15' 9"	22' 4"	20' 3"	17' 9"
600S200-97	50	23' 1"	20' 11"	18' 4"	25' 11"	23' 6"	20' 7"	20' 11"	19' 0"	16' 8"	23' 6"	21' 4"	18' 8"
600S250-97	50	24' 3"	22' 0"	19' 3"	27' 2"	24' 8"	21' 7"	22' 0"	20' 0"	17' 6"	24' 8"	22' 5"	19' 7"
600S162-118	50	23' 1"	21' 0"	18' 4"	25' 11"	23' 7"	20' 7"	21' 0"	19' 1"	16' 8"	23' 7"	21' 5"	18' 9"
600S200-118	50	24' 5"	22' 2"	19' 4"	27' 5"	24' 11"	21' 9"	22' 2"	20' 2"	17' 7"	24' 11"	22' 7"	19' 9"
600S250-118	50	25' 8"	23' 4"	20' 4"	28' 9"	26' 2"	22' 10"	23' 4"	21' 2"	18' 6"	26' 2"	23' 9"	20' 9"
800S162-33	33	16' 9" e	14' 6" e	11' 10" e	15' 8" e	13' 0" e	9' 10" e	16' 9" e	14' 6" e	11' 10" e	15' 8" e	13' 0" e	9' 10" e
800S200-33	33	18' 0" e	15' 7" e	12' 8" e	16' 6" e	13' 8" e	10' 3" e	18' 0" e	15' 7" e	12' 8" e	16' 6" e	13' 8" e	10' 3" e
800S162-43	33	20' 2"	17' 6"	14' 3" e	20' 2"	17' 6"	13' 11"	19' 6"	17' 6"	14' 3" e	20' 2"	17' 6"	13' 11"
800S200-43	33	21' 7"	18' 8"	15' 3" e	21' 7"	18' 8"	15' 3"	20' 7"	18' 8"	15' 3" e	21' 7"	18' 8"	15' 3"
800S250-43	33	22' 2"	19' 2" e	15' 8" e	22' 2"	19' 2"	15' 6"	21' 5"	19' 2" e	15' 8" e	22' 2"	19' 2"	15' 6"
800S162-54	50	23' 3"	21' 1"	18' 4"	26' 0"	23' 5"	19' 1"	21' 1"	19' 2"	16' 9"	23' 8"	21' 6"	18' 9"
800S200-54	50	24' 4"	22' 1"	19' 4"	27' 4"	24' 10"	20' 5"	22' 1"	20' 1"	17' 6"	24' 10"	22' 6"	19' 8"
800S250-54	50	25' 4"	23' 1"	20' 2"	28' 6"	25' 6"	20' 10"	23' 1"	20' 11"	18' 3"	25' 10"	23' 6"	20' 6"
800S162-68	50	24' 11"	22' 8"	19' 9"	28' 0"	25' 5"	22' 3"	22' 8"	20' 7"	18' 0"	25' 5"	23' 1"	20' 2"
800S200-68	50	26' 1"	23' 9"	20' 9"	29' 4"	26' 8"	23' 3"	23' 9"	21' 7"	18' 10"	26' 8"	24' 2"	21' 2"
800S250-68	50	27' 3"	24' 9"	21' 8"	30' 7"	27' 10"	24' 3"	24' 9"	22' 6"	19' 8"	27' 10"	25' 3"	22' 1"
800S162-97	50	27' 8"	25' 2"	22' 0"	31' 1"	28' 3"	24' 8"	25' 2"	22' 10"	20' 0"	28' 3"	25' 8"	22' 5"
800S200-97	50	29' 0"	26' 5"	23' 1"	32' 7"	29' 7"	25' 11"	26' 5"	24' 0"	20' 11"	29' 7"	26' 11"	23' 6"
800S250-97	50	30' 4"	27' 7"	24' 1"	34' 1"	30' 11"	27' 1"	27' 7"	25' 1"	21' 11"	30' 11"	28' 2"	24' 7"
800S162-118	50	29' 4"	26' 7"	23' 3"	32' 11"	29' 11"	26' 1"	26' 7"	24' 2"	21' 1"	29' 11"	27' 2"	23' 9"
800S200-118	50	30' 9"	27' 11"	24' 5"	34' 6"	31' 5"	27' 5"	27' 11"	25' 5"	22' 2"	31' 5"	28' 6"	24' 11"
800S250-118	50	32' 2"	29' 3"	25' 6"	36' 1"	32' 10"	28' 8"	29' 3"	26' 7"	23' 2"	32' 10"	29' 10"	26' 1"
1000S162-43	33	22' 4" e	19' 4" e	15' 10" e	22' 3" e	18' 10" e	14' 8" e	22' 4" e	19' 4" e	15' 10" e	22' 3" e	18' 10" e	14' 8" e
1000S200-43	33	24' 1" e	20' 11" e	17' 1" e	23' 5" e	19' 9" e	15' 4" e	24' 1" e	20' 11" e	17' 1" e	23' 5" e	19' 9" e	15' 4" e
1000S250-43	33	24' 10" e	21' 6" e	17' 6" e	24' 5" e	20' 6" e	15' 10" e	24' 10" e	21' 6" e	17' 6" e	24' 5" e	20' 6" e	15' 10" e
1000S162-54	50	27' 7"	25' 0"	21' 2"	29' 11"	25' 11"	21' 2"	25' 2"	22' 10"	19' 11"	28' 2"	25' 6"	21' 2"
1000S200-54	50	28' 10"	26' 2"	22' 9"	32' 2"	27' 10"	22' 2"	26' 4"	23' 10"	20' 9"	29' 5"	26' 8"	22' 2"
1000S250-54	50	30' 3"	27' 6"	23' 4"	33' 1"	28' 8"	23' 1"	27' 6"	25' 0"	21' 10"	30' 10"	28' 1"	23' 1"
1000S162-68	50	30' 0"	27' 2"	23' 8"	33' 6"	30' 5"	25' 0"	27' 3"	24' 9"	21' 7"	30' 7"	27' 9"	24' 2"
1000S200-68	50	31' 3"	28' 5"	24' 9"	35' 0"	31' 9"	26' 9"	28' 5"	25' 10"	22' 7"	31' 11"	28' 11"	25' 3"
1000S250-68	50	32' 6"	29' 7"	25' 10"	36' 6"	33' 2"	27' 6"	29' 7"	26' 10"	23' 5"	33' 2"	30' 2"	26' 4"
1000S162-97	50	33' 4"	30' 4"	26' 6"	37' 5"	34' 0"	29' 9"	30' 4"	27' 6"	24' 1"	34' 0"	30' 11"	27' 0"
1000S200-97	50	34' 10"	31' 8"	27' 8"	39' 1"	35' 6"	31' 0"	31' 8"	28' 9"	25' 1"	35' 6"	32' 3"	28' 2"
1000S250-97	50	36' 3"	32' 11"	28' 9"	40' 9"	37' 0"	32' 4"	32' 11"	29' 11"	26' 2"	37' 0"	33' 7"	29' 4"
1000S162-118	50	35' 4"	32' 1"	28' 0"	39' 8"	36' 0"	31' 6"	32' 1"	29' 2"	25' 6"	36' 0"	32' 9"	28' 7"
1000S200-118	50	36' 11"	33' 7"	29' 4"	41' 6"	37' 8"	32' 11"	33' 7"	30' 6"	26' 8"	37' 8"	34' 3"	29' 11"
1000S250-118	50	38' 6"	35' 0"	30' 7"	43' 2"	39' 3"	34' 4"	35' 0"	31' 9"	27' 9"	39' 3"	35' 8"	31' 2"

" e " Requires web stiffeners at end supports

Web stiffeners required at all interior supports for 2-span conditions.

Floor Joist Span Tables

See Allowable Floor Joist Span Table Notes on page 29.

10 psf Dead Load and 20 psf Live Load

Complies with 2009 & 2012 International Building Code (IBC)

10 psf Dead Load and 20 psf Live Load													
Member	F_y	L/360 Live Load Deflection						L/480 Live Load Deflection					
		Single Span			Two Equal Spans			Single Span			Two Equal Spans		
		Spacing (in)			Spacing (in)			Spacing (in)			Spacing (in)		
	(ksi)	12	16	24	12	16	24	12	16	24	12	16	24
1200S162-54	50	31' 9" e	27' 11" e	22' 10" e	32' 3" e	27' 11" e	22' 5" e	29' 0" e	26' 3" e	22' 10" e	32' 3" e	27' 11" e	22' 5" e
1200S200-54	50	33' 2" e	30' 0" e	24' 8" e	34' 10" e	29' 7" e	23' 2" e	30' 3" e	27' 5" e	23' 10" e	33' 9" e	29' 7" e	23' 2" e
1200S250-54	50	34' 6" e	31' 2" e	25' 6" e	35' 5" e	30' 0" e	23' 5" e	31' 5" e	28' 6" e	24' 10" e	35' 1" e	30' 0" e	23' 5" e
1200S162-68	50	34' 8"	31' 5"	27' 1"	38' 4"	33' 2"	27' 1"	31' 7"	28' 8"	24' 11"	35' 3"	32' 0"	27' 1"
1200S200-68	50	36' 1"	32' 9"	28' 6"	40' 4"	35' 9"	29' 2"	32' 11"	29' 10"	26' 0"	36' 9"	33' 4"	29' 0"
1200S250-68	50	37' 6"	34' 0"	29' 7"	41' 11"	36' 11"	30' 1"	34' 2"	31' 0"	27' 0"	38' 2"	34' 8"	30' 1"
1200S162-97	50	38' 11"	35' 4"	30' 11"	43' 8"	39' 8"	34' 8"	35' 4"	32' 1"	28' 1"	39' 8"	36' 1"	31' 6"
1200S200-97	50	40' 6"	36' 10"	32' 2"	45' 6"	41' 4"	36' 1"	36' 10"	33' 5"	29' 3"	41' 4"	37' 7"	32' 10"
1200S250-97	50	42' 1"	38' 2"	33' 4"	47' 2"	42' 11"	37' 6"	38' 2"	34' 8"	30' 4"	42' 11"	39' 0"	34' 1"
1200S162-118	50	41' 3"	37' 6"	32' 9"	46' 4"	42' 1"	36' 9"	37' 6"	34' 1"	29' 9"	42' 1"	38' 3"	33' 5"
1200S200-118	50	43' 0"	39' 1"	34' 1"	48' 3"	43' 10"	38' 4"	39' 1"	35' 6"	31' 0"	43' 10"	39' 10"	34' 10"
1200S250-118	50	44' 8"	40' 7"	35' 5"	50' 2"	45' 7"	39' 9"	40' 7"	36' 10"	32' 2"	45' 7"	41' 5"	36' 2"
1200S300-118	50	46' 2"	42' 0"	36' 8"	51' 10"	47' 1"	41' 2"	42' 0"	38' 2"	33' 4"	47' 1"	42' 10"	37' 5"
1200S350-118	50	48' 5"	44' 0"	38' 5"	54' 5"	49' 5"	43' 2"	44' 0"	40' 0"	34' 11"	49' 5"	44' 11"	39' 3"
1400S162-54	50	34' 0" e	29' 6" e	24' 1" e	34' 0" e	29' 6" e	22' 9" e	32' 7" e	29' 6" e	24' 1" e	34' 0" e	29' 6" e	22' 9" e
1400S200-54	50	37' 0" e	32' 1" e	26' 2" e	36' 4" e	30' 6" e	23' 4" e	34' 0" e	30' 10" e	26' 2" e	36' 4" e	30' 6" e	23' 4" e
1400S250-54	50	38' 6" e	33' 4" e	27' 2" e	36' 11" e	30' 10" e	23' 7" e	35' 4" e	32' 0" e	27' 2" e	36' 11" e	30' 10" e	23' 7" e
1400S300-54	50	39' 5" e	34' 1" e	27' 10" e	37' 2" e	31' 1" e	23' 9" e	36' 5" e	32' 11" e	27' 10" e	37' 2" e	31' 1" e	23' 9" e
1400S350-54	50	42' 8" e	38' 4" e	31' 4" e	40' 7" e	33' 8" e	25' 3" e	38' 10" e	35' 3" e	30' 8" e	40' 7" e	33' 8" e	25' 3" e
1400S162-68	50	39' 1"	35' 3"	28' 9"	40' 8"	35' 3"	28' 9"	35' 8"	32' 4"	28' 2"	39' 9"	35' 3"	28' 9"
1400S200-68	50	40' 8"	36' 10"	31' 1"	44' 0"	38' 1"	31' 1"	37' 1"	33' 8"	29' 3"	41' 5"	37' 6"	31' 1"
1400S250-68	50	42' 2"	38' 3"	32' 3"	45' 8"	39' 6"	31' 11"	38' 6"	34' 11"	30' 5"	43' 0"	38' 11"	31' 11"
1400S300-68	50	43' 7"	39' 5"	33' 0"	46' 9"	40' 6"	32' 4"	39' 9"	36' 0"	31' 5"	44' 5"	40' 1"	32' 4"
1400S350-68	50	46' 1"	41' 10"	36' 7"	51' 9"	45' 2"	35' 11"	41' 10"	38' 0"	33' 3"	47' 0"	42' 8"	35' 11"
1400S162-97	50	44' 5"	40' 4"	35' 2"	49' 9"	45' 1"	37' 8"	40' 4"	36' 8"	32' 0"	45' 4"	41' 2"	35' 10"
1400S200-97	50	46' 1"	41' 11"	36' 6"	51' 8"	46' 10"	40' 5"	41' 11"	38' 1"	33' 3"	47' 0"	42' 9"	37' 3"
1400S250-97	50	47' 9"	43' 4"	37' 10"	53' 6"	48' 7"	41' 11"	43' 4"	39' 5"	34' 5"	48' 8"	44' 3"	38' 7"
1400S300-97	50	49' 3"	44' 9"	39' 1"	55' 3"	50' 2"	42' 11"	44' 9"	40' 8"	35' 6"	50' 3"	45' 8"	39' 10"
1400S350-97	50	51' 6"	46' 9"	40' 11"	57' 10"	52' 6"	45' 11"	46' 9"	42' 6"	37' 2"	52' 6"	47' 9"	41' 8"
1400S162-118	50	47' 2"	42' 10"	37' 5"	52' 11"	48' 1"	42' 0"	42' 10"	38' 11"	34' 0"	48' 1"	43' 8"	38' 2"
1400S200-118	50	48' 11"	44' 6"	38' 10"	55' 0"	49' 11"	43' 8"	44' 6"	40' 5"	35' 4"	49' 11"	45' 4"	39' 8"
1400S250-118	50	50' 9"	46' 1"	40' 3"	56' 11"	51' 9"	45' 2"	46' 1"	41' 10"	36' 7"	51' 9"	47' 0"	41' 1"
1400S300-118	50	52' 4"	47' 7"	41' 7"	58' 9"	53' 5"	46' 8"	47' 7"	43' 3"	37' 9"	53' 5"	48' 6"	42' 5"
1400S350-118	50	54' 9"	49' 9"	43' 6"	61' 6"	55' 10"	48' 10"	49' 9"	45' 3"	39' 6"	55' 10"	50' 9"	44' 4"
1600S162-68	50	42' 8" e	36' 11" e	30' 2" e	42' 8" e	36' 11" e	30' 2" e	39' 7" e	35' 10" e	30' 2" e	42' 8" e	36' 11" e	30' 2" e
1600S200-68	50	45' 0" e	40' 1" e	32' 8" e	46' 3" e	40' 1" e	32' 8" e	41' 2" e	37' 3" e	32' 5" e	45' 10" e	40' 1" e	32' 8" e
1600S250-68	50	46' 8" e	41' 9" e	34' 1" e	48' 3" e	41' 9" e	33' 0" e	42' 7" e	38' 7" e	33' 7" e	47' 6" e	41' 9" e	33' 0" e
1600S300-68	50	48' 2" e	42' 11" e	35' 1" e	49' 7" e	42' 5" e	33' 4" e	44' 0" e	39' 10" e	34' 8" e	49' 0" e	42' 5" e	33' 4" e
1600S350-68	50	50' 5" e	45' 9" e	39' 4" e	54' 8" e	46' 3" e	36' 1" e	46' 0" e	41' 9" e	36' 4" e	51' 5" e	46' 3" e	36' 1" e
1600S162-97	50	49' 8"	45' 0"	39' 2"	55' 5"	48' 9"	39' 10"	45' 4"	41' 1"	35' 9"	50' 7"	45' 10"	39' 10"
1600S200-97	50	51' 6"	46' 8"	40' 7"	57' 6"	52' 1"	42' 10"	46' 11"	42' 7"	37' 1"	52' 5"	47' 7"	41' 5"
1600S250-97	50	53' 3"	48' 3"	42' 0"	59' 6"	53' 11"	44' 7"	48' 6"	44' 0"	38' 4"	54' 3"	49' 2"	42' 10"
1600S300-97	50	54' 10"	49' 9"	43' 4"	61' 4"	55' 7"	45' 9"	49' 11"	45' 4"	39' 6"	55' 11"	50' 9"	44' 2"
1600S350-97	50	57' 3"	52' 0"	45' 4"	64' 1"	58' 2"	50' 7"	52' 1"	47' 4"	41' 3"	58' 5"	53' 0"	46' 2"
1600S162-118	50	53' 0"	48' 2"	42' 1"	59' 6"	54' 0"	46' 5"	48' 2"	43' 9"	38' 2"	54' 0"	49' 1"	42' 11"
1600S200-118	50	54' 10"	49' 10"	43' 7"	61' 7"	56' 0"	48' 9"	49' 10"	45' 4"	39' 7"	56' 0"	50' 10"	44' 5"
1600S250-118	50	56' 8"	51' 6"	45' 0"	63' 8"	57' 10"	50' 5"	51' 6"	46' 10"	40' 11"	57' 10"	52' 7"	45' 11"
1600S300-118	50	58' 5"	53' 1"	46' 4"	65' 7"	59' 7"	52' 0"	53' 1"	48' 3"	42' 2"	59' 7"	54' 2"	47' 4"
1600S350-118	50	61' 0"	55' 5"	48' 5"	68' 6"	62' 3"	54' 4"	55' 5"	50' 4"	44' 0"	62' 3"	56' 6"	49' 5"

" e " Requires web stiffeners at end supports

Web stiffeners required at all interior supports for 2-span conditions.

Floor Joist Span Tables

See Allowable Floor Joist Span Table Notes on page 29.

10 psf Dead Load and 30 psf Live Load

Complies with 2009 & 2012 International Building Code (IBC)

10 psf Dead Load and 30 psf Live Load													
Section	F_y	L/360 Live Load Deflection						L/480 Live Load Deflection					
		Single Span			Two Equal Spans			Single Span			Two Equal Spans		
		Spacing (in)			Spacing (in)			Spacing (in)			Spacing (in)		
	(ksi)	12	16	24	12	16	24	12	16	24	12	16	24
600S162-33	33	12' 7" e	10' 11" e	8' 11" e	12' 7"	10' 10"	8' 5" e	12' 6" e	10' 11" e	8' 11" e	12' 7"	10' 10"	8' 5" e
600S200-33	33	13' 5" e	11' 7" e	9' 6" e	13' 3"	11' 2"	8' 8" e	13' 2" e	11' 7" e	9' 6" e	13' 3"	11' 2"	8' 8" e
600S162-43	33	15' 0"	13' 5"	11' 0" e	15' 6"	13' 5"	11' 0"	13' 8"	12' 5"	10' 10" e	15' 4"	13' 5"	11' 0"
600S200-43	33	15' 9"	13' 10"	11' 4" e	16' 0"	13' 10"	11' 4"	14' 4"	13' 0"	11' 4" e	16' 0"	13' 10"	11' 4"
600S250-43	33	16' 5"	14' 3"	11' 7" e	16' 5"	14' 3"	11' 7"	15' 0"	13' 7"	11' 7" e	16' 5"	14' 3"	11' 7"
600S162-54	50	16' 1"	14' 7"	12' 9"	18' 1"	16' 5"	14' 4"	14' 7"	13' 3"	11' 7"	16' 5"	14' 11"	13' 0"
600S200-54	50	16' 11"	15' 4"	13' 5"	19' 0"	17' 3"	15' 1"	15' 4"	14' 0"	12' 2"	17' 3"	15' 8"	13' 8"
600S250-54	50	17' 9"	16' 1"	14' 1"	19' 11"	18' 1"	15' 6"	16' 1"	14' 8"	12' 9"	18' 1"	16' 5"	14' 4"
600S162-68	50	17' 3"	15' 8"	13' 8"	19' 4"	17' 7"	15' 4"	15' 8"	14' 3"	12' 5"	17' 7"	16' 0"	14' 0"
600S200-68	50	18' 2"	16' 6"	14' 5"	20' 4"	18' 6"	16' 2"	16' 6"	15' 0"	13' 1"	18' 6"	16' 10"	14' 8"
600S250-68	50	19' 0"	17' 3"	15' 1"	21' 4"	19' 5"	16' 11"	17' 3"	15' 8"	13' 9"	19' 5"	17' 8"	15' 5"
600S162-97	50	19' 1"	17' 4"	15' 2"	21' 6"	19' 6"	17' 0"	17' 4"	15' 9"	13' 9"	19' 6"	17' 9"	15' 6"
600S200-97	50	20' 2"	18' 4"	16' 0"	22' 7"	20' 7"	17' 11"	18' 4"	16' 8"	14' 6"	20' 7"	18' 8"	16' 4"
600S250-97	50	21' 2"	19' 3"	16' 9"	23' 9"	21' 7"	18' 10"	19' 3"	17' 6"	15' 3"	21' 7"	19' 7"	17' 2"
600S162-118	50	20' 2"	18' 4"	16' 0"	22' 8"	20' 7"	18' 0"	18' 4"	16' 8"	14' 7"	20' 7"	18' 9"	16' 4"
600S200-118	50	21' 4"	19' 4"	16' 11"	23' 11"	21' 9"	19' 0"	19' 4"	17' 7"	15' 4"	21' 9"	19' 9"	17' 3"
600S250-118	50	22' 5"	20' 4"	17' 9"	25' 2"	22' 10"	20' 0"	20' 4"	18' 6"	16' 2"	22' 10"	20' 9"	18' 2"
800S162-33	33	14' 6" e	12' 7" e	10' 3" e	13' 0" e	10' 9" e	8' 0" e	14' 6" e	12' 7" e	10' 3" e	13' 0" e	10' 9" e	8' 0" e
800S200-33	33	15' 7" e	13' 6" e	11' 0" e	13' 8" e	11' 2" e	8' 2" e	15' 7" e	13' 6" e	11' 0" e	13' 8" e	11' 2" e	8' 2" e
800S162-43	33	17' 6"	15' 2" e	12' 4" e	17' 6"	14' 11"	11' 9"	17' 1"	15' 2" e	12' 4" e	17' 6"	14' 11"	11' 9"
800S200-43	33	18' 8"	16' 2" e	13' 3" e	18' 8"	16' 2"	12' 11" e	18' 0"	16' 2" e	13' 3" e	18' 8"	16' 2"	12' 11" e
800S250-43	33	19' 2" e	16' 7" e	13' 7" e	19' 2"	16' 7"	13' 0" e	18' 9"	16' 7" e	13' 7" e	19' 2"	16' 7"	13' 0" e
800S162-54	50	20' 3"	18' 5"	16' 0"	22' 8"	20' 3"	16' 6"	18' 5"	16' 9"	14' 7"	20' 8"	18' 9"	16' 4"
800S200-54	50	21' 3"	19' 4"	16' 10"	23' 10"	21' 7"	17' 8"	19' 4"	17' 6"	15' 4"	21' 8"	19' 8"	17' 2"
800S250-54	50	22' 2"	20' 2"	17' 7"	24' 11"	22' 1"	18' 1"	20' 2"	18' 3"	16' 0"	22' 7"	20' 6"	17' 11"
800S162-68	50	21' 9"	19' 9"	17' 3"	24' 5"	22' 3"	19' 5"	19' 9"	18' 0"	15' 8"	22' 3"	20' 2"	17' 8"
800S200-68	50	22' 10"	20' 9"	18' 1"	25' 7"	23' 3"	20' 4"	20' 9"	18' 10"	16' 5"	23' 3"	21' 2"	18' 6"
800S250-68	50	23' 10"	21' 8"	18' 11"	26' 9"	24' 3"	21' 2"	21' 8"	19' 8"	17' 2"	24' 3"	22' 1"	19' 3"
800S162-97	50	24' 2"	22' 0"	19' 2"	27' 2"	24' 8"	21' 7"	22' 0"	20' 0"	17' 5"	24' 8"	22' 5"	19' 7"
800S200-97	50	25' 4"	23' 1"	20' 2"	28' 6"	25' 11"	22' 7"	23' 1"	20' 11"	18' 4"	25' 11"	23' 6"	20' 6"
800S250-97	50	26' 6"	24' 1"	21' 0"	29' 9"	27' 1"	23' 7"	24' 1"	21' 11"	19' 1"	27' 1"	24' 7"	21' 6"
800S162-118	50	25' 7"	23' 3"	20' 4"	28' 9"	26' 1"	22' 10"	23' 3"	21' 1"	18' 5"	26' 1"	23' 9"	20' 9"
800S200-118	50	26' 10"	24' 5"	21' 4"	30' 2"	27' 5"	23' 11"	24' 5"	22' 2"	19' 5"	27' 5"	24' 11"	21' 9"
800S250-118	50	28' 1"	25' 6"	22' 4"	31' 7"	28' 8"	25' 1"	25' 6"	23' 2"	20' 3"	28' 8"	26' 1"	22' 9"
1000S162-43	33	19' 4" e	16' 9" e	13' 8" e	18' 10" e	15' 10" e	12' 2" e	19' 4" e	16' 9" e	13' 8" e	18' 10" e	15' 10" e	12' 2" e
1000S200-43	33	20' 11" e	18' 1" e	14' 9" e	19' 9" e	16' 6" e	12' 7" e	20' 11" e	18' 1" e	14' 9" e	19' 9" e	16' 6" e	12' 7" e
1000S250-43	33	21' 6" e	18' 7" e	15' 2" e	20' 6" e	17' 1" e	13' 0" e	21' 6" e	18' 7" e	15' 2" e	20' 6" e	17' 1" e	13' 0" e
1000S162-54	50	24' 1"	21' 10"	18' 4"	25' 11"	22' 6"	18' 2"	22' 0"	19' 11"	17' 4"	24' 7"	22' 3"	18' 2"
1000S200-54	50	25' 2"	22' 10"	19' 9"	27' 10"	23' 8"	18' 9"	23' 0"	20' 10"	18' 2"	25' 8"	23' 3"	18' 9"
1000S250-54	50	26' 5"	24' 0"	20' 3"	28' 8"	24' 9"	19' 6"	24' 0"	21' 10"	19' 1"	27' 0"	24' 6"	19' 6"
1000S162-68	50	26' 2"	23' 9"	20' 8"	29' 3"	26' 6"	21' 8"	23' 9"	21' 7"	18' 10"	26' 8"	24' 2"	21' 1"
1000S200-68	50	27' 4"	24' 10"	21' 7"	30' 7"	27' 9"	23' 2"	24' 10"	22' 7"	19' 8"	27' 10"	25' 3"	22' 0"
1000S250-68	50	28' 5"	25' 10"	22' 7"	31' 11"	29' 0"	23' 10"	25' 10"	23' 5"	20' 6"	29' 0"	26' 4"	23' 0"
1000S162-97	50	29' 2"	26' 6"	23' 1"	32' 8"	29' 9"	26' 0"	26' 6"	24' 1"	21' 0"	29' 9"	27' 0"	23' 7"
1000S200-97	50	30' 5"	27' 8"	24' 2"	34' 2"	31' 0"	27' 1"	27' 8"	25' 1"	21' 11"	31' 0"	28' 2"	24' 8"
1000S250-97	50	31' 8"	28' 9"	25' 2"	35' 7"	32' 4"	28' 3"	28' 9"	26' 2"	22' 10"	32' 4"	29' 4"	25' 8"
1000S162-118	50	30' 10"	28' 0"	24' 6"	34' 8"	31' 6"	27' 6"	28' 0"	25' 6"	22' 3"	31' 6"	28' 7"	25' 0"
1000S200-118	50	32' 3"	29' 4"	25' 7"	36' 3"	32' 11"	28' 9"	29' 4"	26' 8"	23' 3"	32' 11"	29' 11"	26' 1"
1000S250-118	50	33' 7"	30' 7"	26' 8"	37' 9"	34' 4"	29' 11"	30' 7"	27' 9"	24' 3"	34' 4"	31' 2"	27' 3"
1200S162-54	50	27' 9" e	24' 2" e	19' 9" e	27' 11" e	24' 1" e	18' 9" e	25' 4" e	22' 11" e	19' 9" e	27' 11" e	24' 1" e	18' 9" e
1200S200-54	50	28' 11" e	26' 2" e	21' 4" e	29' 7" e	24' 11" e	19' 3" e	26' 5" e	23' 11" e	20' 10" e	29' 6" e	24' 11" e	19' 3" e
1200S250-54	50	30' 1" e	27' 0" e	22' 1" e	30' 0" e	25' 3" e	19' 6" e	27' 5" e	24' 11" e	21' 8" e	30' 0" e	25' 3" e	19' 6" e
1200S162-68	50	30' 3"	27' 5"	23' 6"	33' 2"	28' 9"	23' 6"	27' 7"	25' 0"	21' 9"	30' 10"	27' 11"	23' 6"
1200S200-68	50	31' 6"	28' 7"	24' 11"	35' 2"	30' 11"	25' 3"	28' 9"	26' 1"	22' 8"	32' 1"	29' 1"	25' 3"
1200S250-68	50	32' 9"	29' 8"	25' 10"	36' 7"	31' 11"	25' 9"	29' 10"	27' 1"	23' 7"	33' 4"	30' 3"	25' 9"
1200S162-97	50	34' 0"	30' 11"	27' 0"	38' 2"	34' 8"	30' 3"	30' 11"	28' 1"	24' 6"	34' 8"	31' 6"	27' 6"
1200S200-97	50	35' 5"	32' 2"	28' 1"	39' 9"	36' 1"	31' 6"	32' 2"	29' 3"	25' 6"	36' 1"	32' 10"	28' 8"
1200S250-97	50	36' 9"	33' 4"	29' 2"	41' 3"	37' 6"	32' 9"	33' 4"	30' 4"	26' 6"	37' 6"	34' 1"	29' 9"
1200S162-118	50	36' 1"	32' 9"	28' 7"	40' 6"	36' 9"	32' 1"	32' 9"	29' 9"	26' 0"	36' 9"	33' 5"	29' 2"
1200S200-118	50	37' 7"	34' 1"	29' 10"	42' 2"	38' 4"	33' 6"	34' 1"	31' 0"	27' 1"	38' 4"	34' 10"	30' 5"
1200S250-118	50	39' 0"	35' 5"	30' 11"	43' 9"	39' 9"	34' 9"	35' 5"	32' 2"	28' 2"	39' 9"	36' 2"	31' 7"
1200S300-118	50	40' 4"	36' 8"	32' 0"	45' 4"	41' 2"	36' 0"	36' 8"	33' 4"	29' 1"	41' 2"	37' 5"	32' 8"
1200S350-118	50	42' 4"	38' 5"	33' 7"	47' 6"	43' 2"	37' 8"	38' 5"	34' 11"	30' 6"	43' 2"	39' 3"	34' 3"

" e " Requires web stiffeners at end supports

Web stiffeners required at all interior supports for 2-span conditions.

Floor Joist Span Tables

See Allowable Floor Joist Span Table Notes on page 29.

10 psf Dead Load and 30 psf Live Load

Complies with 2009 & 2012 International Building Code (IBC)

10 psf Dead Load and 30 psf Live Load													
Section	F_y	L/360 Live Load Deflection						L/480 Live Load Deflection					
		Single Span			Two Equal Spans			Single Span			Two Equal Spans		
		Spacing (in)			Spacing (in)			Spacing (in)			Spacing (in)		
	(ksi)	12	16	24	12	16	24	12	16	24	12	16	24
1400S162-54	50	29' 6" e	25' 6" e	20' 10" e	29' 6" e	24' 7" e	18' 7" e	28' 6" e	25' 6" e	20' 10" e	29' 6" e	24' 7" e	18' 7" e
1400S200-54	50	32' 1" e	27' 9" e	22' 8" e	30' 6" e	25' 3" e	19' 0" e	29' 8" e	26' 11" e	22' 8" e	30' 6" e	25' 3" e	19' 0" e
1400S250-54	50	33' 4" e	28' 10" e	23' 7" e	30' 10" e	25' 7" e	19' 2" e	30' 10" e	27' 11" e	23' 7" e	30' 10" e	25' 7" e	19' 2" e
1400S300-54	50	34' 1" e	29' 7" e	24' 1" e	31' 1" e	25' 9" e	19' 3" e	31' 10" e	28' 9" e	24' 1" e	31' 1" e	25' 9" e	19' 3" e
1400S350-54	50	37' 2" e	33' 3" e	27' 1" e	33' 8" e	27' 7" e	20' 3" e	33' 11" e	30' 10" e	26' 9" e	33' 8" e	27' 7" e	20' 3" e
1400S162-68	50	34' 1"	30' 6"	24' 11"	35' 3"	30' 6"	24' 11"	31' 2"	28' 3"	24' 7"	34' 9"	30' 6"	24' 11"
1400S200-68	50	35' 6"	32' 2"	26' 11"	38' 1"	33' 0"	26' 10"	32' 5"	29' 4"	25' 7"	36' 2"	32' 9"	26' 10"
1400S250-68	50	36' 10"	33' 4"	27' 11"	39' 6"	34' 2"	27' 0"	33' 7"	30' 6"	26' 6"	37' 6"	34' 0"	27' 0"
1400S300-68	50	38' 1"	34' 5"	28' 7"	40' 6"	34' 7"	27' 3"	34' 8"	31' 6"	27' 5"	38' 9"	34' 7"	27' 3"
1400S350-68	50	40' 3"	36' 7"	31' 11" e	45' 2"	38' 6"	30' 1"	36' 7"	33' 3"	29' 0"	41' 1"	37' 3"	30' 1"
1400S162-97	50	38' 10"	35' 3"	30' 8"	43' 5"	39' 4"	32' 8"	35' 3"	32' 0"	28' 0"	39' 7"	35' 11"	31' 3"
1400S200-97	50	40' 3"	36' 7"	31' 11"	45' 2"	40' 11"	35' 0"	36' 7"	33' 3"	29' 1"	41' 1"	37' 4"	32' 6"
1400S250-97	50	41' 8"	37' 11"	33' 1"	46' 9"	42' 5"	36' 3"	37' 11"	34' 5"	30' 1"	42' 6"	38' 8"	33' 8"
1400S300-97	50	43' 0"	39' 1"	34' 2"	48' 3"	43' 10"	37' 2"	39' 1"	35' 6"	31' 0"	43' 11"	39' 11"	34' 9"
1400S350-97	50	45' 0"	40' 11"	35' 8"	50' 6"	45' 11"	40' 1"	40' 11"	37' 2"	32' 5"	45' 11"	41' 8"	36' 5"
1400S162-118	50	41' 2"	37' 5"	32' 8"	46' 3"	42' 0"	36' 8"	37' 5"	34' 0"	29' 8"	42' 0"	38' 2"	33' 4"
1400S200-118	50	42' 9"	38' 10"	33' 11"	48' 0"	43' 8"	38' 1"	38' 10"	35' 4"	30' 10"	43' 8"	39' 8"	34' 8"
1400S250-118	50	44' 4"	40' 3"	35' 2"	49' 9"	45' 2"	39' 6"	40' 3"	36' 7"	31' 11"	45' 2"	41' 1"	35' 10"
1400S300-118	50	45' 9"	41' 7"	36' 4"	51' 4"	46' 8"	40' 9"	41' 7"	37' 9"	33' 0"	46' 8"	42' 5"	37' 0"
1400S350-118	50	47' 10"	43' 6"	38' 0"	53' 9"	48' 10"	42' 8"	43' 6"	39' 6"	34' 6"	48' 10"	44' 4"	38' 9"
1600S162-68	50	36' 11" e	32' 0" e	26' 1" e	36' 11" e	32' 0" e	26' 1" e	34' 7" e	31' 4" e	26' 1" e	36' 11" e	32' 0" e	26' 1" e
1600S200-68	50	39' 4" e	34' 8" e	28' 4" e	40' 1" e	34' 8" e	27' 5" e	35' 11" e	32' 7" e	28' 4" e	40' 0" e	34' 8" e	27' 5" e
1600S250-68	50	40' 9" e	36' 2" e	29' 6" e	41' 9" e	35' 5" e	27' 7" e	37' 2" e	33' 9" e	29' 4" e	41' 6" e	35' 5" e	27' 7" e
1600S300-68	50	42' 0" e	37' 2" e	30' 4" e	42' 5" e	35' 10" e	27' 10" e	38' 5" e	34' 10" e	30' 3" e	42' 5" e	35' 10" e	27' 10" e
1600S350-68	50	44' 0" e	39' 11" e	34' 0" e	46' 3" e	38' 10" e	29' 10" e	40' 2" e	36' 5" e	31' 9" e	44' 11" e	38' 10" e	29' 10" e
1600S162-97	50	43' 4"	39' 3"	34' 2"	48' 4"	42' 3"	34' 6"	39' 7"	35' 11"	31' 3"	44' 2"	40' 0"	34' 6"
1600S200-97	50	44' 11"	40' 9"	35' 6"	50' 2"	45' 5"	37' 1"	41' 0"	37' 2"	32' 5"	45' 10"	41' 6"	36' 2"
1600S250-97	50	46' 6"	42' 2"	36' 8"	51' 11"	47' 1"	38' 7"	42' 4"	38' 5"	33' 6"	47' 4"	42' 11"	37' 5"
1600S300-97	50	47' 11"	43' 5"	37' 10"	53' 7"	48' 6"	39' 7"	43' 7"	39' 7"	34' 6"	48' 10"	44' 3"	38' 7"
1600S350-97	50	50' 0"	45' 5"	39' 7"	56' 0"	50' 9"	43' 10"	45' 6"	41' 4"	36' 1"	51' 0"	46' 3"	40' 4"
1600S162-118	50	46' 3"	42' 1"	36' 9"	51' 11"	47' 2"	40' 2"	42' 1"	38' 2"	33' 4"	47' 2"	42' 11"	37' 6"
1600S200-118	50	47' 11"	43' 7"	38' 1"	53' 10"	48' 10"	42' 7"	43' 7"	39' 7"	34' 7"	48' 11"	44' 5"	38' 10"
1600S250-118	50	49' 6"	45' 0"	39' 4"	55' 7"	50' 6"	44' 0"	45' 0"	40' 11"	35' 9"	50' 6"	45' 11"	40' 1"
1600S300-118	50	51' 0"	46' 4"	40' 6"	57' 4"	52' 1"	45' 5"	46' 4"	42' 2"	36' 10"	52' 1"	47' 4"	41' 4"
1600S350-118	50	53' 4"	48' 5"	42' 4"	59' 10"	54' 4"	47' 5"	48' 5"	44' 0"	38' 5"	54' 4"	49' 5"	43' 2"

" e " Requires web stiffeners at end supports
Web stiffeners required at all interior supports for 2-span conditions.

Web Stiffener: Stud Segment on Back of Joist

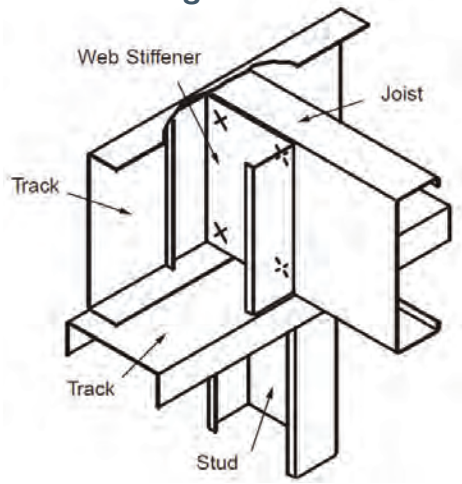

Web Stiffener: Track Inside Joist

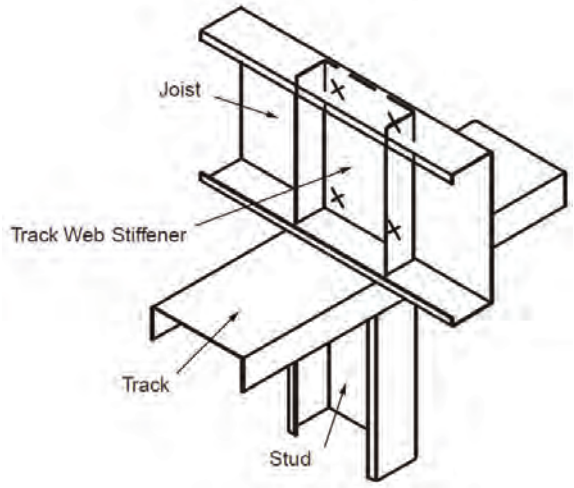

Floor Joist Span Tables

See Allowable Floor Joist Span Table Notes on page 29.

10 psf Dead Load and 40 psf Live Load

Complies with 2009 & 2012 International Building Code (IBC)

10 psf Dead Load and 40 psf Live Load													
Section	F_y	L/360 Live Load Deflection						L/480 Live Load Deflection					
		Single Span			Two Equal Spans			Single Span			Two Equal Spans		
		Spacing (in)			Spacing (in)			Spacing (in)			Spacing (in)		
	(ksi)	12	16	24	12	16	24	12	16	24	12	16	24
600S162-33	33	11' 3" e	9' 9" e	7' 11" e	11' 3"	9' 6"	7' 4" e	11' 3" e	9' 9" e	7' 11" e	11' 3"	9' 6"	7' 4" e
600S200-33	33	12' 0" e	10' 4" e	8' 6" e	11' 7"	9' 9" e	7' 6" e	11' 11" e	10' 4" e	8' 6" e	11' 7"	9' 9" e	7' 6" e
600S162-43	33	13' 8"	12' 0" e	9' 10" e	13' 11"	12' 0"	9' 10"	12' 5"	11' 3"	9' 10" e	13' 11"	12' 0"	9' 10"
600S200-43	33	14' 4"	12' 5" e	10' 2" e	14' 4"	12' 5"	10' 0"	13' 0"	11' 10"	10' 2" e	14' 4"	12' 5"	10' 0"
600S250-43	33	14' 8"	12' 9" e	10' 5" e	14' 8"	12' 9"	10' 2"	13' 7"	12' 4" e	10' 5" e	14' 8"	12' 9"	10' 2"
600S162-54	50	14' 7"	13' 3"	11' 7"	16' 5"	14' 11"	13' 0"	13' 3"	12' 1"	10' 7"	14' 11"	13' 7"	11' 10"
600S200-54	50	15' 4"	14' 0"	12' 2"	17' 3"	15' 8"	13' 6"	14' 0"	12' 8"	11' 1"	15' 8"	14' 3"	12' 5"
600S250-54	50	16' 1"	14' 8"	12' 9"	18' 1"	16' 5"	13' 10"	14' 8"	13' 3"	11' 7"	16' 5"	14' 11"	13' 0"
600S162-68	50	15' 8"	14' 3"	12' 5"	17' 7"	16' 0"	14' 0"	14' 3"	12' 11"	11' 4"	16' 0"	14' 6"	12' 8"
600S200-68	50	16' 6"	15' 0"	13' 1"	18' 6"	16' 10"	14' 8"	15' 0"	13' 7"	11' 11"	16' 10"	15' 3"	13' 4"
600S250-68	50	17' 3"	15' 8"	13' 9"	19' 5"	17' 8"	15' 5"	15' 8"	14' 3"	12' 6"	17' 8"	16' 0"	14' 0"
600S162-97	50	17' 4"	15' 9"	13' 9"	19' 6"	17' 9"	15' 6"	15' 9"	14' 4"	12' 6"	17' 9"	16' 1"	14' 1"
600S200-97	50	18' 4"	16' 8"	14' 6"	20' 7"	18' 8"	16' 4"	16' 8"	15' 1"	13' 2"	18' 8"	17' 0"	14' 10"
600S250-97	50	19' 3"	17' 6"	15' 3"	21' 7"	19' 7"	17' 2"	17' 6"	15' 10"	13' 10"	19' 7"	17' 10"	15' 7"
600S162-118	50	18' 4"	16' 8"	14' 7"	20' 7"	18' 9"	16' 4"	16' 8"	15' 2"	13' 3"	18' 9"	17' 0"	14' 10"
600S200-118	50	19' 4"	17' 7"	15' 4"	21' 9"	19' 9"	17' 3"	17' 7"	16' 0"	14' 0"	19' 9"	17' 11"	15' 8"
600S250-118	50	20' 4"	18' 6"	16' 2"	22' 10"	20' 9"	18' 2"	18' 6"	16' 10"	14' 8"	20' 9"	18' 10"	16' 6"
800S162-33	33	13' 0" e	11' 3" e	9' 2" e	11' 3" e	9' 2" e	6' 8" e	13' 0" e	11' 3" e	9' 2" e	11' 3" e	9' 2" e	6' 8" e
800S200-33	33	13' 11" e	12' 1" e	9' 6" e	11' 8" e	9' 6" e	6' 10" e	13' 11" e	12' 1" e	9' 6" e	11' 8" e	9' 6" e	6' 10" e
800S162-43	33	15' 8" e	13' 6" e	11' 1" e	15' 5"	13' 1"	10' 4" e	15' 6" e	13' 6" e	11' 1" e	15' 5"	13' 1"	10' 4" e
800S200-43	33	16' 9" e	14' 6" e	11' 10" e	16' 9"	14' 6"	11' 3" e	16' 4" e	14' 6" e	11' 10" e	16' 9"	14' 6"	11' 3" e
800S250-43	33	17' 2" e	14' 10" e	12' 2" e	17' 2"	14' 7"	11' 4" e	17' 0" e	14' 10" e	12' 2" e	17' 2"	14' 7"	11' 4" e
800S162-54	50	18' 5"	16' 8"	14' 7"	20' 7"	18' 1"	14' 9"	16' 9"	15' 3"	13' 3"	18' 9"	17' 0"	14' 9"
800S200-54	50	19' 4"	17' 6"	15' 4"	21' 8"	19' 4"	15' 9"	17' 6"	15' 11"	13' 11"	19' 8"	17' 11"	15' 7"
800S250-54	50	20' 2"	18' 3"	16' 0"	22' 7"	19' 9"	16' 2"	18' 3"	16' 7"	14' 6"	20' 6"	18' 8"	16' 2"
800S162-68	50	19' 9"	18' 0"	15' 8"	22' 3"	20' 2"	17' 4"	18' 0"	16' 4"	14' 3"	20' 2"	18' 4"	16' 0"
800S200-68	50	20' 9"	18' 10"	16' 5"	23' 3"	21' 2"	18' 6"	18' 10"	17' 1"	14' 11"	21' 2"	19' 2"	16' 9"
800S250-68	50	21' 8"	19' 8"	17' 2"	24' 3"	22' 1"	18' 11"	19' 8"	17' 10"	15' 7"	22' 1"	20' 1"	17' 6"
800S162-97	50	22' 0"	20' 0"	17' 5"	24' 8"	22' 5"	19' 7"	20' 0"	18' 2"	15' 10"	22' 5"	20' 4"	17' 10"
800S200-97	50	23' 1"	20' 11"	18' 4"	25' 11"	23' 6"	20' 6"	20' 11"	19' 0"	16' 7"	23' 6"	21' 4"	18' 8"
800S250-97	50	24' 1"	21' 11"	19' 1"	27' 1"	24' 7"	21' 6"	21' 11"	19' 11"	17' 4"	24' 7"	22' 4"	19' 6"
800S162-118	50	23' 3"	21' 1"	18' 5"	26' 1"	23' 9"	20' 9"	21' 1"	19' 2"	16' 9"	23' 9"	21' 7"	18' 10"
800S200-118	50	24' 5"	22' 2"	19' 5"	27' 5"	24' 11"	21' 9"	22' 2"	20' 2"	17' 7"	24' 11"	22' 8"	19' 9"
800S250-118	50	25' 6"	23' 2"	20' 3"	28' 8"	26' 1"	22' 9"	23' 2"	21' 1"	18' 5"	26' 1"	23' 8"	20' 8"
1000S162-43	33	17' 4" e	15' 0" e	12' 3" e	16' 5" e	13' 8" e	10' 5" e	17' 4" e	15' 0" e	12' 3" e	16' 5" e	13' 8" e	10' 5" e
1000S200-43	33	18' 8" e	16' 2" e	13' 2" e	17' 3" e	14' 3" e	10' 9" e	18' 8" e	16' 2" e	13' 2" e	17' 3" e	14' 3" e	10' 9" e
1000S250-43	33	19' 3" e	16' 8" e	13' 7" e	17' 10" e	14' 9" e	11' 0" e	19' 3" e	16' 8" e	13' 7" e	17' 10" e	14' 9" e	11' 0" e
1000S162-54	50	21' 11"	19' 10"	16' 5"	23' 2"	20' 1"	15' 10"	20' 0"	18' 1"	15' 9"	22' 4"	20' 1"	15' 10"
1000S200-54	50	22' 10"	20' 9"	17' 8" e	24' 7"	20' 10"	16' 4"	20' 10"	18' 11"	16' 6"	23' 4"	20' 10"	16' 4"
1000S250-54	50	24' 0"	21' 10"	18' 1" e	25' 7"	21' 9"	17' 0"	21' 10"	19' 10"	17' 4" e	24' 6"	21' 9"	17' 0"
1000S162-68	50	23' 9"	21' 7"	18' 9"	26' 7"	23' 9"	19' 5"	21' 7"	19' 8"	17' 2"	24' 3"	22' 0"	19' 2"
1000S200-68	50	24' 10"	22' 6"	19' 8"	27' 9"	25' 2"	20' 9"	22' 7"	20' 6"	17' 11"	25' 4"	22' 11"	20' 0"
1000S250-68	50	25' 10"	23' 5"	20' 6"	29' 0"	26' 1"	21' 4"	23' 5"	21' 4"	18' 7"	26' 4"	23' 11"	20' 11"
1000S162-97	50	26' 6"	24' 1"	21' 0"	29' 9"	27' 0"	23' 7"	24' 1"	21' 10"	19' 1"	27' 0"	24' 6"	21' 5"
1000S200-97	50	27' 8"	25' 1"	21' 11"	31' 0"	28' 2"	24' 8"	25' 1"	22' 10"	19' 11"	28' 2"	25' 7"	22' 5"
1000S250-97	50	28' 9"	26' 2"	22' 10"	32' 4"	29' 4"	25' 8"	26' 2"	23' 9"	20' 9"	29' 4"	26' 8"	23' 4"
1000S162-118	50	28' 0"	25' 6"	22' 3"	31' 6"	28' 7"	25' 0"	25' 6"	23' 2"	20' 3"	28' 7"	26' 0"	22' 8"
1000S200-118	50	29' 4"	26' 8"	23' 3"	32' 11"	29' 11"	26' 1"	26' 8"	24' 2"	21' 2"	29' 11"	27' 2"	23' 9"
1000S250-118	50	30' 7"	27' 9"	24' 3"	34' 4"	31' 2"	27' 3"	27' 9"	25' 3"	22' 0"	31' 2"	28' 4"	24' 9"
1200S162-54	50	25' 0" e	21' 7" e	17' 8" e	25' 0" e	21' 0" e	16' 2" e	23' 0" e	20' 10" e	17' 8" e	25' 0" e	21' 0" e	16' 2" e
1200S200-54	50	26' 3" e	23' 5" e	19' 1" e	25' 11" e	21' 8" e	16' 6" e	24' 0" e	21' 9" e	18' 11" e	25' 11" e	21' 8" e	16' 6" e
1200S250-54	50	27' 4" e	24' 2" e	19' 9" e	26' 3" e	21' 11" e	16' 9" e	24' 11" e	22' 7" e	19' 8" e	26' 3" e	21' 11" e	16' 9" e
1200S162-68	50	27' 5"	24' 11"	21' 0"	29' 8"	25' 9"	21' 0"	25' 1"	22' 9"	19' 9"	28' 0"	25' 4"	21' 0"
1200S200-68	50	28' 7"	25' 11"	22' 7"	31' 11"	27' 8"	22' 7"	26' 1"	23' 8"	20' 7"	29' 2"	26' 5"	22' 7"
1200S250-68	50	29' 9"	26' 11"	23' 4"	33' 0"	28' 6"	22' 8"	27' 1"	24' 7"	21' 5"	30' 4"	27' 6"	22' 8"
1200S162-97	50	30' 11"	28' 1"	24' 6"	34' 8"	31' 6"	27' 3"	28' 1"	25' 6"	22' 3"	31' 6"	28' 8"	25' 0"
1200S200-97	50	32' 2"	29' 3"	25' 6"	36' 1"	32' 10"	28' 8"	29' 3"	26' 6"	23' 2"	32' 10"	29' 10"	26' 0"
1200S250-97	50	33' 4"	30' 4"	26' 6"	37' 6"	34' 1"	29' 9"	30' 4"	27' 7"	24' 1"	34' 1"	30' 11"	27' 0"

" e " Requires web stiffeners at end supports

Web stiffeners required at all interior supports for 2-span conditions.

Floor Joist Span Tables

See Allowable Floor Joist Span Table Notes on page 29.

10 psf Dead Load and 40 psf Live Load

Complies with 2009 & 2012 International Building Code (IBC)

10 psf Dead Load and 40 psf Live Load													
Section	F_y	L/360 Live Load Deflection						L/480 Live Load Deflection					
		Single Span			Two Equal Spans			Single Span			Two Equal Spans		
		Spacing (in)			Spacing (in)			Spacing (in)			Spacing (in)		
	(ksi)	12	16	24	12	16	24	12	16	24	12	16	24
1200S162-118	50	32' 9"	29' 9"	26' 0"	36' 9"	33' 5"	29' 2"	29' 9"	27' 0"	23' 7"	33' 5"	30' 4"	26' 6"
1200S200-118	50	34' 1"	31' 0"	27' 1"	38' 4"	34' 10"	30' 5"	31' 0"	28' 2"	24' 7"	34' 10"	31' 7"	27' 7"
1200S250-118	50	35' 5"	32' 2"	28' 2"	39' 9"	36' 2"	31' 7"	32' 2"	29' 3"	25' 7"	36' 2"	32' 10"	28' 8"
1200S300-118	50	36' 8"	33' 4"	29' 1"	41' 2"	37' 5"	32' 8"	33' 4"	30' 3"	26' 5"	37' 5"	34' 0"	29' 8"
1200S350-118	50	38' 5"	34' 11"	30' 6"	43' 2"	39' 3"	34' 3"	34' 11"	31' 9"	27' 9"	39' 3"	35' 8"	31' 1"
1400S162-54	50	26' 4" e	22' 10" e	18' 8" e	25' 8" e	21' 2" e	15' 9" e	25' 10" e	22' 10" e	18' 8" e	25' 8" e	21' 2" e	15' 9" e
1400S200-54	50	28' 8" e	24' 10" e	20' 3" e	26' 4" e	21' 8" e	16' 0" e	26' 11" e	24' 5" e	20' 3" e	26' 4" e	21' 8" e	16' 0" e
1400S250-54	50	29' 10" e	25' 10" e	21' 1" e	26' 8" e	21' 10" e	16' 2" e	28' 0" e	25' 4" e	21' 1" e	26' 8" e	21' 10" e	16' 2" e
1400S300-54	50	30' 6" e	26' 5" e	21' 7" e	26' 10" e	22' 0" e	16' 2" e	28' 10" e	26' 1" e	21' 7" e	26' 10" e	22' 0" e	16' 2" e
1400S350-54	50	33' 8" e	29' 8" e	23' 6" e	28' 10" e	23' 4" e	16' 11" e	30' 10" e	28' 0" e	23' 6" e	28' 10" e	23' 4" e	16' 11" e
1400S162-68	50	30' 11"	27' 4"	22' 4"	31' 6"	27' 4"	22' 4"	28' 3"	25' 8"	22' 3"	31' 6"	27' 4"	22' 4"
1400S200-68	50	32' 3"	29' 2"	24' 1" e	34' 1"	29' 6"	23' 5"	29' 5"	26' 8"	23' 2"	32' 10"	29' 6"	23' 5"
1400S250-68	50	33' 5"	30' 4"	25' 0" e	35' 4"	30' 0"	23' 7"	30' 6"	27' 8"	24' 1" e	34' 1"	30' 0"	23' 7"
1400S300-68	50	34' 6"	31' 2"	25' 7" e	35' 10"	30' 5"	23' 10"	31' 6"	28' 7"	24' 10" e	35' 2"	30' 5"	23' 10"
1400S350-68	50	36' 7"	33' 3"	28' 7" e	39' 11"	33' 8"	26' 1"	33' 3"	30' 2"	26' 4" e	37' 3"	33' 8"	26' 1"
1400S162-97	50	35' 3"	32' 0"	27' 10"	39' 5"	35' 9"	29' 2"	32' 0"	29' 1"	25' 5"	36' 0"	32' 7"	28' 5"
1400S200-97	50	36' 7"	33' 3"	29' 0"	41' 0"	37' 2"	31' 4"	33' 3"	30' 2"	26' 5"	37' 4"	33' 11"	29' 6"
1400S250-97	50	37' 11"	34' 5"	30' 0"	42' 5"	38' 6"	32' 5"	34' 5"	31' 3"	27' 4"	38' 8"	35' 1"	30' 7"
1400S300-97	50	39' 1"	35' 6"	31' 0"	43' 10"	39' 9"	33' 3"	35' 6"	32' 3"	28' 2"	39' 11"	36' 3"	31' 7"
1400S350-97	50	40' 11"	37' 2"	32' 5"	45' 11"	41' 8"	36' 5"	37' 2"	33' 9"	29' 6"	41' 8"	37' 11"	33' 1"
1400S162-118	50	37' 5"	34' 0"	29' 8"	42' 0"	38' 2"	33' 4"	34' 0"	30' 11"	27' 0"	38' 2"	34' 8"	30' 3"
1400S200-118	50	38' 10"	35' 4"	30' 10"	43' 8"	39' 8"	34' 8"	35' 4"	32' 1"	28' 0"	39' 8"	36' 0"	31' 6"
1400S250-118	50	40' 3"	36' 7"	31' 11"	45' 2"	41' 1"	35' 10"	36' 7"	33' 3"	29' 0"	41' 1"	37' 4"	32' 7"
1400S300-118	50	41' 7"	37' 9"	33' 0"	46' 8"	42' 5"	37' 0"	37' 9"	34' 4"	30' 0"	42' 5"	38' 6"	33' 8"
1400S350-118	50	43' 6"	39' 6"	34' 6"	48' 10"	44' 4"	38' 9"	39' 6"	35' 11"	31' 4"	44' 4"	40' 4"	35' 2"
1600S162-68	50	33' 0" e	28' 7" e	23' 4" e	33' 0" e	28' 7" e	22' 10" e	31' 5" e	28' 5" e	23' 4" e	33' 0" e	28' 7" e	22' 10" e
1600S200-68	50	35' 8" e	31' 0" e	25' 4" e	35' 10" e	30' 10" e	23' 8" e	32' 7" e	29' 6" e	25' 4" e	35' 10" e	30' 10" e	23' 8" e
1600S250-68	50	37' 0" e	32' 4" e	26' 5" e	36' 10" e	30' 11" e	23' 9" e	33' 9" e	30' 7" e	26' 5" e	36' 10" e	30' 11" e	23' 9" e
1600S300-68	50	38' 1" e	33' 3" e	27' 2" e	37' 3" e	31' 3" e	24' 0" e	34' 10" e	31' 7" e	27' 2" e	37' 3" e	31' 3" e	24' 0" e
1600S350-68	50	40' 0" e	36' 3" e	30' 5" e	40' 5" e	33' 8" e	25' 7" e	36' 6" e	33' 1" e	28' 10" e	40' 5" e	33' 8" e	25' 7" e
1600S162-97	50	39' 4"	35' 8"	30' 10"	43' 8"	37' 9"	30' 10"	35' 11"	32' 7"	28' 4"	40' 1"	36' 4"	30' 10"
1600S200-97	50	40' 10"	37' 0"	32' 2"	45' 7"	40' 7"	33' 2"	37' 3"	33' 9"	29' 5"	41' 7"	37' 8"	32' 10"
1600S250-97	50	42' 2"	38' 3"	33' 4"	47' 2"	42' 3"	34' 6"	38' 6"	34' 11"	30' 5"	43' 0"	39' 0"	34' 0"
1600S300-97	50	43' 6"	39' 5"	34' 4"	48' 7"	43' 5"	35' 5"	39' 7"	36' 0"	31' 4"	44' 4"	40' 3"	35' 0"
1600S350-97	50	45' 5"	41' 3"	35' 11"	50' 10"	46' 1"	39' 1"	41' 4"	37' 7"	32' 9"	46' 4"	42' 0"	36' 8"
1600S162-118	50	42' 1"	38' 2"	33' 4"	47' 2"	42' 10"	35' 11"	38' 2"	34' 8"	30' 4"	42' 11"	39' 0"	34' 0"
1600S200-118	50	43' 7"	39' 7"	34' 7"	48' 11"	44' 4"	38' 6"	39' 7"	35' 11"	31' 5"	44' 5"	40' 4"	35' 3"
1600S250-118	50	45' 0"	40' 11"	35' 9"	50' 6"	45' 11"	40' 0"	40' 11"	37' 2"	32' 5"	45' 11"	41' 9"	36' 5"
1600S300-118	50	46' 4"	42' 2"	36' 10"	52' 1"	47' 4"	41' 1"	42' 2"	38' 3"	33' 5"	47' 4"	43' 0"	37' 7"
1600S350-118	50	48' 5"	44' 0"	38' 5"	54' 4"	49' 5"	43' 1"	44' 0"	40' 0"	34' 11"	49' 5"	44' 11"	39' 2"

" e " Requires web stiffeners at end supports
Web stiffeners required at all interior supports for 2-span conditions.

Web Stiffener: Clip Angle

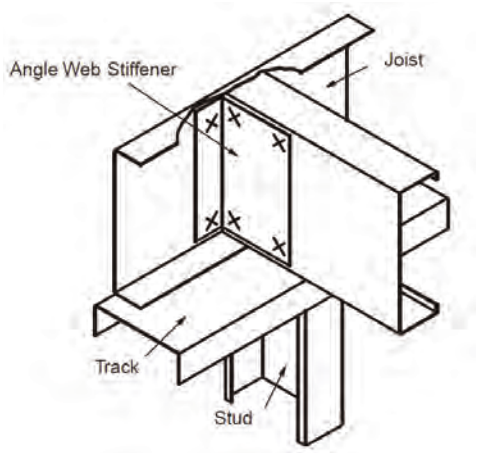

Web Stiffener: Joist Reinforcement

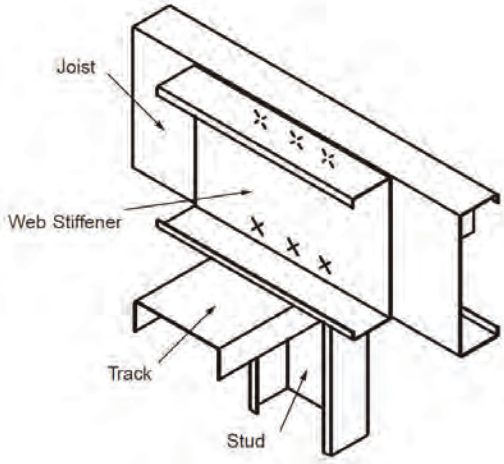

Floor Joist Span Tables

See Allowable Floor Joist Span Table Notes on page 29.

10 psf Dead Load and 50 psf Live Load

Complies with 2009 & 2012 International Building Code (IBC)

10 psf Dead Load and 50 psf Live Load													
Section	F_y	L/360 Live Load Deflection						L/480 Live Load Deflection					
		Single Span			Two Equal Spans			Single Span			Two Equal Spans		
		Spacing (in)			Spacing (in)			Spacing (in)			Spacing (in)		
	(ksi)	12	16	24	12	16	24	12	16	24	12	16	24
600S162-33	33	10' 3" e	8' 11" e	7' 3" e	10' 1"	8' 5" e	6' 5" e	10' 3" e	8' 11" e	7' 3" e	10' 1"	8' 5" e	6' 5" e
600S200-33	33	10' 11" e	9' 6" e	7' 9" e	10' 5"	8' 8" e	6' 7" e	10' 11" e	9' 6" e	7' 9" e	10' 5"	8' 8" e	6' 7" e
600S162-43	33	12' 8"	11' 0" e	9' 0" e	12' 8"	11' 0"	8' 10"	11' 6"	10' 5" e	9' 0" e	12' 8"	11' 0"	8' 10"
600S200-43	33	13' 1"	11' 4" e	9' 3" e	13' 1"	11' 4"	9' 0" e	12' 1"	11' 0" e	9' 3" e	13' 1"	11' 4"	9' 0" e
600S250-43	33	13' 5" e	11' 7" e	9' 6" e	13' 5"	11' 7"	9' 2" e	12' 8"	11' 6" e	9' 6" e	13' 5"	11' 7"	9' 2" e
600S162-54	50	13' 7"	12' 4"	10' 9"	15' 3"	13' 10"	12' 0"	12' 4"	11' 2"	9' 9"	13' 10"	12' 7"	11' 0"
600S200-54	50	14' 3"	13' 0"	11' 4"	16' 0"	14' 7"	12' 2"	13' 0"	11' 9"	10' 3"	14' 7"	13' 3"	11' 7"
600S250-54	50	14' 11"	13' 7"	11' 10"	16' 9"	15' 3"	12' 6"	13' 7"	12' 4"	10' 9"	15' 3"	13' 10"	12' 1"
600S162-68	50	14' 7"	13' 3"	11' 7"	16' 4"	14' 10"	13' 0"	13' 3"	12' 0"	10' 6"	14' 10"	13' 6"	11' 9"
600S200-68	50	15' 4"	13' 11"	12' 2"	17' 2"	15' 7"	13' 8"	13' 11"	12' 8"	11' 0"	15' 7"	14' 2"	12' 5"
600S250-68	50	16' 1"	14' 7"	12' 9"	18' 0"	16' 4"	14' 4"	14' 7"	13' 3"	11' 7"	16' 4"	14' 10"	13' 0"
600S162-97	50	16' 2"	14' 8"	12' 10"	18' 1"	16' 5"	14' 4"	14' 8"	13' 4"	11' 8"	16' 5"	14' 11"	13' 1"
600S200-97	50	17' 0"	15' 5"	13' 6"	19' 1"	17' 4"	15' 2"	15' 5"	14' 0"	12' 3"	17' 4"	15' 9"	13' 9"
600S250-97	50	17' 10"	16' 3"	14' 2"	20' 0"	18' 2"	15' 11"	16' 3"	14' 9"	12' 10"	18' 2"	16' 6"	14' 5"
600S162-118	50	17' 0"	15' 6"	13' 6"	19' 1"	17' 4"	15' 2"	15' 6"	14' 1"	12' 3"	17' 4"	15' 9"	13' 9"
600S200-118	50	18' 0"	16' 4"	14' 3"	20' 2"	18' 4"	16' 0"	16' 4"	14' 10"	13' 0"	18' 4"	16' 8"	14' 7"
600S250-118	50	18' 11"	17' 2"	15' 0"	21' 3"	19' 3"	16' 10"	17' 2"	15' 7"	13' 7"	19' 3"	17' 6"	15' 4"
800S162-33	33	11' 10" e	10' 3" e	7' 11" e	9' 10" e	8' 0" e	5' 9" e	11' 10" e	10' 3" e	7' 11" e	9' 10" e	8' 0" e	5' 9" e
800S200-33	33	12' 8" e	11' 0" e	7' 11" e	10' 3" e	8' 2" e	5' 10" e	12' 8" e	11' 0" e	7' 11" e	10' 3" e	8' 2" e	5' 10" e
800S162-43	33	14' 3" e	12' 4" e	10' 1" e	13' 11"	11' 9"	9' 2" e	14' 3" e	12' 4" e	10' 1" e	13' 11"	11' 9"	9' 2" e
800S200-43	33	15' 3" e	13' 3" e	10' 10" e	15' 3"	12' 11" e	10' 0" e	15' 2" e	13' 3" e	10' 10" e	15' 3"	12' 11" e	10' 0" e
800S250-43	33	15' 8" e	13' 7" e	11' 1" e	15' 6"	13' 0" e	10' 0" e	15' 8" e	13' 7" e	11' 1" e	15' 6"	13' 0" e	10' 0" e
800S162-54	50	17' 1"	15' 6"	13' 6"	19' 1"	16' 6"	13' 5"	15' 7"	14' 1"	12' 4"	17' 5"	15' 10"	13' 5"
800S200-54	50	17' 11"	16' 3"	14' 3"	20' 1"	17' 8"	14' 5"	16' 3"	14' 9"	12' 11"	18' 3"	16' 7"	14' 5"
800S250-54	50	18' 8"	17' 0"	14' 9" e	20' 10"	18' 1"	14' 8"	17' 0"	15' 5"	13' 6"	19' 1"	17' 4"	14' 8"
800S162-68	50	18' 4"	16' 8"	14' 7"	20' 7"	18' 9"	15' 10"	16' 8"	15' 2"	13' 3"	18' 9"	17' 0"	14' 10"
800S200-68	50	19' 3"	17' 6"	15' 3"	21' 7"	19' 7"	17' 2"	17' 6"	15' 11"	13' 10"	19' 7"	17' 10"	15' 7"
800S250-68	50	20' 1"	18' 3"	15' 11"	22' 7"	20' 6"	17' 3"	18' 3"	16' 7"	14' 6"	20' 6"	18' 7"	16' 3"
800S162-97	50	20' 5"	18' 6"	16' 2"	22' 11"	20' 10"	18' 2"	18' 6"	16' 10"	14' 9"	20' 10"	18' 11"	16' 6"
800S200-97	50	21' 5"	19' 5"	17' 0"	24' 0"	21' 10"	19' 1"	19' 5"	17' 8"	15' 5"	21' 10"	19' 10"	17' 4"
800S250-97	50	22' 4"	20' 4"	17' 9"	25' 1"	22' 10"	19' 11"	20' 4"	18' 5"	16' 1"	22' 10"	20' 9"	18' 1"
800S162-118	50	21' 7"	19' 7"	17' 2"	24' 3"	22' 0"	19' 3"	19' 7"	17' 10"	15' 7"	22' 0"	20' 0"	17' 6"
800S200-118	50	22' 8"	20' 7"	18' 0"	25' 5"	23' 1"	20' 2"	20' 7"	18' 8"	16' 4"	23' 1"	21' 0"	18' 4"
800S250-118	50	23' 8"	21' 6"	18' 10"	26' 7"	24' 2"	21' 2"	21' 6"	19' 7"	17' 1"	24' 2"	22' 0"	19' 2"
1000S162-43	33	15' 10" e	13' 8" e	11' 2" e	14' 8" e	12' 2" e	9' 1" e	15' 10" e	13' 8" e	11' 2" e	14' 8" e	12' 2" e	9' 1" e
1000S200-43	33	17' 1" e	14' 9" e	12' 1" e	15' 4" e	12' 7" e	9' 4" e	17' 1" e	14' 9" e	12' 1" e	15' 4" e	12' 7" e	9' 4" e
1000S250-43	33	17' 6" e	15' 2" e	12' 5" e	15' 10" e	13' 0" e	9' 7" e	17' 6" e	15' 2" e	12' 5" e	15' 10" e	13' 0" e	9' 7" e
1000S162-54	50	20' 4"	18' 4"	15' 0" e	21' 2"	18' 2"	14' 2"	18' 6"	16' 10"	14' 7" e	20' 8"	18' 2"	14' 2"
1000S200-54	50	21' 3"	19' 3"	16' 1" e	22' 2"	18' 9"	14' 7"	19' 4"	17' 7"	15' 3" e	21' 8"	18' 9"	14' 7"
1000S250-54	50	22' 4"	20' 3"	16' 6" e	23' 1"	19' 6"	15' 1"	20' 3"	18' 5"	16' 1" e	22' 9"	19' 6"	15' 1"
1000S162-68	50	22' 1"	20' 0"	17' 5"	24' 8"	21' 8"	17' 8"	20' 1"	18' 3"	15' 11"	22' 6"	20' 5"	17' 8"
1000S200-68	50	23' 0"	20' 11"	18' 3"	25' 9"	23' 2"	18' 11"	20' 11"	19' 0"	16' 7"	23' 6"	21' 4"	18' 7"
1000S250-68	50	24' 0"	21' 9"	19' 0"	26' 11"	23' 10"	19' 5"	21' 9"	19' 9"	17' 3"	24' 5"	22' 3"	19' 5"
1000S162-97	50	24' 7"	22' 4"	19' 6"	27' 7"	25' 1"	21' 11"	22' 4"	20' 3"	17' 9"	25' 1"	22' 9"	19' 11"
1000S200-97	50	25' 8"	23' 4"	20' 4"	28' 10"	26' 2"	22' 10"	23' 4"	21' 2"	18' 6"	26' 2"	23' 9"	20' 9"
1000S250-97	50	26' 9"	24' 3"	21' 2"	30' 0"	27' 3"	23' 10"	24' 3"	22' 1"	19' 3"	27' 3"	24' 9"	21' 8"
1000S162-118	50	26' 0"	23' 8"	20' 8"	29' 3"	26' 7"	23' 2"	23' 8"	21' 6"	18' 9"	26' 7"	24' 1"	21' 1"
1000S200-118	50	27' 3"	24' 9"	21' 7"	30' 7"	27' 9"	24' 3"	24' 9"	22' 6"	19' 7"	27' 9"	25' 3"	22' 0"
1000S250-118	50	28' 4"	25' 9"	22' 6"	31' 10"	28' 11"	25' 3"	25' 9"	23' 5"	20' 5"	28' 11"	26' 3"	22' 11"

" e " Requires web stiffeners at end supports
Web stiffeners required at all interior supports for 2-span conditions.

Floor Joist Span Tables

See Allowable Floor Joist Span Table Notes on page 29.

10 psf Dead Load and 50 psf Live Load

Complies with 2009 & 2012 International Building Code (IBC)

10 psf Dead Load and 50 psf Live Load													
Section	F_y	L/360 Live Load Deflection						L/480 Live Load Deflection					
		Single Span			Two Equal Spans			Single Span			Two Equal Spans		
		Spacing (in)			Spacing (in)			Spacing (in)			Spacing (in)		
	(ksi)	12	16	24	12	16	24	12	16	24	12	16	24
1200S162-54	50	22' 10" e	19' 9" e	16' 1" e	22' 5" e	18' 9" e	14' 2" e	21' 4" e	19' 4" e	16' 1" e	22' 5" e	18' 9" e	14' 2" e
1200S200-54	50	24' 4" e	21' 4" e	17' 5" e	23' 2" e	19' 3" e	14' 6" e	22' 3" e	20' 2" e	17' 5" e	23' 2" e	19' 3" e	14' 6" e
1200S250-54	50	25' 4" e	22' 1" e	18' 0" e	23' 5" e	19' 6" e	14' 8" e	23' 1" e	21' 0" e	18' 0" e	23' 5" e	19' 6" e	14' 8" e
1200S162-68	50	25' 6"	23' 1"	19' 2"	27' 1"	23' 6"	19' 2"	23' 3"	21' 1"	18' 4"	25' 11"	23' 6"	19' 2"
1200S200-68	50	26' 6"	24' 1"	20' 7" e	29' 2"	25' 3"	20' 4"	24' 2"	21' 11"	19' 1"	27' 1"	24' 6"	20' 4"
1200S250-68	50	27' 7"	25' 0"	21' 3" e	30' 1"	25' 9"	20' 5"	25' 2"	22' 10"	19' 10"	28' 1"	25' 6"	20' 5"
1200S162-97	50	28' 8"	26' 1"	22' 9"	32' 2"	29' 3"	24' 10"	26' 1"	23' 8"	20' 8"	29' 3"	26' 7"	23' 3"
1200S200-97	50	29' 10"	27' 1"	23' 8"	33' 6"	30' 5"	26' 7"	27' 1"	24' 8"	21' 6"	30' 5"	27' 8"	24' 2"
1200S250-97	50	31' 0"	28' 2"	24' 7"	34' 9"	31' 7"	27' 5"	28' 2"	25' 7"	22' 4"	31' 7"	28' 9"	25' 1"
1200S162-118	50	30' 5"	27' 7"	24' 2"	34' 2"	31' 0"	27' 1"	27' 7"	25' 1"	21' 11"	31' 0"	28' 2"	24' 7"
1200S200-118	50	31' 8"	28' 9"	25' 2"	35' 7"	32' 4"	28' 3"	28' 9"	26' 2"	22' 10"	32' 4"	29' 4"	25' 8"
1200S250-118	50	32' 11"	29' 11"	26' 1"	36' 11"	33' 7"	29' 4"	29' 11"	27' 2"	23' 9"	33' 7"	30' 6"	26' 8"
1200S300-118	50	34' 0"	30' 11"	27' 0"	38' 3"	34' 9"	30' 4"	30' 11"	28' 1"	24' 7"	34' 9"	31' 7"	27' 7"
1200S350-118	50	35' 8"	32' 5"	28' 4"	40' 1"	36' 5"	31' 10"	32' 5"	29' 5"	25' 9"	36' 5"	33' 1"	28' 11"
1400S162-54	50	24' 1" e	20' 10" e	17' 0" e	22' 9" e	18' 7" e	13' 8" e	24' 0" e	20' 10" e	17' 0" e	22' 9" e	18' 7" e	13' 8" e
1400S200-54	50	26' 2" e	22' 8" e	18' 6" e	23' 4" e	19' 0" e	13' 10" e	25' 0" e	22' 8" e	18' 6" e	23' 4" e	19' 0" e	13' 10" e
1400S250-54	50	27' 2" e	23' 7" e	19' 3" e	23' 7" e	19' 2" e	13' 11" e	25' 11" e	23' 6" e	19' 3" e	23' 7" e	19' 2" e	13' 11" e
1400S300-54	50	27' 10" e	24' 1" e	19' 7" e	23' 9" e	19' 3" e	14' 0" e	26' 9" e	24' 1" e	19' 7" e	23' 9" e	19' 3" e	14' 0" e
1400S350-54	50	31' 2" e	27' 1" e	19' 7" e	25' 3" e	20' 3" e	14' 6" e	28' 7" e	25' 11" e	19' 7" e	25' 3" e	20' 3" e	14' 6" e
1400S162-68	50	28' 8"	24' 11"	20' 4" e	28' 9"	24' 11"	20' 1"	26' 3"	23' 9"	20' 4" e	28' 9"	24' 11"	20' 1"
1400S200-68	50	29' 11"	26' 11"	22' 0" e	31' 1"	26' 10"	20' 11"	27' 3"	24' 9"	21' 6" e	30' 5"	26' 10"	20' 11"
1400S250-68	50	31' 0"	27' 11"	22' 10" e	31' 11"	27' 0"	21' 0"	28' 4"	25' 8"	22' 4" e	31' 7"	27' 0"	21' 0"
1400S300-68	50	32' 0"	28' 7"	23' 4" e	32' 4"	27' 3"	21' 3"	29' 3"	26' 6"	23' 0" e	32' 4"	27' 3"	21' 3"
1400S350-68	50	33' 11"	30' 10" e	26' 1" e	35' 11"	30' 1"	23' 1"	30' 10"	28' 0"	24' 6" e	34' 7"	30' 1"	23' 1"
1400S162-97	50	32' 9"	29' 8"	25' 10"	36' 7"	32' 8"	26' 8"	29' 9"	27' 0"	23' 7"	33' 4"	30' 3"	26' 4"
1400S200-97	50	34' 0"	30' 10"	26' 10"	38' 0"	34' 6"	28' 7"	30' 10"	28' 1"	24' 6"	34' 8"	31' 5"	27' 5"
1400S250-97	50	35' 2"	31' 11"	27' 10"	39' 5"	35' 9"	29' 7"	31' 11"	29' 0"	25' 4"	35' 11"	32' 7"	28' 5"
1400S300-97	50	36' 3"	33' 0"	28' 9"	40' 8"	36' 11"	30' 4"	33' 0"	29' 11"	26' 2"	37' 0"	33' 8"	29' 4"
1400S350-97	50	37' 11"	34' 6"	30' 1"	42' 7"	38' 8"	33' 5"	34' 6"	31' 4"	27' 4"	38' 8"	35' 2"	30' 9"
1400S162-118	50	34' 9"	31' 7"	27' 7"	39' 0"	35' 5"	30' 11"	31' 7"	28' 8"	25' 1"	35' 5"	32' 2"	28' 1"
1400S200-118	50	36' 1"	32' 9"	28' 8"	40' 6"	36' 10"	32' 2"	32' 9"	29' 9"	26' 0"	36' 10"	33' 5"	29' 2"
1400S250-118	50	37' 4"	33' 11"	29' 8"	41' 11"	38' 1"	33' 4"	33' 11"	30' 10"	26' 11"	38' 1"	34' 8"	30' 3"
1400S300-118	50	38' 7"	35' 1"	30' 7"	43' 4"	39' 4"	34' 4"	35' 1"	31' 10"	27' 10"	39' 4"	35' 9"	31' 3"
1400S350-118	50	40' 4"	36' 8"	32' 0"	45' 4"	41' 2"	36' 0"	36' 8"	33' 4"	29' 1"	41' 2"	37' 5"	32' 8"
1600S162-68	50	30' 2" e	26' 1" e	21' 4" e	30' 2" e	26' 1" e	20' 3" e	29' 1" e	26' 1" e	21' 4" e	30' 2" e	26' 1" e	20' 3" e
1600S200-68	50	32' 8" e	28' 4" e	23' 2" e	32' 8" e	27' 5" e	20' 11" e	30' 3" e	27' 5" e	23' 2" e	32' 8" e	27' 5" e	20' 11" e
1600S250-68	50	34' 1" e	29' 6" e	24' 1" e	33' 0" e	27' 7" e	21' 0" e	31' 4" e	28' 5" e	24' 1" e	33' 0" e	27' 7" e	21' 0" e
1600S300-68	50	35' 1" e	30' 4" e	24' 9" e	33' 4" e	27' 10" e	21' 2" e	32' 4" e	29' 4" e	24' 9" e	33' 4" e	27' 10" e	21' 2" e
1600S350-68	50	37' 1" e	33' 8" e	27' 9" e	36' 1" e	29' 10" e	22' 5" e	33' 10" e	30' 8" e	26' 9" e	36' 1" e	29' 10" e	22' 5" e
1600S162-97	50	36' 6"	33' 1"	28' 2"	39' 10"	34' 6"	28' 2"	33' 4"	30' 3"	26' 4"	37' 2"	33' 8"	28' 2"
1600S200-97	50	37' 10"	34' 4"	29' 10"	42' 3"	37' 1"	30' 3"	34' 6"	31' 4"	27' 3"	38' 7"	35' 0"	30' 3"
1600S250-97	50	39' 2"	35' 6"	30' 11"	43' 9"	38' 7"	31' 6"	35' 8"	32' 5"	28' 2"	39' 11"	36' 2"	31' 6"
1600S300-97	50	40' 4"	36' 7"	31' 11"	45' 1"	39' 7"	32' 4"	36' 9"	33' 4"	29' 1"	41' 2"	37' 4"	32' 4"
1600S350-97	50	42' 2"	38' 3"	33' 4"	47' 2"	42' 9"	35' 5"	38' 5"	34' 10"	30' 5"	43' 0"	39' 0"	34' 0"
1600S162-118	50	39' 0"	35' 6"	30' 11"	43' 9"	39' 8"	32' 10"	35' 6"	32' 3"	28' 2"	39' 10"	36' 2"	31' 7"
1600S200-118	50	40' 5"	36' 9"	32' 1"	45' 5"	41' 2"	35' 1"	36' 9"	33' 4"	29' 2"	41' 3"	37' 6"	32' 9"
1600S250-118	50	41' 9"	37' 11"	33' 2"	46' 11"	42' 7"	36' 6"	37' 11"	34' 6"	30' 2"	42' 7"	38' 9"	33' 10"
1600S300-118	50	43' 1"	39' 1"	34' 2"	48' 4"	43' 11"	37' 6"	39' 1"	35' 6"	31' 0"	43' 11"	39' 11"	34' 10"
1600S350-118	50	44' 11"	40' 10"	35' 8"	50' 6"	45' 10"	40' 0"	40' 10"	37' 1"	32' 5"	45' 10"	41' 8"	36' 5"

" e " Requires web stiffeners at end supports
Web stiffeners required at all interior supports for 2-span conditions.

Floor Joist Span Tables

See Allowable Floor Joist Span Table Notes on page 29.

15 psf Dead Load and 125 psf Live Load

Complies with 2009 & 2012 International Building Code (IBC)

15 psf Dead Load and 125 psf Live Load													
Section	F_y	L/360 Live Load Deflection						L/480 Live Load Deflection					
		Single Span			Two Equal Spans			Single Span			Two Equal Spans		
		Spacing (in)			Spacing (in)			Spacing (in)			Spacing (in)		
	(ksi)	12	16	24	12	16	24	12	16	24	12	16	24
600S162-33	33	6' 9" e	5' 10" e	4' 7" e	5' 9" e	4' 8" e	3' 4" e	6' 9" e	5' 10" e	4' 7" e	5' 9" e	4' 8" e	3' 4" e
600S200-33	33	7' 2" e	6' 2" e	4' 7" e	5' 11" e	4' 9" e	3' 4" e	7' 2" e	6' 2" e	4' 7" e	5' 11" e	4' 9" e	3' 4" e
600S162-43	33	8' 4" e	7' 2" e	5' 10" e	8' 1" e	6' 9" e	5' 2" e	8' 4" e	7' 2" e	5' 10" e	8' 1" e	6' 9" e	5' 2" e
600S200-43	33	8' 7" e	7' 5" e	6' 1" e	8' 2" e	6' 10" e	5' 3" e	8' 7" e	7' 5" e	6' 1" e	8' 2" e	6' 10" e	5' 3" e
600S250-43	33	8' 9" e	7' 7" e	6' 3" e	8' 4" e	7' 0" e	5' 4" e	8' 9" e	7' 7" e	6' 3" e	8' 4" e	7' 0" e	5' 4" e
600S162-54	50	10' 0"	9' 1"	7' 10" e	11' 1"	9' 5"	7' 4"	9' 1"	8' 3"	7' 3" e	10' 2"	9' 3"	7' 4"
600S200-54	50	10' 6"	9' 7"	8' 1" e	11' 2"	9' 5"	7' 4"	9' 7"	8' 8"	7' 7" e	10' 9"	9' 5"	7' 4"
600S250-54	50	11' 0"	10' 0" e	8' 3" e	11' 5"	9' 8"	7' 6"	10' 0"	9' 1"	7' 11" e	11' 3"	9' 8"	7' 6"
600S162-68	50	10' 9"	9' 9"	8' 6"	12' 0"	10' 11"	8' 11"	9' 9"	8' 10"	7' 9"	10' 11"	9' 11"	8' 8"
600S200-68	50	11' 3"	10' 3"	8' 11"	12' 8"	11' 6"	9' 3"	10' 3"	9' 4"	8' 2"	11' 6"	10' 5"	9' 2"
600S250-68	50	11' 10"	10' 9"	9' 5"	13' 3"	11' 5"	9' 1"	10' 9"	9' 9"	8' 6"	12' 1"	10' 11"	9' 1"
600S162-97	50	11' 11"	10' 10"	9' 5"	13' 4"	12' 1"	10' 7"	10' 10"	9' 10"	8' 7"	12' 1"	11' 0"	9' 7"
600S200-97	50	12' 6"	11' 4"	9' 11"	14' 1"	12' 9"	11' 2"	11' 4"	10' 4"	9' 0"	12' 9"	11' 7"	10' 2"
600S250-97	50	13' 2"	11' 11"	10' 5"	14' 9"	13' 5"	11' 9"	11' 11"	10' 10"	9' 6"	13' 5"	12' 2"	10' 8"
600S162-118	50	12' 7"	11' 5"	10' 0"	14' 1"	12' 10"	11' 2"	11' 5"	10' 4"	9' 1"	12' 10"	11' 8"	10' 2"
600S200-118	50	13' 3"	12' 0"	10' 6"	14' 10"	13' 6"	11' 10"	12' 0"	10' 11"	9' 7"	13' 6"	12' 3"	10' 9"
600S250-118	50	13' 11"	12' 8"	11' 1"	15' 8"	14' 2"	12' 5"	12' 8"	11' 6"	10' 0"	14' 2"	12' 11"	11' 3"
800S162-33	33	6' 9" e	5' 1" e	3' 5" e	5' 0" e	3' 11" e	2' 8" e	6' 9" e	5' 1" e	3' 5" e	5' 0" e	3' 11" e	2' 8" e
800S200-33	33	6' 9" e	5' 1" e	3' 5" e	5' 1" e	3' 11" e	2' 8" e	6' 9" e	5' 1" e	3' 5" e	5' 1" e	3' 11" e	2' 8" e
800S162-43	33	9' 4" e	8' 1" e	6' 7" e	8' 4" e	6' 10" e	5' 1" e	9' 4" e	8' 1" e	6' 7" e	8' 4" e	6' 10" e	5' 1" e
800S200-43	33	10' 0" e	8' 8" e	7' 1" e	9' 0" e	7' 4" e	5' 4" e	10' 0" e	8' 8" e	7' 1" e	9' 0" e	7' 4" e	5' 4" e
800S250-43	33	10' 3" e	8' 11" e	7' 3" e	9' 0" e	7' 4" e	5' 4" e	10' 3" e	8' 11" e	7' 3" e	9' 0" e	7' 4" e	5' 4" e
800S162-54	50	12' 6" e	10' 10" e	8' 10" e	12' 3"	10' 4"	8' 1"	11' 5"	10' 4" e	8' 10" e	12' 3"	10' 4"	8' 1"
800S200-54	50	13' 2" e	11' 7" e	9' 5" e	13' 4"	11' 2"	8' 7" e	12' 0"	10' 11" e	9' 5" e	13' 4"	11' 2"	8' 7" e
800S250-54	50	13' 8" e	11' 10" e	9' 8" e	13' 5"	11' 3"	8' 8" e	12' 6" e	11' 4" e	9' 8" e	13' 5"	11' 3"	8' 8" e
800S162-68	50	13' 6"	12' 4"	10' 4" e	14' 8"	12' 8"	10' 1"	12' 4"	11' 2"	9' 9" e	13' 10"	12' 7"	10' 1"
800S200-68	50	14' 2"	12' 11"	11' 3" e	15' 11"	14' 0"	11' 3"	12' 11"	11' 8"	10' 3" e	14' 5"	13' 2"	11' 3"
800S250-68	50	14' 10"	13' 5"	11' 4" e	16' 0"	13' 10"	11' 0"	13' 5"	12' 3"	10' 8" e	15' 1"	13' 9"	11' 0"
800S162-97	50	15' 0"	13' 8"	11' 11"	16' 11"	15' 4"	12' 8"	13' 8"	12' 5"	10' 10"	15' 4"	13' 11"	12' 2"
800S200-97	50	15' 9"	14' 4"	12' 6"	17' 8"	16' 1"	14' 1"	14' 4"	13' 0"	11' 4"	16' 1"	14' 7"	12' 9"
800S250-97	50	16' 6"	15' 0"	13' 1"	18' 6"	16' 10"	14' 8"	15' 0"	13' 7"	11' 11"	16' 10"	15' 3"	13' 4"
800S162-118	50	15' 11"	14' 5"	12' 7"	17' 10"	16' 3"	14' 2"	14' 5"	13' 2"	11' 6"	16' 3"	14' 9"	12' 11"
800S200-118	50	16' 8"	15' 2"	13' 3"	18' 9"	17' 0"	14' 11"	15' 2"	13' 9"	12' 0"	17' 0"	15' 6"	13' 6"
800S250-118	50	17' 6"	15' 10"	13' 10"	19' 7"	17' 10"	15' 7"	15' 10"	14' 5"	12' 7"	17' 10"	16' 2"	14' 2"
1000S162-43	33	10' 4" e	8' 11" e	6' 0" e	8' 1" e	6' 5" e	4' 6" e	10' 4" e	8' 11" e	6' 0" e	8' 1" e	6' 5" e	4' 6" e
1000S200-43	33	11' 2" e	8' 11" e	6' 0" e	8' 3" e	6' 6" e	4' 7" e	11' 2" e	8' 11" e	6' 0" e	8' 3" e	6' 6" e	4' 7" e
1000S250-43	33	11' 6" e	8' 11" e	6' 0" e	8' 5" e	6' 7" e	4' 7" e	11' 6" e	8' 11" e	6' 0" e	8' 5" e	6' 7" e	4' 7" e
1000S162-54	50	13' 10" e	12' 0" e	9' 10" e	12' 10"	10' 7"	7' 11"	13' 7" e	12' 0" e	9' 10" e	12' 10"	10' 7"	7' 11"
1000S200-54	50	14' 11" e	12' 11" e	10' 6" e	13' 3"	10' 10"	8' 0" e	14' 2" e	12' 10" e	10' 6" e	13' 3"	10' 10"	8' 0" e
1000S250-54	50	15' 4" e	13' 3" e	10' 10" e	13' 8"	11' 2"	8' 2" e	14' 11" e	13' 3" e	10' 10" e	13' 8"	11' 2"	8' 2" e
1000S162-68	50	16' 2"	14' 2" e	11' 7" e	16' 5"	14' 2"	11' 2"	14' 9"	13' 5"	11' 7" e	16' 5"	14' 2"	11' 2"
1000S200-68	50	16' 11"	15' 2" e	12' 5" e	17' 6"	14' 10"	11' 8"	15' 5"	14' 0" e	12' 2" e	17' 3"	14' 10"	11' 8"
1000S250-68	50	17' 8"	15' 7" e	12' 9" e	18' 0"	15' 7"	12' 4" e	16' 1"	14' 7" e	12' 9" e	18' 0"	15' 7"	12' 4" e
1000S162-97	50	18' 1"	16' 5"	14' 4"	20' 4"	18' 2"	14' 9"	16' 5"	14' 11"	13' 1"	18' 6"	16' 9"	14' 8"
1000S200-97	50	18' 11"	17' 2"	15' 0"	21' 3"	19' 3"	15' 8"	17' 2"	15' 7"	13' 8"	19' 3"	17' 6"	15' 4"
1000S250-97	50	19' 8"	17' 11"	15' 8"	22' 1"	20' 1"	16' 11"	17' 11"	16' 3"	14' 2"	20' 1"	18' 3"	15' 11"
1000S162-118	50	19' 2"	17' 5"	15' 3"	21' 6"	19' 7"	16' 7"	17' 5"	15' 10"	13' 10"	19' 7"	17' 9"	15' 6"
1000S200-118	50	20' 1"	18' 3"	15' 11"	22' 6"	20' 5"	17' 8"	18' 3"	16' 7"	14' 5"	20' 5"	18' 7"	16' 3"
1000S250-118	50	20' 11"	19' 0"	16' 7"	23' 5"	21' 4"	18' 7"	19' 0"	17' 3"	15' 1"	21' 4"	19' 4"	16' 11"

" e " Requires web stiffeners at end supports
Web stiffeners required at all interior supports for 2-span conditions.

Floor Joist Span Tables

See Allowable Floor Joist Span Table Notes on page 29.

15 psf Dead Load and 125 psf Live Load

Complies with 2009 & 2012 International Building Code (IBC)

15 psf Dead Load and 125 psf Live Load													
Section	F_y	L/360 Live Load Deflection						L/480 Live Load Deflection					
		Single Span			Two Equal Spans			Single Span			Two Equal Spans		
		Spacing (in)			Spacing (in)			Spacing (in)			Spacing (in)		
	(ksi)	12	16	24	12	16	24	12	16	24	12	16	24
1200S162-54	50	14' 11" e	12' 11" e	9' 10" e	12' 8" e	10' 2" e	7' 3" e	14' 11" e	12' 11" e	9' 10" e	12' 8" e	10' 2" e	7' 3" e
1200S200-54	50	16' 2" e	14' 0" e	9' 10" e	12' 11" e	10' 4" e	7' 4" e	16' 2" e	14' 0" e	9' 10" e	12' 11" e	10' 4" e	7' 4" e
1200S250-54	50	16' 8" e	14' 5" e	9' 10" e	13' 1" e	10' 5" e	7' 4" e	16' 8" e	14' 5" e	9' 10" e	13' 1" e	10' 5" e	7' 4" e
1200S162-68	50	17' 9" e	15' 4" e	12' 7" e	17' 8"	14' 10"	11' 5"	17' 0"	15' 4" e	12' 7" e	17' 8"	14' 10"	11' 5"
1200S200-68	50	19' 1" e	16' 6" e	13' 6" e	18' 6"	15' 6"	11' 10" e	17' 9" e	16' 1" e	13' 6" e	18' 6"	15' 6"	11' 10" e
1200S250-68	50	19' 9" e	17' 1" e	13' 11" e	18' 7"	15' 7"	11' 11" e	18' 5" e	16' 9" e	13' 11" e	18' 7"	15' 7"	11' 11" e
1200S162-97	50	21' 2"	19' 2"	16' 3"	23' 0"	19' 11"	16' 3"	19' 2"	17' 5"	15' 3"	21' 7"	19' 7"	16' 3"
1200S200-97	50	22' 0"	20' 0"	17' 5" e	24' 7"	21' 3"	17' 5"	20' 0"	18' 2"	15' 10"	22' 5"	20' 5"	17' 5"
1200S250-97	50	22' 10"	20' 9"	17' 11" e	25' 5"	22' 0"	17' 11"	20' 9"	18' 10"	16' 6"	23' 3"	21' 2"	17' 11"
1200S162-118	50	22' 5"	20' 4"	17' 9"	25' 2"	22' 10"	18' 9"	20' 4"	18' 6"	16' 2"	22' 10"	20' 9"	18' 2"
1200S200-118	50	23' 4"	21' 2"	18' 6"	26' 2"	23' 10"	19' 11"	21' 2"	19' 3"	16' 10"	23' 10"	21' 8"	18' 11"
1200S250-118	50	24' 3"	22' 0"	19' 3"	27' 3"	24' 9"	20' 7"	22' 0"	20' 0"	17' 6"	24' 9"	22' 6"	19' 7"
1200S300-118	50	25' 1"	22' 9"	19' 11"	28' 2"	25' 7"	21' 11"	22' 9"	20' 8"	18' 1"	25' 7"	23' 3"	20' 4"
1200S350-118	50	26' 4"	23' 11"	20' 10"	29' 6"	26' 10"	23' 5"	23' 11"	21' 8"	19' 0"	26' 10"	24' 4"	21' 3"
1400S162-54	50	15' 9" e	12' 7" e	8' 5" e	12' 0" e	9' 5" e	6' 6" e	15' 9" e	12' 7" e	8' 5" e	12' 0" e	9' 5" e	6' 6" e
1400S200-54	50	16' 10" e	12' 7" e	8' 5" e	12' 2" e	9' 6" e	6' 6" e	16' 10" e	12' 7" e	8' 5" e	12' 2" e	9' 6" e	6' 6" e
1400S250-54	50	16' 10" e	12' 7" e	8' 5" e	12' 3" e	9' 6" e	6' 6" e	16' 10" e	12' 7" e	8' 5" e	12' 3" e	9' 6" e	6' 6" e
1400S300-54	50	16' 10" e	12' 7" e	8' 5" e	12' 3" e	9' 6" e	6' 6" e	16' 10" e	12' 7" e	8' 5" e	12' 3" e	9' 6" e	6' 6" e
1400S350-54	50	16' 10" e	12' 7" e	8' 5" e	12' 7" e	9' 8" e	6' 7" e	16' 10" e	12' 7" e	8' 5" e	12' 7" e	9' 8" e	6' 7" e
1400S162-68	50	18' 10" e	16' 4" e	13' 4" e	18' 2"	15' 0"	11' 2"	18' 10" e	16' 4" e	13' 4" e	18' 2"	15' 0"	11' 2"
1400S200-68	50	20' 4" e	17' 8" e	14' 5" e	18' 11"	15' 6"	11' 6" e	20' 0" e	17' 8" e	14' 5" e	18' 11"	15' 6"	11' 6" e
1400S250-68	50	21' 2" e	18' 4" e	14' 11" e	19' 0"	15' 7"	11' 6" e	20' 9" e	18' 4" e	14' 11" e	19' 0"	15' 7"	11' 6" e
1400S300-68	50	21' 8" e	18' 9" e	15' 4" e	19' 2"	15' 9"	11' 7" e	21' 4" e	18' 9" e	15' 4" e	19' 2"	15' 9"	11' 7" e
1400S350-68	50	24' 2" e	20' 11" e	16' 11" e	20' 9"	16' 10"	12' 2" e	22' 9" e	20' 8" e	16' 11" e	20' 9"	16' 10"	12' 2" e
1400S162-97	50	24' 0"	21' 5"	17' 5" e	24' 8"	21' 5"	17' 5"	21' 11"	19' 10"	17' 3" e	24' 5"	21' 5"	17' 5"
1400S200-97	50	24' 11"	22' 7"	18' 8" e	26' 5"	22' 11"	18' 8"	22' 9"	20' 8"	18' 0" e	25' 5"	22' 11"	18' 8"
1400S250-97	50	25' 10"	23' 5"	19' 5" e	27' 5"	23' 9"	19' 4"	23' 7"	21' 4"	18' 8" e	26' 4"	23' 9"	19' 4"
1400S300-97	50	26' 8"	24' 3"	19' 10" e	28' 1"	24' 4"	19' 10"	24' 4"	22' 1"	19' 3" e	27' 3"	24' 4"	19' 10"
1400S350-97	50	28' 0"	25' 5" e	21' 11" e	30' 11"	26' 10"	21' 11"	25' 5"	23' 1"	20' 2" e	28' 6"	25' 11"	21' 11"
1400S162-118	50	25' 7"	23' 3"	20' 3"	28' 7"	24' 9"	20' 3"	23' 3"	21' 1"	18' 5"	26' 1"	23' 9"	20' 3"
1400S200-118	50	26' 7"	24' 2"	21' 1"	29' 10"	26' 5"	21' 7"	24' 2"	21' 11"	19' 2"	27' 1"	24' 8"	21' 6"
1400S250-118	50	27' 6"	25' 0"	21' 10"	30' 11"	27' 5"	22' 5"	25' 0"	22' 9"	19' 10"	28' 1"	25' 6"	22' 3"
1400S300-118	50	28' 5"	25' 10"	22' 7"	31' 11"	28' 1"	22' 11"	25' 10"	23' 6"	20' 6"	29' 0"	26' 4"	22' 11"
1400S350-118	50	29' 9"	27' 0"	23' 7"	33' 5"	30' 4"	25' 11"	27' 0"	24' 7"	21' 5"	30' 4"	27' 7"	24' 1"
1600S162-68	50	19' 9" e	17' 1" e	14' 0" e	18' 2" e	14' 8" e	10' 7" e	19' 9" e	17' 1" e	14' 0" e	18' 2" e	14' 8" e	10' 7" e
1600S200-68	50	21' 5" e	18' 7" e	14' 9" e	18' 9" e	15' 1" e	10' 9" e	21' 5" e	18' 7" e	14' 9" e	18' 9" e	15' 1" e	10' 9" e
1600S250-68	50	22' 4" e	19' 4" e	14' 9" e	18' 9" e	15' 1" e	10' 10" e	22' 4" e	19' 4" e	14' 9" e	18' 9" e	15' 1" e	10' 10" e
1600S300-68	50	22' 11" e	19' 10" e	14' 9" e	18' 11" e	15' 2" e	10' 10" e	22' 11" e	19' 10" e	14' 9" e	18' 11" e	15' 2" e	10' 10" e
1600S350-68	50	25' 9" e	22' 1" e	14' 9" e	19' 11" e	15' 9" e	11' 1" e	24' 10" e	22' 1" e	14' 9" e	19' 11" e	15' 9" e	11' 1" e
1600S162-97	50	26' 1"	22' 7"	18' 5" e	26' 1"	22' 7"	18' 5"	24' 5"	22' 1"	18' 5" e	26' 1"	22' 7"	18' 5"
1600S200-97	50	27' 9"	24' 3" e	19' 10" e	28' 0"	24' 3"	19' 7"	25' 4"	22' 11"	19' 10" e	28' 0"	24' 3"	19' 7"
1600S250-97	50	28' 8"	25' 3" e	20' 7" e	29' 2"	25' 3"	20' 1"	26' 2"	23' 9"	20' 7" e	29' 2"	25' 3"	20' 1"
1600S300-97	50	29' 7"	25' 11" e	21' 2" e	29' 11"	25' 11"	20' 7"	27' 0"	24' 6" e	21' 2" e	29' 11"	25' 11"	20' 7"
1600S350-97	50	30' 11"	28' 1" e	23' 5" e	32' 6"	27' 7"	21' 7" e	28' 2"	25' 7" e	22' 4" e	31' 7"	27' 7"	21' 7" e
1600S162-118	50	28' 9"	26' 1"	21' 6"	30' 4"	26' 4"	21' 6"	26' 2"	23' 9"	20' 8"	29' 3"	26' 4"	21' 6"
1600S200-118	50	29' 9"	27' 0"	23' 0"	32' 6"	28' 2"	23' 0"	27' 1"	24' 7"	21' 6"	30' 4"	27' 6"	23' 0"
1600S250-118	50	30' 9"	27' 11"	23' 11" e	33' 10"	29' 3"	23' 11"	28' 0"	25' 5"	22' 2"	31' 5"	28' 6"	23' 11"
1600S300-118	50	31' 9"	28' 10"	24' 7" e	34' 9"	30' 1"	24' 7"	28' 10"	26' 2"	22' 10"	32' 4"	29' 4"	24' 7"
1600S350-118	50	33' 1"	30' 1"	26' 3" e	37' 1"	33' 0"	26' 11"	30' 1"	27' 4"	23' 11" e	33' 9"	30' 8"	26' 9"

" e " Requires web stiffeners at end supports
Web stiffeners required at all interior supports for 2-span conditions.

Floor Joist Span Tables

See Allowable Floor Joist Span Table Notes on page 29.

40 psf Dead Load and 125 psf Live Load

Complies with 2009 & 2012 International Building Code (IBC)

40 psf Dead Load and 125 psf Live Load													
Section	F_y	L/360 Live Load Deflection						L/480 Live Load Deflection					
		Single Span			Two Equal Spans			Single Span			Two Equal Spans		
		Spacing (in)			Spacing (in)			Spacing (in)			Spacing (in)		
	(ksi)	12	16	24	12	16	24	12	16	24	12	16	24
600S162-33	33	6' 2" e	5' 4" e	3' 10" e	5' 1" e	4' 1" e	2' 11" e	6' 2" e	5' 4" e	3' 10" e	5' 1" e	4' 1" e	2' 11" e
600S200-33	33	6' 7" e	5' 9" e	3' 10" e	5' 2" e	4' 2" e	2' 11" e	6' 7" e	5' 9" e	3' 10" e	5' 2" e	4' 2" e	2' 11" e
600S162-43	33	7' 8" e	6' 7" e	5' 5" e	7' 4" e	6' 1" e	4' 8" e	7' 8" e	6' 7" e	5' 5" e	7' 4" e	6' 1" e	4' 8" e
600S200-43	33	7' 11" e	6' 10" e	5' 7" e	7' 5" e	6' 2" e	4' 8" e	7' 11" e	6' 10" e	5' 7" e	7' 5" e	6' 2" e	4' 8" e
600S250-43	33	8' 1" e	7' 0" e	5' 9" e	7' 7" e	6' 3" e	4' 9" e	8' 1" e	7' 0" e	5' 9" e	7' 7" e	6' 3" e	4' 9" e
600S162-54	50	10' 0"	8' 10" e	7' 3" e	10' 2"	8' 7"	6' 7"	9' 1"	8' 3"	7' 3" e	10' 2"	8' 7"	6' 7"
600S200-54	50	10' 6"	9' 1" e	7' 5" e	10' 2"	8' 7"	6' 7"	9' 7"	8' 8" e	7' 5" e	10' 2"	8' 7"	6' 7"
600S250-54	50	10' 9"	9' 4" e	7' 7" e	10' 5"	8' 9"	6' 9"	10' 0"	9' 1" e	7' 7" e	10' 5"	8' 9"	6' 9"
600S162-68	50	10' 9"	9' 9"	8' 6" e	12' 0"	10' 3"	8' 1"	9' 9"	8' 10"	7' 9"	10' 11"	9' 11"	8' 1"
600S200-68	50	11' 3"	10' 3"	8' 11" e	12' 7"	10' 8"	8' 5"	10' 3"	9' 4"	8' 2"	11' 6"	10' 5"	8' 5"
600S250-68	50	11' 10"	10' 9"	8' 11" e	12' 3"	10' 5"	8' 3"	10' 9"	9' 9"	8' 6" e	12' 1"	10' 5"	8' 3"
600S162-97	50	11' 11"	10' 10"	9' 5"	13' 4"	12' 1"	9' 10"	10' 10"	9' 10"	8' 7"	12' 1"	11' 0"	9' 7"
600S200-97	50	12' 6"	11' 4"	9' 11"	14' 1"	12' 9"	10' 5"	11' 4"	10' 4"	9' 0"	12' 9"	11' 7"	10' 2"
600S250-97	50	13' 2"	11' 11"	10' 5"	14' 9"	13' 5"	10' 8"	11' 11"	10' 10"	9' 6"	13' 5"	12' 2"	10' 8"
600S162-118	50	12' 7"	11' 5"	10' 0"	14' 1"	12' 10"	10' 7"	11' 5"	10' 4"	9' 1"	12' 10"	11' 8"	10' 2"
600S200-118	50	13' 3"	12' 0"	10' 6"	14' 10"	13' 6"	11' 1"	12' 0"	10' 11"	9' 7"	13' 6"	12' 3"	10' 9"
600S250-118	50	13' 11"	12' 8"	11' 1"	15' 8"	14' 2"	11' 6"	12' 8"	11' 6"	10' 0"	14' 2"	12' 11"	11' 3"
800S162-33	33	5' 9" e	4' 4" e	2' 10" e	4' 4" e	3' 4" e	2' 3" e	5' 9" e	4' 4" e	2' 10" e	4' 4" e	3' 4" e	2' 3" e
800S200-33	33	5' 9" e	4' 4" e	2' 10" e	4' 5" e	3' 4" e	2' 3" e	5' 9" e	4' 4" e	2' 10" e	4' 5" e	3' 4" e	2' 3" e
800S162-43	33	8' 7" e	7' 5" e	6' 1" e	7' 5" e	6' 1" e	4' 5" e	8' 7" e	7' 5" e	6' 1" e	7' 5" e	6' 1" e	4' 5" e
800S200-43	33	9' 2" e	8' 0" e	6' 4" e	8' 0" e	6' 5" e	4' 8" e	9' 2" e	8' 0" e	6' 4" e	8' 0" e	6' 5" e	4' 8" e
800S250-43	33	9' 5" e	8' 2" e	6' 4" e	8' 0" e	6' 6" e	4' 8" e	9' 5" e	8' 2" e	6' 4" e	8' 0" e	6' 6" e	4' 8" e
800S162-54	50	11' 6" e	10' 0" e	8' 2" e	11' 2"	9' 4"	7' 3" e	11' 5" e	10' 0" e	8' 2" e	11' 2"	9' 4"	7' 3" e
800S200-54	50	12' 3" e	10' 8" e	8' 8" e	12' 1"	10' 1"	7' 8" e	12' 0" e	10' 8" e	8' 8" e	12' 1"	10' 1"	7' 8" e
800S250-54	50	12' 7" e	10' 11" e	8' 11" e	12' 2"	10' 2"	7' 9" e	12' 6" e	10' 11" e	8' 11" e	12' 2"	10' 2"	7' 9" e
800S162-68	50	13' 6"	11' 8"	9' 7" e	13' 6"	11' 6"	9' 2"	12' 4"	11' 2"	9' 7" e	13' 6"	11' 6"	9' 2"
800S200-68	50	14' 2"	12' 10" e	10' 6" e	14' 10"	12' 10"	10' 2"	12' 11"	11' 8"	10' 3" e	14' 5"	12' 10"	10' 2"
800S250-68	50	14' 9"	12' 9" e	10' 5" e	14' 9"	12' 8"	9' 11"	13' 5"	12' 3" e	10' 5" e	14' 9"	12' 8"	9' 11"
800S162-97	50	15' 0"	13' 8"	11' 11"	16' 9"	14' 5"	11' 7"	13' 8"	12' 5"	10' 10"	15' 4"	13' 11"	11' 7"
800S200-97	50	15' 9"	14' 4"	12' 6"	17' 8"	16' 1"	13' 2"	14' 4"	13' 0"	11' 4"	16' 1"	14' 7"	12' 9"
800S250-97	50	16' 6"	15' 0"	13' 1"	18' 6"	16' 10"	13' 6"	15' 0"	13' 7"	11' 11"	16' 10"	15' 3"	13' 4"
800S162-118	50	15' 11"	14' 5"	12' 7"	17' 10"	16' 3"	13' 11"	14' 5"	13' 2"	11' 6"	16' 3"	14' 9"	12' 11"
800S200-118	50	16' 8"	15' 2"	13' 3"	18' 9"	17' 0"	14' 8"	15' 2"	13' 9"	12' 0"	17' 0"	15' 6"	13' 6"
800S250-118	50	17' 6"	15' 10"	13' 10"	19' 7"	17' 10"	15' 2"	15' 10"	14' 5"	12' 7"	17' 10"	16' 2"	14' 2"
1000S162-43	33	9' 6" e	7' 7" e	5' 1" e	7' 1" e	5' 7" e	3' 11" e	9' 6" e	7' 7" e	5' 1" e	7' 1" e	5' 7" e	3' 11" e
1000S200-43	33	10' 2" e	7' 7" e	5' 1" e	7' 3" e	5' 8" e	3' 11" e	10' 2" e	7' 7" e	5' 1" e	7' 3" e	5' 8" e	3' 11" e
1000S250-43	33	10' 2" e	7' 7" e	5' 1" e	7' 4" e	5' 9" e	3' 11" e	10' 2" e	7' 7" e	5' 1" e	7' 4" e	5' 9" e	3' 11" e
1000S162-54	50	12' 9" e	11' 1" e	9' 0" e	11' 6"	9' 5"	6' 11" e	12' 9" e	11' 1" e	9' 0" e	11' 6"	9' 5"	6' 11" e
1000S200-54	50	13' 9" e	11' 11" e	9' 8" e	11' 10"	9' 8"	7' 1" e	13' 9" e	11' 11" e	9' 8" e	11' 10"	9' 8"	7' 1" e
1000S250-54	50	14' 1" e	12' 2" e	10' 0" e	12' 2"	9' 11"	7' 2" e	14' 1" e	12' 2" e	10' 0" e	12' 2"	9' 11"	7' 2" e
1000S162-68	50	15' 1"	13' 1" e	10' 8" e	15' 1"	12' 11"	10' 1"	14' 8"	13' 1" e	10' 8" e	15' 1"	12' 11"	10' 1"
1000S200-68	50	16' 2" e	14' 0" e	11' 5" e	16' 0"	13' 6"	10' 7" e	15' 4"	13' 11" e	11' 5" e	16' 0"	13' 6"	10' 7" e
1000S250-68	50	16' 7" e	14' 4" e	11' 9" e	16' 7"	14' 3"	11' 1" e	16' 1" e	14' 4" e	11' 9" e	16' 7"	14' 3"	11' 1" e
1000S162-97	50	18' 1"	16' 5"	13' 8"	19' 4"	16' 9"	13' 6"	16' 5"	14' 11"	13' 1"	18' 6"	16' 9"	13' 6"
1000S200-97	50	18' 11"	17' 2"	14' 7"	20' 7"	17' 10"	14' 4"	17' 2"	15' 7"	13' 8"	19' 3"	17' 6"	14' 4"
1000S250-97	50	19' 8"	17' 11"	15' 7" e	22' 0"	19' 1"	15' 7"	17' 11"	16' 3"	14' 2"	20' 1"	18' 3"	15' 7"
1000S162-118	50	19' 2"	17' 5"	15' 3"	21' 6"	18' 9"	15' 2"	17' 5"	15' 10"	13' 10"	19' 7"	17' 9"	15' 2"
1000S200-118	50	20' 1"	18' 3"	15' 11"	22' 6"	20' 0"	16' 2"	18' 3"	16' 7"	14' 5"	20' 5"	18' 7"	16' 2"
1000S250-118	50	20' 11"	19' 0"	16' 7"	23' 5"	21' 4"	18' 0"	19' 0"	17' 3"	15' 1"	21' 4"	19' 4"	16' 11"

" e " Requires web stiffeners at end supports
Web stiffeners required at all interior supports for 2-span conditions.

Floor Joist Span Tables

See Allowable Floor Joist Span Table Notes on page 29.

40 psf Dead Load and 125 psf Live Load

Complies with 2009 & 2012 International Building Code (IBC)

40 psf Dead Load and 125 psf Live Load													
Section	F_y	L/360 Live Load Deflection						L/480 Live Load Deflection					
		Single Span			Two Equal Spans			Single Span			Two Equal Spans		
		Spacing (in)			Spacing (in)			Spacing (in)			Spacing (in)		
	(ksi)	12	16	24	12	16	24	12	16	24	12	16	24
1200S162-54	50	13' 9" e	11' 11" e	8' 4" e	11' 3" e	8' 11" e	6' 3" e	13' 9" e	11' 11" e	8' 4" e	11' 3" e	8' 11" e	6' 3" e
1200S200-54	50	14' 10" e	12' 6" e	8' 4" e	11' 5" e	9' 0" e	6' 4" e	14' 10" e	12' 6" e	8' 4" e	11' 5" e	9' 0" e	6' 4" e
1200S250-54	50	15' 4" e	12' 6" e	8' 4" e	11' 6" e	9' 1" e	6' 4" e	15' 4" e	12' 6" e	8' 4" e	11' 6" e	9' 1" e	6' 4" e
1200S162-68	50	16' 4" e	14' 2" e	11' 7" e	16' 0"	13' 5"	10' 2" e	16' 4" e	14' 2" e	11' 7" e	16' 0"	13' 5"	10' 2" e
1200S200-68	50	17' 7" e	15' 3" e	12' 5" e	16' 9"	13' 11"	10' 6" e	17' 7" e	15' 3" e	12' 5" e	16' 9"	13' 11"	10' 6" e
1200S250-68	50	18' 2" e	15' 9" e	12' 10" e	16' 10"	14' 0"	10' 7" e	18' 2" e	15' 9" e	12' 10" e	16' 10"	14' 0"	10' 7" e
1200S162-97	50	21' 1"	18' 4"	15' 0" e	21' 2"	18' 4"	15' 0"	19' 2"	17' 5"	15' 0" e	21' 2"	18' 4"	15' 0"
1200S200-97	50	22' 0"	19' 7"	16' 0" e	22' 8"	19' 7"	15' 11"	20' 0"	18' 2"	15' 10" e	22' 5"	19' 7"	15' 11"
1200S250-97	50	22' 10"	20' 3"	16' 6" e	23' 5"	20' 3"	16' 5"	20' 9"	18' 10"	16' 6" e	23' 3"	20' 3"	16' 5"
1200S162-118	50	22' 5"	20' 4"	17' 3"	24' 5"	21' 1"	17' 2"	20' 4"	18' 6"	16' 2"	22' 10"	20' 9"	17' 2"
1200S200-118	50	23' 4"	21' 2"	18' 4"	26' 0"	22' 6"	18' 3"	21' 2"	19' 3"	16' 10"	23' 10"	21' 8"	18' 3"
1200S250-118	50	24' 3"	22' 0"	19' 0"	26' 10"	23' 3"	19' 0"	22' 0"	20' 0"	17' 6"	24' 9"	22' 6"	19' 0"
1200S300-118	50	25' 1"	22' 9"	19' 11"	28' 2"	24' 9"	20' 2"	22' 9"	20' 8"	18' 1"	25' 7"	23' 3"	20' 2"
1200S350-118	50	26' 4"	23' 11"	20' 10" e	29' 6"	26' 10"	22' 0"	23' 11"	21' 8"	19' 0"	26' 10"	24' 4"	21' 3"
1400S162-54	50	14' 3" e	10' 8" e	7' 2" e	10' 5" e	8' 1" e	5' 7" e	14' 3" e	10' 8" e	7' 2" e	10' 5" e	8' 1" e	5' 7" e
1400S200-54	50	14' 3" e	10' 8" e	7' 2" e	10' 7" e	8' 2" e	5' 7" e	14' 3" e	10' 8" e	7' 2" e	10' 7" e	8' 2" e	5' 7" e
1400S250-54	50	14' 3" e	10' 8" e	7' 2" e	10' 7" e	8' 2" e	5' 7" e	14' 3" e	10' 8" e	7' 2" e	10' 7" e	8' 2" e	5' 7" e
1400S300-54	50	14' 3" e	10' 8" e	7' 2" e	10' 8" e	8' 2" e	5' 7" e	14' 3" e	10' 8" e	7' 2" e	10' 8" e	8' 2" e	5' 7" e
1400S350-54	50	14' 3" e	10' 8" e	7' 2" e	10' 11" e	8' 4" e	5' 8" e	14' 3" e	10' 8" e	7' 2" e	10' 11" e	8' 4" e	5' 8" e
1400S162-68	50	17' 4" e	15' 0" e	12' 3" e	16' 4"	13' 4"	9' 10" e	17' 4" e	15' 0" e	12' 3" e	16' 4"	13' 4"	9' 10" e
1400S200-68	50	18' 9" e	16' 3" e	13' 3" e	16' 11"	13' 9"	10' 1" e	18' 9" e	16' 3" e	13' 3" e	16' 11"	13' 9"	10' 1" e
1400S250-68	50	19' 6" e	16' 10" e	13' 9" e	17' 0"	13' 10"	10' 1" e	19' 6" e	16' 10" e	13' 9" e	17' 0"	13' 10"	10' 1" e
1400S300-68	50	19' 11" e	17' 3" e	14' 1" e	17' 2"	13' 11"	10' 2" e	19' 11" e	17' 3" e	14' 1" e	17' 2"	13' 11"	10' 2" e
1400S350-68	50	22' 3" e	19' 3" e	14' 4" e	18' 5"	14' 9" e	10' 7" e	22' 3" e	19' 3" e	14' 4" e	18' 5"	14' 9" e	10' 7" e
1400S162-97	50	22' 9"	19' 8"	16' 1" e	22' 9"	19' 8"	16' 1"	21' 10"	19' 8"	16' 1" e	22' 9"	19' 8"	16' 1"
1400S200-97	50	24' 4"	21' 1" e	17' 3" e	24' 4"	21' 1"	17' 1"	22' 8"	20' 7"	17' 3" e	24' 4"	21' 1"	17' 1"
1400S250-97	50	25' 3"	21' 11" e	17' 10" e	25' 3"	21' 11"	17' 7"	23' 6"	21' 4" e	17' 10" e	25' 3"	21' 11"	17' 7"
1400S300-97	50	25' 10"	22' 5" e	18' 3" e	25' 10"	22' 5"	18' 0"	24' 3"	22' 0" e	18' 3" e	25' 10"	22' 5"	18' 0"
1400S350-97	50	28' 0" e	24' 8" e	20' 2" e	28' 6"	24' 8"	20' 0" e	25' 5"	23' 1" e	20' 2" e	28' 6"	24' 8"	20' 0" e
1400S162-118	50	25' 7"	22' 10"	18' 7"	26' 4"	22' 10"	18' 7"	23' 3"	21' 1"	18' 5"	26' 1"	22' 10"	18' 7"
1400S200-118	50	26' 7"	24' 2"	19' 11"	28' 1"	24' 4"	19' 11"	24' 2"	21' 11"	19' 2"	27' 1"	24' 4"	19' 11"
1400S250-118	50	27' 6"	25' 0"	20' 7" e	29' 2"	25' 3"	20' 7"	25' 0"	22' 9"	19' 10"	28' 1"	25' 3"	20' 7"
1400S300-118	50	28' 5"	25' 10"	21' 1" e	29' 10"	25' 10"	21' 1"	25' 10"	23' 6"	20' 6" e	29' 0"	25' 10"	21' 1"
1400S350-118	50	29' 9"	27' 0"	23' 7" e	33' 5"	29' 3"	23' 11"	27' 0"	24' 7"	21' 5" e	30' 4"	27' 7"	23' 11"
1600S162-68	50	18' 2" e	15' 9" e	12' 6" e	16' 1" e	12' 11" e	9' 3" e	18' 2" e	15' 9" e	12' 6" e	16' 1" e	12' 11" e	9' 3" e
1600S200-68	50	19' 9" e	17' 1" e	12' 6" e	16' 7" e	13' 2" e	9' 4" e	19' 9" e	17' 1" e	12' 6" e	16' 7" e	13' 2" e	9' 4" e
1600S250-68	50	20' 7" e	17' 10" e	12' 6" e	16' 7" e	13' 3" e	9' 4" e	20' 7" e	17' 10" e	12' 6" e	16' 7" e	13' 3" e	9' 4" e
1600S300-68	50	21' 2" e	18' 4" e	12' 6" e	16' 9" e	13' 4" e	9' 5" e	21' 2" e	18' 4" e	12' 6" e	16' 9" e	13' 4" e	9' 5" e
1600S350-68	50	23' 8" e	18' 9" e	12' 6" e	17' 6" e	13' 9" e	9' 7" e	23' 8" e	18' 9" e	12' 6" e	17' 6" e	13' 9" e	9' 7" e
1600S162-97	50	24' 0"	20' 10" e	17' 0" e	24' 0"	20' 10"	16' 10"	24' 0"	20' 10" e	17' 0" e	24' 0"	20' 10"	16' 10"
1600S200-97	50	25' 10"	22' 4" e	18' 3" e	25' 10"	22' 4"	17' 8"	25' 2"	22' 4" e	18' 3" e	25' 10"	22' 4"	17' 8"
1600S250-97	50	26' 10"	23' 3" e	19' 0" e	26' 10"	23' 2"	18' 2"	26' 1"	23' 3" e	19' 0" e	26' 10"	23' 2"	18' 2"
1600S300-97	50	27' 7" e	23' 11" e	19' 6" e	27' 7"	23' 9"	18' 7" e	26' 11"	23' 11" e	19' 6" e	27' 7"	23' 9"	18' 7" e
1600S350-97	50	30' 6" e	26' 5" e	21' 7" e	29' 7"	25' 0"	19' 6" e	28' 2" e	25' 6" e	21' 7" e	29' 7"	25' 0"	19' 6" e
1600S162-118	50	28' 0"	24' 3"	19' 9" e	28' 0"	24' 3"	19' 9"	26' 1"	23' 8"	19' 9" e	28' 0"	24' 3"	19' 9"
1600S200-118	50	29' 8"	25' 11"	21' 2" e	29' 11"	25' 11"	21' 2"	27' 1"	24' 7"	21' 2" e	29' 11"	25' 11"	21' 2"
1600S250-118	50	30' 8"	27' 0"	22' 0" e	31' 2"	27' 0"	22' 0"	28' 0"	25' 5"	22' 0" e	31' 2"	27' 0"	22' 0"
1600S300-118	50	31' 8"	27' 8"	22' 7" e	32' 0"	27' 8"	22' 7"	28' 10"	26' 2"	22' 7" e	32' 0"	27' 8"	22' 7"
1600S350-118	50	33' 1"	30' 0" e	24' 10" e	35' 1"	30' 5"	24' 8"	30' 1"	27' 4"	23' 10" e	33' 9"	30' 5"	24' 8"

" e " Requires web stiffeners at end supports
Web stiffeners required at all interior supports for 2-span conditions.

Header Load Table Notes

1. Deflection limit is L/360.
2. Allowable loads have not been modified for wind or earthquake loading.
3. Headers are made from two "boxed" or back to back members.
4. Allowable moment, shear and web crippling are based on twice the capacity of a single member. The moment of inertia is based on twice the value of the single member.
5. Bearing length for web crippling = 1" minimum.
6. Values are for unpunched members.
7. Members are assumed adequately braced for bending.
8. Allowable loads are for simply supported headers with uniform bending loads only.

Header Allowable Uniform Loads (lb/ft)								
Section	Yield Strength (ksi)	Span						
		3 (ft)	4 (ft)	5 (ft)	6 (ft)	8 (ft)	10 (ft)	12 (ft)
550S162-33	33	931.4 e	698.5 e	460.1 e	319.5 e	179.7 e	115.0 e	73.8 e
550S162-43	33	1,946.5 e	1,094.9 e	700.8 e	486.6 e	273.7 e	164.6 e	95.3 e
550S162-54	50	3,484.7 e	1,960.1 e	1,254.5 e	871.2 e	396.8 e	203.2	117.6
550S162-68	50	4,782.6 e	2,690.2 e	1,721.7 e	1,157.8 e	488.5 e	250.1	144.7
600S137-33	33	850.8 e	638.1 e	436.5 e	303.1 e	170.5 e	109.1 e	75.8 e
600S162-33	33	850.8 e	638.1 e	504.9 e	350.6 e	197.2 e	126.2 e	87.6 e
600S200-33	33	850.8 e	638.1 e	510.5 e	398.7 e	224.2 e	143.5 e	99.7 e
600S137-43	33	1,751.1 e	985.0 e	630.4 e	437.8 e	246.3 e	157.6 e	103.2 e
600S162-43	33	1,887.6 e	1,205.1 e	771.3 e	535.6 e	301.3 e	192.8 e	117.1 e
600S200-43	33	1,887.6 e	1,282.4 e	820.7 e	569.9 e	320.6 e	205.2 e	135.7 e
600S250-43	33	1,887.6 e	1,350.7 e	864.4 e	600.3 e	337.7 e	216.1 e	150.1 e
600S137-54	50	3,146.8 e	1,770.1 e	1,132.9 e	786.7 e	429.8 e	220.1	127.3
600S162-54	50	3,763.8 e	2,158.3 e	1,381.3 e	959.3 e	488.3 e	250.0 e	144.7
600S200-54	50	3,763.8 e	2,281.9 e	1,460.4 e	1,014.2 e	566.7 e	290.1 e	167.9
600S250-54	50	3,763.8 e	2,392.7 e	1,531.4 e	1,063.4 e	598.2 e	329.1 e	190.5
600S137-68	50	4,280.5 e	2,407.8 e	1,541.0 e	1,070.1 e	528.3 e	270.5	156.5
600S162-68	50	5,288.3 e	2,974.7 e	1,903.8 e	1,322.1 e	601.7 e	308.1	178.3
600S200-68	50	5,880.1 e	3,307.5 e	2,116.8 e	1,470.0 e	700.0 e	358.4	207.4
600S250-68	50	5,788.2 e	3,255.8 e	2,083.7 e	1,447.0 e	806.3 e	412.8 e	238.9
600S137-97	50	7,526.5 e	4,233.7 e	2,709.5 e	1,694.8 e	715.0	366.1	211.8
600S162-97	50	8,403.7 e	4,727.1 e	3,025.3 e	1,941.3 e	819.0	419.3	242.7
600S200-97	50	9,432.6 e	5,305.9 e	3,395.7 e	2,270.9 e	958.0 e	490.5	283.9
600S250-97	50	9,898.1 e	5,567.7 e	3,563.3 e	2,474.5 e	1,109.0 e	567.8	328.6
600S137-118	50	9,138.7 e	5,140.5 e	3,289.9 e	1,987.9 e	838.7	429.4	248.5
600S162-118	50	10,212.8 e	5,744.7 e	3,676.6 e	2,287.3 e	965.0	494.1	285.9
600S200-118	50	11,620.3 e	6,536.4 e	4,183.3 e	2,687.4 e	1,133.7	580.5	335.9
600S250-118	50	12,729.2 e	7,160.2 e	4,582.5 e	3,121.2 e	1,316.7 e	674.2	390.1
800S137-33	33	632.0 e	474.0 e	379.2 e	316.0 e	223.2 e	142.8 e	99.2 e
800S162-33	33	632.0 e	474.0 e	379.2 e	316.0 e	237.0 e	168.1 e	116.7 e
800S200-33	33	632.0 e	474.0 e	379.2 e	316.0 e	237.0 e	189.6 e	134.5 e
800S137-43	33	1,401.5 e	1,051.2 e	840.9 e	584.3 e	328.7 e	210.3 e	146.1 e
800S162-43	33	1,401.5 e	1,051.2 e	840.9 e	678.8 e	381.8 e	244.4 e	169.7 e
800S200-43	33	1,401.5 e	1,051.2 e	840.9 e	700.8 e	437.2 e	279.8 e	194.3 e
800S250-43	33	1,401.5 e	1,051.2 e	840.9 e	700.8 e	459.5 e	294.1 e	204.2 e
800S137-54	50	2,788.4 e	2,091.3 e	1,518.3 e	1,054.4 e	593.1 e	379.6 e	251.6 e
800S162-54	50	2,788.4 e	2,091.3 e	1,673.0 e	1,215.2 e	683.6 e	437.5 e	283.3 e
800S200-54	50	2,788.4 e	2,091.3 e	1,673.0 e	1,384.1 e	778.6 e	498.3 e	332.5 e
800S250-54	50	2,788.4 e	2,091.3 e	1,673.0 e	1,394.2 e	815.2 e	521.7 e	362.3 e
800S137-68	50	5,627.6 e	3,297.6 e	2,110.4 e	1,465.6 e	824.4 e	527.6 e	317.9 e
800S162-68	50	5,627.6 e	3,759.1 e	2,405.8 e	1,670.7 e	939.8 e	601.4 e	357.6 e
800S200-68	50	5,627.6 e	4,220.7 e	2,917.3 e	2,025.9 e	1,139.6 e	711.5 e	411.8 e
800S250-68	50	5,627.6 e	4,220.7 e	2,866.9 e	1,990.9 e	1,119.9 e	716.7 e	467.4 e
800S137-97	50	9,468.1 e	5,325.8 e	3,408.5 e	2,367.0 e	1,331.5 e	751.5 e	434.9
800S162-97	50	10,657.1 e	5,994.6 e	3,836.6 e	2,664.3 e	1,498.7 e	849.0 e	491.3
800S200-97	50	13,297.5 e	7,479.8 e	4,787.1 e	3,324.4 e	1,870.0 e	979.3 e	566.7
800S250-97	50	13,839.9 e	7,785.0 e	4,982.4 e	3,460.0 e	1,946.2 e	1,117.9 e	646.9 e
800S137-118	50	14,157.3 e	7,963.5 e	5,096.6 e	3,539.3 e	1,732.3 e	886.9	513.3
800S162-118	50	15,589.2 e	8,768.9 e	5,612.1 e	3,897.3 e	1,964.0 e	1,005.5 e	581.9
800S200-118	50	17,414.8 e	9,795.8 e	6,269.3 e	4,353.7 e	2,273.2 e	1,163.9 e	673.5
800S250-118	50	18,210.1 e	10,243.2 e	6,555.6 e	4,552.5 e	2,560.8 e	1,332.2 e	771.0
1000S137-43	33	1,114.6 e	835.9 e	668.7 e	557.3 e	397.8 e	254.6 e	176.8 e
1000S162-43	33	1,114.6 e	835.9 e	668.7 e	557.3 e	418.0 e	299.9 e	208.2 e
1000S200-43	33	1,114.6 e	835.9 e	668.7 e	557.3 e	418.0 e	334.4 e	242.1 e
1000S250-43	33	1114.6 e	835.9 e	668.7 e	557.3 e	418.0 e	334.4 e	256.2 e
1000S137-54	50	2,214.5 e	1,660.8 e	1,328.7 e	1,107.2 e	721.1 e	461.5 e	320.5 e
1000S162-54	50	2,214.5 e	1,660.8 e	1,328.7 e	1,107.2 e	830.4 e	538.3 e	373.8 e
1000S200-54	50	2,214.5 e	1,660.8 e	1,328.7 e	1,107.2 e	830.4 e	621.6 e	431.6 e
1000S250-54	50	2,214.5 e	1,660.8 e	1,328.7 e	1,107.2 e	830.4 e	655.5 e	455.2 e
1000S137-68	50	4,460.5 e	3,345.4 e	2,611.5 e	1,813.5 e	1,020.1 e	652.9 e	453.4 e
1000S162-68	50	4,460.5 e	3,345.4 e	2,676.3 e	2,087.2 e	1,174.0 e	751.4 e	521.8 e
1000S200-68	50	4,460.5 e	3,345.4 e	2,676.3 e	2,230.3 e	1,343.8 e	860.0 e	597.2 e
1000S250-68	50	4,460.5 e	3,345.4 e	2,676.3 e	2,230.3 e	1,419.4 e	908.4 e	630.8 e

" e " Requires web stiffeners at end supports

Header Load Tables

See Header Load Table Notes on page 41.

Allowable Uniform Loads

Complies with 2009 & 2012 International Building Code (IBC)

Header Allowable Uniform Loads (lb/ft)								
Section	Yield Strength (ksi)	Span						
		3 (ft)	4 (ft)	5 (ft)	6 (ft)	8 (ft)	10 (ft)	12 (ft)
1000S137-97	50	12,117.7 e	6,816.2 e	4,362.4 e	3,029.4 e	1,704.1 e	1,090.6 e	757.4 e
1000S162-97	50	13,151.6 e	7,712.9 e	4,936.2 e	3,427.9 e	1,928.2 e	1,234.1 e	857.0 e
1000S200-97	50	13,151.6 e	8,727.6 e	5,585.7 e	3,878.9 e	2,181.9 e	1,396.4 e	969.7 e
1000S250-97	50	13,151.6 e	9,863.7 e	6,407.1 e	4,449.4 e	2,502.8 e	1,601.8 e	1,104.1 e
1000S137-118	50	15,854.9 e	8,918.4 e	5,707.8 e	3,963.7 e	2,229.6 e	1,426.9 e	910.9 e
1000S162-118	50	17,827.7 e	10,028.1 e	6,418.0 e	4,456.9 e	2,507.0 e	1,604.5 e	1,020.2 e
1000S200-118	50	20,110.4 e	11,312.1 e	7,239.8 e	5,027.6 e	2,828.0 e	1,809.9 e	1,166.0 e
1000S250-118	50	21,646.1 e	13,316.3 e	8,522.4 e	5,918.4 e	3,329.1 e	2,130.6 e	1,319.2 e
1200S137-54	50	1,836.5 e	1,377.4 e	1,101.9 e	918.2 e	688.7 e	529.9 e	368.0 e
1200S162-54	50	1,836.5 e	1,377.4 e	1,101.9 e	918.2 e	688.7 e	550.9 e	432.9 e
1200S200-54	50	1,836.5 e	1,377.4 e	1,101.9 e	918.2 e	688.7 e	550.9 e	459.1 e
1200S250-54	50	1,836.5 e	1,377.4 e	1,101.9 e	918.2 e	688.7 e	550.9 e	459.1 e
1200S137-68	50	3,694.3 e	2,770.7 e	2,216.6 e	1,847.2 e	1,187.3 e	759.9 e	527.7 e
1200S162-68	50	3,694.3 e	2,770.7 e	2,216.6 e	1,847.2 e	1,377.9 e	881.8 e	612.4 e
1200S200-68	50	3,694.3 e	2,770.7 e	2,216.6 e	1,847.2 e	1,385.4 e	1,020.7 e	708.8 e
1200S250-68	50	3,694.3 e	2,770.7 e	2,216.6 e	1,847.2 e	1,385.4 e	1,087.9 e	755.5 e
1200S137-97	50	10,862.7 e	8,144.0 e	5,212.1 e	3,619.5 e	2,036.0 e	1,303.0 e	904.9 e
1200S162-97	50	10,862.7 e	8,147.0 e	5,936.1 e	4,122.3 e	2,318.8 e	1,484.0 e	1,030.6 e
1200S200-97	50	10,862.7 e	8,147.0 e	6,517.6 e	4,698.7 e	2,643.0 e	1,691.5 e	1,174.7 e
1200S250-97	50	10,862.7 e	8,147.0 e	6,517.6 e	5,013.8 e	2,820.3 e	1,805.0 e	1,253.5 e
1200S137-118	50	19,323.9 e	10,869.7 e	6,956.6 e	4,831.0 e	2,717.4 e	1,739.1 e	1,207.7 e
1200S162-118	50	19,980.7 e	12,269.5 e	7,852.5 e	5,453.1 e	3,067.4 e	1,963.1 e	1,363.3 e
1200S200-118	50	19,980.7 e	13,900.1e	8,896.1 e	6,177.8 e	3,475.0 e	2,224.0 e	1,544.5 e
1200S250-118	50	19,980.7 e	14,880.8 e	9,523.7 e	6,613.7 e	3,720.2 e	2,380.9 e	1,653.4 e
1200S300-118	50	19,980.7 e	14,985.5 e	10,756.0 e	7,469.4 e	4,201.6 e	2,689.0 e	1,867.4 e
1200S350-118	50	19,980.7 e	14,985.5 e	11,988.4 e	8,850.4 e	4,978.3 e	3,186.1 e	2,212.6 e
1400S162-54	50	1,568.7 e	1,176.5 e	941.2 e	784.4 e	588.3 e	470.6 e	392.2 e
1400S200-54	50	1,568.7 e	1,176.5 e	941.2 e	784.4 e	588.3 e	470.6 e	392.2 e
1400S250-54	50	1,568.7 e	1,176.5 e	941.2 e	784.4 e	588.3 e	470.6 e	392.2 e
1400S300-54	50	1,568.7 e	1,176.5 e	941.2 e	784.4 e	588.3 e	470.6 e	392.2 e
1400S350-54	50	1,568.7 e	1,176.5 e	941.2 e	784.4 e	588.3 e	470.6 e	392.2 e
1400S162-68	50	3,152.8 e	2,364.6 e	1,891.7 e	1,576.4 e	1,182.3 e	945.8 e	690.3 e
1400S200-68	50	3,152.8 e	2,364.6 e	1,891.7 e	1,576.4 e	1,182.3 e	945.8 e	788.2 e
1400S250-68	50	3,152.8 e	2,364.6 e	1,891.7 e	1,576.4 e	1,182.3 e	945.8 e	788.2 e
1400S300-68	50	3,152.8 e	2,364.6 e	1,891.7 e	1,576.4 e	1,182.3 e	945.8 e	788.2 e
1400S350-68	50	3,152.8 e	2,364.6 e	1,891.7 e	1,576.4 e	1,182.3 e	945.8 e	788.2 e
1400S162-97	50	9,252.4 e	6,939.3 e	5,551.4 e	4,626.2 e	2,665.9 e	1,706.2 e	1,184.8 e
1400S200-97	50	9,252.4 e	6,939.3 e	5,551.4 e	4,626.2 e	3,062.0 e	1,959.7 e	1,360.9 e
1400S250-97	50	9,252.4 e	6,939.3 e	5,551.4 e	4,626.2 e	3,290.4 e	2,105.8 e	1,462.4 e
1400S300-97	50	9,252.4 e	6,939.3 e	5,551.4 e	4,626.2 e	3,446.8 e	2,206.0 e	1,531.9 e
1400S350-97	50	9,252.4 e	6,939.3 e	5,551.4 e	4,626.2 e	3,469.6 e	2,683.4 e	1,863.5 e
1400S162-118	50	16,993.8 e	12,745.4 e	9,153.4 e	6,356.5 e	3,575.5 e	2,288.3 e	1,589.1 e
1400S200-118	50	16,993.8 e	12,745.4 e	10,196.3 e	7,245.3 e	4,075.5 e	2,608.3 e	1,811.3 e
1400S250-118	50	16,993.8 e	12,745.4 e	10,196.3 e	7,793.3 e	4,383.7 e	2,805.6 e	1,948.3 e
1400S300-118	50	16,993.8 e	12,745.4 e	10,196.3 e	8,178.0 e	4,600.1 e	2,944.1 e	2,044.5 e
1400S350-118	50	16,993.8 e	12,745.4 e	10,196.3 e	8,496.9 e	5,892.6 e	3,771.3 e	2,618.9 e
1600S162-68	50	2,749.7 e	2,062.3 e	1,649.8 e	1,374.8 e	1,031.1 e	824.9 e	687.4 e
1600S200-68	50	2,749.7 e	2,062.3 e	1,649.8 e	1,374.8 e	1,031.1 e	824.9 e	687.4 e
1600S250-68	50	2,749.7 e	2,062.3 e	1,649.8 e	1,374.8 e	1,031.1 e	824.9 e	687.4 e
1600S300-68	50	2,749.7 e	2,062.3 e	1,649.8 e	1,374.8 e	1,031.1 e	824.9 e	687.4 e
1600S350-68	50	2,749.7 e	2,062.3 e	1,649.8 e	1,374.8 e	1,031.1 e	824.9 e	687.4 e
1600S162-97	50	8,057.9 e	6,043.4 e	4,834.7 e	4,028.9 e	2,975.1 e	1,904.1 e	1,322.3 e
1600S200-97	50	8,057.9 e	6,043.4 e	4,834.7 e	4,028.9 e	3,021.7 e	2,199.8 e	1,527.7 e
1600S250-97	50	8,057.9 e	6,043.4 e	4,834.7 e	4,028.9 e	3,021.7 e	2,381.4 e	1,653.7 e
1600S300-97	50	8,057.9 e	6,043.4 e	4,834.7 e	4,028.9 e	3,021.7 e	2,417.4 e	1,743.7 e
1600S350-97	50	8,057.9 e	6,043.4 e	4,834.7 e	4,028.9 e	3,021.7 e	2,417.4 e	2,014.5 e
1600S162-118	50	14,783.8 e	11,087.9 e	8,870.3 e	7,175.0 e	4,035.9 e	2,583.0 e	1,793.8 e
1600S200-118	50	14,783.8 e	11,087.9 e	8,870.3 e	7,391.9 e	4,622.1 e	2,958.1 e	2,054.3 e
1600S250-118	50	14,783.8 e	11,087.9 e	8,870.3 e	7,391.9 e	5,001.5 e	3,201.0 e	2,222.9 e
1600S300-118	50	14,783.8 e	11,087.9 e	8,870.3 e	7,391.9 e	5,275.8 e	3,376.5 e	2,344.8 e
1600S350-118	50	14,783.8 e	11,087.9 e	8,870.3 e	7,391.9 e	5,543.9 e	4,061.0 e	2,820.1 e

" e " Requires web stiffeners at end supports

Boxed Header

Back-to-Back Header

Box Header consists of two stud sections orientated horizontally and capped at top and bottom with tracks connected through track flanges with required fasteners at designed spacing.

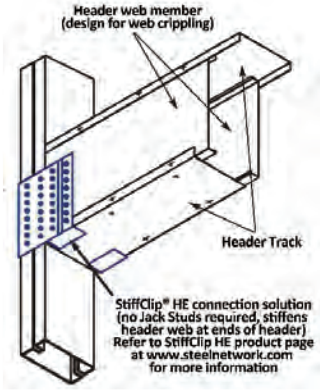

Header Allowable Uniform Loads (lb/ft)								
Section	Yield Strength (ksi)	Span						
		3 (ft)	4 (ft)	5 (ft)	6 (ft)	8 (ft)	10 (ft)	12 (ft)
1200S250-118	33	17,585.4 e	11,177.4 e	7,153.5 e	4,967.7 e	2,794.4 e	1,788.4 e	1,241.9 e
1200S250-118	50	19,980.7 e	14,985.5 e	10,445.0 e	7,253.4 e	4,080.1 e	2,611.2 e	1,813.4 e
1200S300-118	33	17,585.4 e	13,189.0 e	8,840.5 e	6,139.3 e	3,453.3 e	2,210.1 e	1,534.8 e
1200S300-118	50	19,980.7 e	14,985.5 e	11,988.4 e	9,024.6 e	5,076.4 e	3,248.9 e	2,256.2 e
1200S350-118	33	17,585.4 e	13,189.0 e	10,279.4 e	7,138.5 e	4,015.4 e	2,569.9 e	1,784.6 e
1200S350-118	50	19,980.7 e	14,985.5 e	11,988.4 e	9,990.4 e	5,709.7 e	3,654.2 e	2,537.7 e
1400S162-54	33	1,568.7 e	1,176.5 e	941.2 e	784.4 e	588.3 e	470.6 e	392.2 e
1400S162-54	50	1,568.7 e	1,176.5 e	941.2 e	784.4 e	588.3 e	470.6 e	392.2 e
1400S200-54	33	1,568.7 e	1,176.5 e	941.2 e	784.4 e	588.3 e	470.6 e	392.2 e
1400S200-54	50	1,568.7 e	1,176.5 e	941.2 e	784.4 e	588.3 e	470.6 e	392.2 e
1400S250-54	33	1,568.7 e	1,176.5 e	941.2 e	784.4 e	588.3 e	470.6 e	392.2 e
1400S250-54	50	1,568.7 e	1,176.5 e	941.2 e	784.4 e	588.3 e	470.6 e	392.2 e
1400S300-54	33	1,568.7 e	1,176.5 e	941.2 e	784.4 e	588.3 e	470.6 e	392.2 e
1400S300-54	50	1,568.7 e	1,176.5 e	941.2 e	784.4 e	588.3 e	470.6 e	392.2 e
1400S350-54	33	1,568.7 e	1,176.5 e	941.2 e	784.4 e	588.3 e	470.6 e	392.2 e
1400S350-54	50	1,568.7 e	1,176.5 e	941.2 e	784.4 e	588.3 e	470.6 e	392.2 e
1400S162-68	33	3,152.8 e	2,364.6 e	1,891.7 e	1,576.4 e	1,182.3 e	884.4 e	614.2 e
1400S162-68	50	3,152.8 e	2,364.6 e	1,891.7 e	1,576.4 e	1,182.3 e	945.8 e	788.2 e
1400S200-68	33	3,152.8 e	2,364.6 e	1,891.7 e	1,576.4 e	1,182.3 e	945.8 e	699.6 e
1400S200-68	50	3,152.8 e	2,364.6 e	1,891.7 e	1,576.4 e	1,182.3 e	945.8 e	788.2 e
1400S250-68	33	3,152.8 e	2,364.6 e	1,891.7 e	1,576.4 e	1,182.3 e	945.8 e	758.4 e
1400S250-68	50	3,152.8 e	2,364.6 e	1,891.7 e	1,576.4 e	1,182.3 e	945.8 e	788.2 e
1400S300-68	33	3,152.8 e	2,364.6 e	1,891.7 e	1,576.4 e	1,182.3 e	945.8 e	775.1 e
1400S300-68	50	3,152.8 e	2,364.6 e	1,891.7 e	1,576.4 e	1,182.3 e	945.8 e	788.2 e
1400S350-68	33	3,152.8 e	2,364.6 e	1,891.7 e	1,576.4 e	1,182.3 e	945.8 e	788.2 e
1400S350-68	50	3,152.8 e	2,364.6 e	1,891.7 e	1,576.4 e	1,182.3 e	945.8 e	788.2 e
1400S162-97	33	9,252.4 e	6,939.3 e	5,531.3 e	3,841.1 e	2,160.6 e	1,382.8 e	960.3 e
1400S162-97	50	9,252.4 e	6,939.3 e	5,551.4 e	4,626.2 e	3,065.4 e	1,961.9 e	1,362.4 e
1400S200-97	33	9,252.4 e	6,939.3 e	5,551.4 e	4,330.7 e	2,436.0 e	1,559.1 e	1,082.7 e
1400S200-97	50	9,252.4 e	6,939.3 e	5,551.4 e	4,626.2 e	3,469.6 e	2,227.5 e	1,546.9 e
1400S250-97	33	9,252.4 e	6,939.3 e	5,551.4 e	4,626.2 e	2,721.6 e	1,741.9 e	1,209.6 e
1400S250-97	50	9,252.4 e	6,939.3 e	5,551.4 e	4,626.2 e	3,469.6 e	2,399.4 e	1,666.2 e
1400S300-97	33	9,252.4 e	6,939.3 e	5,551.4 e	4,626.2 e	2,896.2 e	1,853.6 e	1,287.2 e
1400S300-97	50	9,252.4 e	6,939.3 e	5,551.4 e	4,626.2 e	3,469.6 e	2,543.8 e	1,766.5 e
1400S350-97	33	9,252.4 e	6,939.3 e	5,551.4 e	4,626.2 e	3,469.6 e	2,547.8 e	1,769.3 e
1400S350-97	50	9,252.4 e	6,939.3 e	5,551.4 e	4,626.2 e	3,469.6 e	2,775.7 e	2,270.2 e
1400S162-118	33	16,993.8 e	10,966.2 e	7,018.3 e	4,873.9 e	2,741.5 e	1,754.6 e	1,218.5 e
1400S162-118	50	16,993.8 e	12,745.4 e	10,030.5 e	6,965.6 e	3,918.2 e	2,507.6 e	1,741.4 e
1400S200-118	33	16,993.8 e	12,317.5 e	7,883.2 e	5,474.4 e	3,079.4 e	1,970.8 e	1,368.6 e
1400S200-118	50	16,993.8 e	12,745.4 e	10,196.3 e	7,869.2 e	4,426.4 e	2,832.9 e	1,967.3 e
1400S250-118	33	16,993.8 e	12,745.4 e	8,779.4 e	6,096.8 e	3,429.5 e	2,194.9 e	1,524.2 e
1400S250-118	50	16,993.8 e	12,745.4 e	10,196.3 e	8,496.9 e	4,915.5 e	3,145.9 e	2,184.7 e
1400S300-118	33	16,993.8 e	12,745.4 e	9,533.5 e	6,620.5 e	3,724.0 e	2,383.4 e	1,655.1 e
1400S300-118	50	16,993.8 e	12,745.4 e	10,196.3 e	8,496.9 e	5,256.1 e	3,363.9 e	2,336.0 e
1400S350-118	33	16,993.8 e	12,745.4 e	10,196.3 e	8,496.9 e	4,978.1 e	3,186.0 e	2,212.5 e
1400S350-118	50	16,993.8 e	12,745.4 e	10,196.3 e	8,496.9 e	6,372.7 e	4,539.2 e	3,152.2 e
1600S162-68	33	2,749.7 e	2,062.3 e	1,649.8 e	1,374.8 e	1,031.1 e	824.9 e	687.4 e
1600S162-68	50	2,749.7 e	2,062.3 e	1,649.8 e	1,374.8 e	1,031.1 e	824.9 e	687.4 e
1600S200-68	33	2,749.7 e	2,062.3 e	1,649.8 e	1,374.8 e	1,031.1 e	824.9 e	687.4 e
1600S200-68	50	2,749.7 e	2,062.3 e	1,649.8 e	1,374.8 e	1,031.1 e	824.9 e	687.4 e
1600S250-68	33	2,749.7 e	2,062.3 e	1,649.8 e	1,374.8 e	1,031.1 e	824.9 e	687.4 e
1600S250-68	50	2,749.7 e	2,062.3 e	1,649.8 e	1,374.8 e	1,031.1 e	824.9 e	687.4 e
1600S300-68	33	2,749.7 e	2,062.3 e	1,649.8 e	1,374.8 e	1,031.1 e	824.9 e	687.4 e
1600S300-68	50	2,749.7 e	2,062.3 e	1,649.8 e	1,374.8 e	1,031.1 e	824.9 e	687.4 e
1600S350-68	33	2,749.7 e	2,062.3 e	1,649.8 e	1,374.8 e	1,031.1 e	824.9 e	687.4 e
1600S350-68	50	2,749.7 e	2,062.3 e	1,649.8 e	1,374.8 e	1,031.1 e	824.9 e	687.4 e
1600S162-97	33	8,057.9 e	6,043.4 e	4,834.7 e	4,028.9 e	2,541.1 e	1,626.3 e	1,129.4 e
1600S162-97	50	8,057.9 e	6,043.4 e	4,834.7 e	4,028.9 e	3,021.7 e	2,290.6 e	1,590.7 e
1600S200-97	33	8,057.9 e	6,043.4 e	4,834.7 e	4,028.9 e	2,856.2 e	1,828.0 e	1,269.4 e
1600S200-97	50	8,057.9 e	6,043.4 e	4,834.7 e	4,028.9 e	3,021.7 e	2,417.4 e	1,801.9 e
1600S250-97	33	8,057.9 e	6,043.4 e	4,834.7 e	4,028.9 e	3,021.7 e	2,036.2 e	1,414.0 e
1600S250-97	50	8,057.9 e	6,043.4 e	4,834.7 e	4,028.9 e	3,021.7 e	2,417.4 e	1,935.8 e
1600S300-97	33	8,057.9 e	6,043.4 e	4,834.7 e	4,028.9 e	3,021.7 e	2,161.2 e	1,500.9 e
1600S300-97	50	8,057.9 e	6,043.4 e	4,834.7 e	4,028.9 e	3,021.7 e	2,417.4 e	2,014.5 e
1600S350-97	33	8,057.9 e	6,043.4 e	4,834.7 e	4,028.9 e	3,021.7 e	2,417.4 e	1,787.9 e
1600S350-97	50	8,057.9 e	6,043.4 e	4,834.7 e	4,028.9 e	3,021.7 e	2,417.4 e	2,014.5 e
1600S162-118	33	14,783.8 e	11,087.9 e	8,346.9 e	5,796.5 e	3,260.5 e	2,086.7 e	1,449.1 e
1600S162-118	50	14,783.8 e	11,087.9 e	8,870.3 e	7,391.9 e	4,614.9 e	2,953.5 e	2,051.1 e
1600S200-118	33	14,783.8 e	11,087.9 e	8,870.3 e	6,483.4 e	3,646.9 e	2,334.0 e	1,620.8 e
1600S200-118	50	14,783.8 e	11,087.9 e	8,870.3 e	7,391.9 e	5,196.6 e	3,325.8 e	2,309.6 e
1600S250-118	33	14,783.8 e	11,087.9 e	8,870.3 e	7,192.3 e	4,045.7 e	2,589.2 e	1,798.1 e
1600S250-118	50	14,783.8 e	11,087.9 e	8,870.3 e	7,391.9 e	5,543.9 e	3,681.6 e	2,556.6 e
1600S300-118	33	14,783.8 e	11,087.9 e	8,870.3 e	7,391.9 e	4,379.1 e	2,802.6 e	1,946.2 e
1600S300-118	50	14,783.8 e	11,087.9 e	8,870.3 e	7,391.9 e	5,543.9 e	3,926.3 e	2,726.6 e
1600S350-118	33	14,783.8 e	11,087.9 e	8,870.3 e	7,391.9 e	5,091.2 e	3,258.4 e	2,262.8 e
1600S350-118	50	14,783.8 e	11,087.9 e	8,870.3 e	7,391.9 e	5,543.9 e	4,435.2 e	3,134.0 e

" e " Requires web stiffeners at end supports

Web Crippling Loads

Conditions

Complies with 2009 & 2012 International Building Code (IBC)

Web Crippling Load Table Notes

1. Listed allowable loads apply only to channel members with stiffened flanges (S-sections).
2. For back-to-back members, the listed allowable loads are for the entire two-member assembly.
3. Listed allowable loads are based on members 'fastened to supports', except back-to-back members under two-flange loading (Conditions 3 and 4) for which data for 'fastened to support' is unavailable in the 2007 AISI Specification.
4. For back-to-back members, the distance between the web connectors and the flange shall be kept to a minimum.
5. Listed allowable loads are for unpunched webs. Capacity reductions for end and interior one flange loading (Conditions 1 and 2) near punchouts may be calculated per 2007 AISI Specification section C3.4.2.
6. "h" refers to the flat dimension of the web. See Web Depth-to-Thickness Ratios table on page 3.
7. See page 2 for additional notes.

Web Crippling Conditions

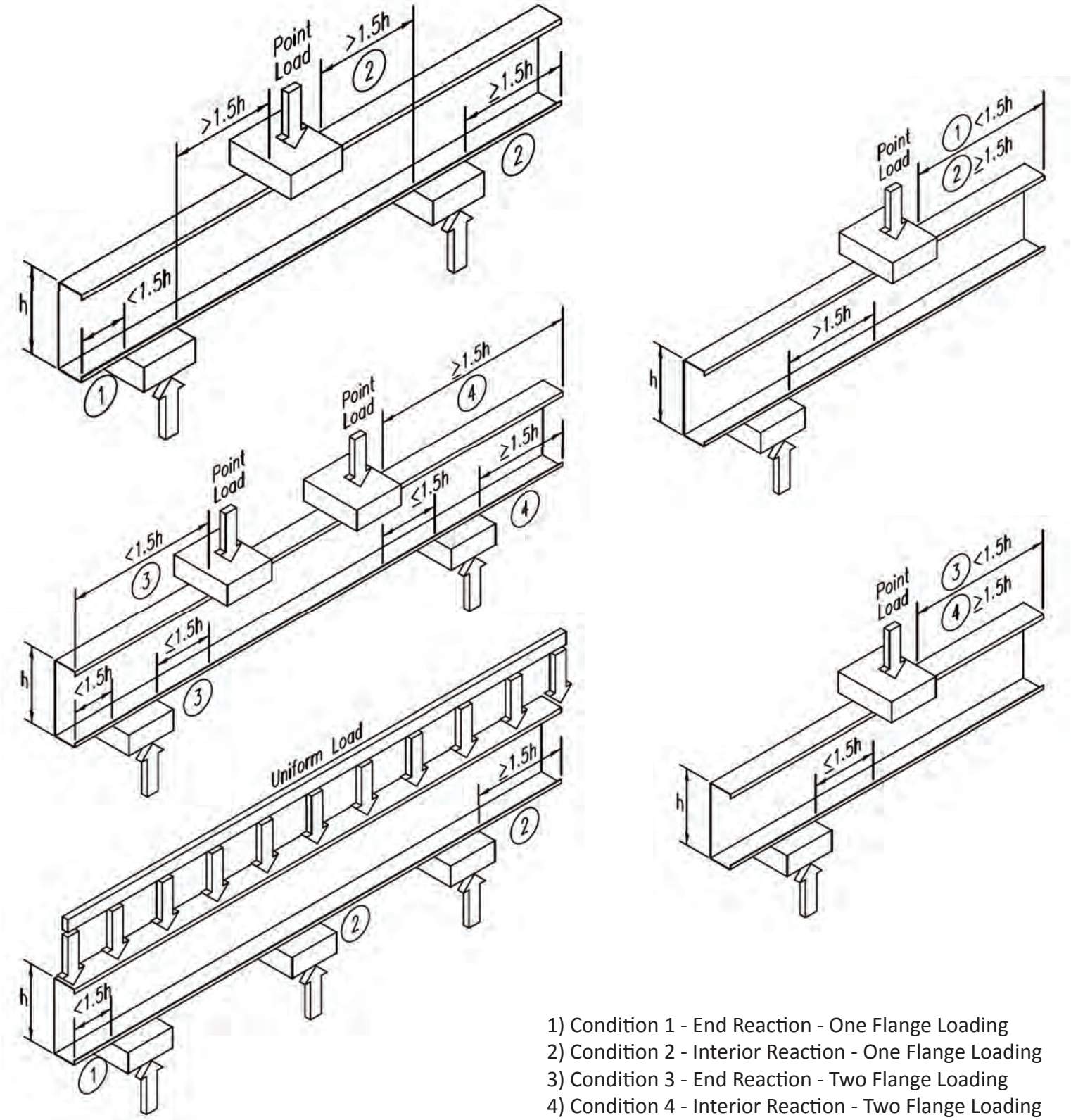

1) Condition 1 - End Reaction - One Flange Loading
2) Condition 2 - Interior Reaction - One Flange Loading
3) Condition 3 - End Reaction - Two Flange Loading
4) Condition 4 - Interior Reaction - Two Flange Loading

Web Crippling Load Tables

See Web Crippling Load Table Notes on page 44.

Single Members

Complies with 2009 & 2012 International Building Code (IBC)

Allowable Web Crippling Loads (lbs) — Single Members													
Designator Depth-Thickness	Yield Strength (ksi)	Condition 1 - Fastened to Support			Condition 2 - Fastened to Support			Condition 3 - Fastened to Support			Condition 4 - Fastened to Support		
		Bearing Length (in.)			Bearing Length (in.)			Bearing Length (in.)			Bearing Length (in.)		
		1	3.5	6	1	3.5	6	1	3.5	6	1	3.5	6
162S__-18	33	55	89[1]	112[1,2]	87	125[1]	151[1,2]	45	64[1]	76[1,2]	122	161[1]	186[1,2]
162S__-27	33	122	194[1]	242[1,2]	218	304[1]	361[1,2]	111	151[1]	178[1,2]	290	371[1]	425[1,2]
162S__-30	33	148	233[1]	290[1]	269	373[1]	442[1]	137	185[1]	217[1]	356	452[1]	516[1]
162S__-33	33	180	282[1]	350[1]	336	462[1]	545[1]	170	229[1]	267[1]	441	557[1]	634[1]
162S__-43	33	298	459[1]	566[1]	589	793[1]	929[1]	297	390[1]	452[1]	764	946[1]	1,067[1]
162S__-54	33	447	678[1]	832[1]	904	1,196[1]	1,390[1]	471	609[1]	700[1]	1,203	1,466[1]	1,642[1]
162S__-54	50	677	1,027[1]	1,260[1]	1,370	1,812[1]	2,105[1]	714	922[1]	1,061[1]	1,823	2,222[1]	2,487[1]
162S__-68	33	672	1004[1]	1,225[1]	1,386	1,801[1]	2,077[1]	750	952[1]	1,087[1]	1,901	2,282[1]	2,536[1]
162S__-68	50	1,019	1,522[1]	1,856[1]	2,100	2,729[1]	3,147[1]	1,136	1,443[1]	1,646[1]	2,880	3,458[1]	3,842[1]
250S__-18	33	52	84	106[1,2]	85	122	147[1,2]	37	51	61[1,2]	109	145	168[1,2]
250S__-27	33	117	186	231[1,2]	213	298	354[1,2]	96	130	153[1,2]	268	343	393[1,2]
250S__-30	33	141	223	277[1]	264	365	433[1]	119	161	189[1]	330	420	479[1]
250S__-33	33	173	271	336[1]	330	453	535[1]	150	201	235[1]	411	519	591[1]
250S__-43	33	287	443	547[1]	580	780	913[1]	267	351	407[1]	720	892	1,006[1]
250S__-54	33	433	657	806[1]	891	1,178	1,369[1]	430	556	639[1]	1,142	1,392	1,558[1]
250S__-54	50	656	996	1,222[1]	1,350	1,785	2,075[1]	652	842	968[1]	1,730	2,109	2,361[1]
250S__-68	33	654	977	1,191[1]	1,368	1,778	2,050[1]	693	880	1,004[1]	1,815	2,179	2,421[1]
250S__-68	50	990	1,480	1,805[1]	2,073	2,693	3,106[1]	1,049	1,333	1,521[1]	2,750	3,302	3,669[1]
350S__-18	33	49	80	100[2]	83	119	143[2]	28	40	48[2]	98	130	150[2]
350S__-27	33	112	177	221[2]	209	292	347[2]	81	111	130[2]	247	316	362[2]
350S__-30	33	135	214	266	259	359	425	103	139	163	306	389	445
350S__-33	33	166	260	323	324	445	526	131	175	205	384	484	551
350S__-43	33	278	428	528	571	768	900	240	315	365	680	842	949
350S__-54	33	420	638	783	879	1,162	1,351	392	507	583	1,086	1,324	1,482
350S__-54	50	637	967	1,186	1,331	1,761	2,046	594	768	883	1,645	2,005	2,245
350S__-68	33	637	951	1,160	1,351	1,756	2,025	640	813	928	1,736	2,085	2,317
350S__-68	50	965	1,441	1,758	2,047	2,660	3,068	970	1,232	1,406	2,631	3,159	3,510
362S__-18	33	49	79	99[2]	82	119	143[2]	27	39	46[2]	97	128	149[2]
362S__-27	33	111	177	220[2]	209	291	346[2]	80	108	127[2]	245	313	359[2]
362S__-30	33	135	213	265	258	358	424	101	136	160	304	386	441
362S__-33	33	165	259	322	323	444	525	129	173	202	381	480	547
362S__-43	33	277	427	526	570	767	898	236	311	360	675	836	943
362S__-54	33	419	636	780	877	1,160	1,348	388	501	577	1,079	1,316	1,473
362S__-54	50	634	963	1,182	1,329	1,758	2,043	588	760	874	1,635	1,994	2,232
362S__-68	33	635	948	1,157	1,349	1,753	2,022	635	806	920	1,,728	2,074	2,305
362S__-68	50	962	1,437	1,752	2044	2,657	3,064	961	1,221	1,393	2,618	3,143	3,492
400S__-27	33	109	174	217[2]	207	289	344[2]	75	102	120[2]	238	305	349[2]
400S__-30	33	133	210	261	257	356	421	95	129	151	296	376	429
400S__-33	33	163	256	317	322	442	522	122	164	192	372	469	534
400S__-43	33	274	422	520	567	763	893	227	299	346	662	819	924
400S__-54	33	415	629	772	873	1,155	1,342	376	485	558	1,061	1,293	1,448
400S__-54	50	628	954	1,170	1,323	1,750	2,034	569	735	846	1,607	1,960	2,194
400S__-68	33	629	940	1,147	1,344	1,746	2,014	617	784	895	1,702	2,044	2,271
400S__-68	50	953	1,424	1,737	2,036	2,646	3,051	936	1,188	1,356	2,579	3,096	3,440

[1] Bearing length to web height ratio, N/h, exceeds NASPEC limit of 2

[2] Bearing Length to thickness ratio, N/t, exceeds NASPEC limit of 210

[1,2] Bearing length to web height ratio, N/h, exceeds NASPEC limit of 2 and bearing Length to thickness ratio, N/t, exceeds NASPEC limit of 210

Web Crippling Load Tables

See Web Crippling Load Table Notes on page 44.

Single Members

Complies with 2009 & 2012 International Building Code (IBC)

Allowable Web Crippling Loads (lbs) — Single Members													
Designator Depth-Thickness	Yield Strength (ksi)	Condition 1 - Fastened to Support			Condition 2 - Fastened to Support			Condition 3 - Fastened to Support			Condition 4 - Fastened to Support		
		Bearing Length (in.)			Bearing Length (in.)			Bearing Length (in.)			Bearing Length (in.)		
		1	3.5	6	1	3.5	6	1	3.5	6	1	3.5	6
550S__-27	33	103	164	205[2]	202	282	336[2]	58	79	93[2]	214	274	314[2]
550S__-30	33	126	199	248	251	348	412	76	103	120	268	341	389
550S__-33	33	155	243	302	315	432	511	100	134	157	339	428	487
550S__-43	33	262	405	499	556	749	877	195	256	297	614	760	858
550S__-54	33	400	607	745	859	1,136	1,320	331	428	493	995	1,213	1,358
550S__-54	50	606	920	1,128	1,302	1,722	2,001	502	649	746	1,508	1,838	2,058
550S__-68	33	609	910	1,111	1,324	1,721	1,985	557	707	807	1,611	1,934	2,149
550S__-68	50	923	1,380	1,683	2,007	2,608	3,007	844	1,071	1,223	2,441	2,931	3,256
600S__-30	33	124	196	243	249	345	409	70	95	111	260	330	377
600S__-33	33	153	240	297	313	430	507	93	125	146	329	416	473
600S__-43	33	259	400	493	553	745	872	185	243	282	600	743	838
600S__-54	33	395	600	736	855	1,131	1,314	318	411	473	975	1,189	1,331
600S__-54	50	599	909	1,116	1,295	1,713	1,991	482	623	716	1,478	1,802	2,017
600S__-68	33	604	902	1,100	1,318	1,713	1,976	539	684	781	1,583	1,901	2,113
600S__-68	50	914	1,366	1,666	1,998	2,596	2,994	816	1,036	1,183	2,399	2,881	3,201
600S__-97	33	1,157	1,684	2,034	2,575	3,260	3,714	1,175	1,455	1,641	3,306	3,884	4,267
600S__-97	50	1,752	2,551	3,081	3,902	4,939	5,628	1,781	2,205	2,487	5,010	5,885	6,466
600S__-118	50	2,528	3,625	4,354	5,698	7,108	8,046	2,734	3,339	3,741	7,555	8,772	9,581
800S__-43	33	247	381	470	542	730	854	150	197	228	548	678	765
800S__-54	33	379	576	706	839	1,110	1,290	270	349	402	904	1,102	1,234
800S__-54	50	575	872	1,070	1,272	1,682	1,955	409	529	608	1,370	1,670	1,869
800S__-68	33	582	870	1,061	1,297	1,686	1,944	473	600	685	1,485	1,783	1,981
800S__-68	50	882	1,318	1,607	1,966	2,555	2,946	716	910	1,038	2,250	2,701	3,001
800S__-97	33	1,123	1,635	1,975	2,541	3,216	3,665	1,068	1,322	1,491	3,142	3,691	4,056
800S__-97	50	1,702	2,477	2,992	3,850	4,873	5,553	1,618	2,003	2,259	4,761	5,593	6,145
800S__-118	50	2,462	3,531	4,241	5,629	7,023	7,949	2,518	3,075	3,445	7,223	8,387	9,160
1000S__-54	33	365	554	680	826	1,092	1,269	228	295	339	841	1,026	1,148
1000S__-54	50	553	840	1031	1,251	1,655	1,923	346	447	514	1,275	1,554	1,740
1000S__-68	33	563	842	1027	1,279	1,662	1,917	415	527	602	1,398	1,679	1,865
1000S__-68	50	854	1275	1555	1,938	2,518	2,904	629	799	912	2,119	2,544	2,826
1000S__-97	33	1094	1592	1923	2,511	3,178	3,622	974	1,206	1,360	2,999	3,523	3,871
1000S__-97	50	1657	2412	2914	3,805	4,815	5,487	1,476	1,827	2,060	4,545	5,338	5,866
1000S__-118	50	2405	3449	4143	5,569	6,948	7,864	2,330	2,845	3,187	6,934	8,051	8,794
1200S__-68	33	547	816	996	1,262	1,640	1,892	363	462	527	1,320	1,585	1,762
1200S__-68	50	828	1,237	1,509	1,913	2,485	2,866	551	699	798	2,001	2,402	2,669
1200S__-97	33	1,068	1,554	1,877	2,484	3,144	3,583	889	1,101	1,242	2,871	3,372	3,705
1200S__-97	50	1,618	2,355	2,844	3,764	4,764	5,428	1,348	1,668	1,882	4,350	5,109	5,614
1200S__-118	50	2,354	3,375	4,054	5,515	6,881	7,788	2,161	2,638	2,956	6,675	7,750	8,465
1400S__-68	33	531	793	968	1,247	1,621	1,869	316	401	458	1,249	1,500	1,666
1400S__-68	50	805	1,202	1,466	1,889	2,455	2,831	479	608	694	1,892	2,272	2,525
1400S__-97	33	1,043	1,519	1,835	2,459	3,113	3,547	812	1,005	1,134	2,753	3,234	3,553
1400S__-97	50	1,581	2,301	2,780	3,726	4,716	5,374	1,230	1,523	1,718	4,171	4,900	5,384
1400S__-118	50	2,307	3,308	3,973	5,466	6,819	7,719	2,006	2,449	2,744	6,437	7,474	8,164
1600S__-97	33	1,021	1,486	1,796	2,437	3,084	3,514	740	916	1,033	2,644	3,105	3,412
1600S__-97	50	1,547	2,252	2,721	3,692	4,673	5,324	1,121	1,388	1,566	4,005	4,705	5,170
1600S__-118	50	2,263	3,245	3,898	5,420	6,762	7,654	1,862	2,274	2,548	6,217	7,219	7,884

[1] Bearing length to web height ratio, N/h, exceeds NASPEC limit of 2
[2] Bearing Length to thickness ratio, N/t, exceeds NASPEC limit of 210

[1,2] Bearing length to web height ratio, N/h, exceeds NASPEC limit of 2 and bearing Length to thickness ratio, N/t, exceeds NASPEC limit of 210

Web Crippling Load Tables

See Web Crippling Load Table Notes on page 44.

Back-to-Back Members

Complies with 2009 & 2012 International Building Code (IBC)

Allowable Web Crippling Loads (lbs) — Back-to-Back Members													
Designator Depth-Thickness	Yield Strength (ksi)	Condition 1 - Fastened to Support			Condition 2 - Fastened to Support			Condition 3 - Unfastened to Support			Condition 4 - Unfastened to Support		
		Bearing Length (in)			Bearing Length (in)			Bearing Length (in)			Bearing Length (in)		
		1	3.5	6	1	3.5	6	1	3.5	6	1	3.5	6
162S__-18	33	247	392[1]	488[1,2]	256	316[1]	356[1,2]	151	200[1]	232[1,2]	305	403[1]	468[1,2]
162S__-27	33	535	826[1]	1,020[1,2]	609	730[1]	811[1,2]	368	472[1]	540[1,2]	771	987[1]	1,131[1,2]
162S__-30	33	642	985[1]	1,213[1]	747	890[1]	985[1]	454	577[1]	659[1]	957	1,216[1]	1,389[1]
162S__-33	33	779	1,186[1]	1,457[1]	926	1,097[1]	1,211[1]	565	713[1]	812[1]	1,200	1,515[1]	1,724[1]
162S__-43	33	1,275	1,907[1]	2,327[1]	1,604	1,870[1]	2,047[1]	988	1,223[1]	1,380[1]	2,132	2,640[1]	2,978[1]
162S__-54	33	1,898	2,791[1]	3,384[1]	2,495	2,872[1]	3,123[1]	1,569	1,913[1]	2,141[1]	3,393	4,136[1]	4,630[1]
162S__-54	50	2,875	4,229[1]	5,128[1]	3,780	4,352[1]	4,731[1]	2,377	2,898[1]	3,244[1]	5,141	6,267[1]	7,016[1]
162S__-68	33	2,835	4,099[1]	4,939[1]	3,892	4,426[1]	4,781[1]	2,500	3,001[1]	3,335[1]	5,406	6,491[1]	7,212[1]
162S__-68	50	4,296	6,211[1]	7,484[1]	5,896	6,706[1]	7,244[1]	3,787	4,548[1]	5,053[1]	8,191	9,835[1]	10,928[1]
250S__-18	33	247	391[1]	487[1,2]	255	314[1]	353[1,2]	129	171[1]	198[1,2]	261	345[1]	400[1,2]
250S__-27	33	534	825[1]	1,018[1,2]	605	726[1]	806[1,2]	329	421[1]	482[1,2]	688	881[1]	1,010[1,2]
250S__-30	33	641	983[1]	1,211[1]	742	885[1]	980[1]	408	519[1]	593[1]	861	1,094[1]	1,249[1]
S250__-33	33	777	1,184[1]	1,454[1]	921	1,091[1]	1,204[1]	512	647[1]	736[1]	1,088	1,373[1]	1,562[1]
250S__-43	33	1,273	1,904[1]	2,323[1]	1,597	1,862[1]	2,038[1]	910	1,127[1]	1,271[1]	1,964	2,432[1]	2,743[1]
250S__-54	33	1,895	2,787[1]	3,380[1]	2,484	2,860[1]	3,109[1]	1,461	1,781[1]	1,993[1]	3,159	3,851[1]	4,311[1]
250S__-54	50	2,871	4,223[1]	5,121[1]	3,764	4,333[1]	4,711[1]	2,213	2,698[1]	3,020[1]	4,786	5,835[1]	6,532[1]
250S__-68	33	2,832	4,094[1]	4,933[1]	3,877	4,409[1]	4,763[1]	2,347	2,819[1]	3,132[1]	5,077	6,096[1]	6,773[1]
250S__-68	50	4,291	6,203[1]	7,474[1]	5,874	6,680[1]	7,216[1]	3,557	4,271[1]	4,745[1]	7,692	9,236[1]	10,263[1]
350S__-18	33	246	390[1]	486[1,2]	253	312[1]	351[1,2]	109	144[1]	167[1,2]	220	291[1]	338[1,2]
350S__-27	33	533	823[1]	1,016[1,2]	602	722[1]	802[1,2]	292	374[1]	429[1,2]	611	783[1]	897[1,2]
350S__-30	33	640	981[1]	1,208[1]	739	880[1]	975[1]	366	465[1]	531[1]	771	981[1]	1,120[1]
350S__-33	33	776	1,182[1]	1,452[1]	917	1,086[1]	1,198[1]	463	585[1]	665[1]	984	1,241[1]	1,412[1]
350S__-43	33	1,272	1,901[1]	2,320[1]	1,590	1,854[1]	2,029[1]	838	1,037[1]	1,170[1]	1,808	2,239[1]	2,525[1]
350S__-54	33	1,892	2,783[1]	3,375[1]	2,474	2,849[1]	3,097[1]	1,361	1,659[1]	1,857[1]	2,943	3,588[1]	4,016[1]
350S__-54	50	2,867	4,217[1]	5,114[1]	3,749	4,316[1]	4,693[1]	2,062	2,514[1]	2,814[1]	4,459	5,436[1]	6,085[1]
350S__-68	33	2,829	4,089[1]	4,927[1]	3,863	4,393[1]	4,746[1]	2,208	2,652[1]	2,946[1]	4,776	5,735[1]	6,372[1]
350S__-68	50	4,286	6,196[1]	7,466[1]	5,853	6,657[1]	7,191[1]	3,346	4,018[1]	4,464[1]	7,236	8,689[1]	9,654[1]
362S__-18	33	246	390[1]	486[1,2]	253	311[1]	350[1,2]	107	141[1]	164[1,2]	215	285[1]	330[1,2]
362S__-27	33	533	823[1]	1,015[1,2]	602	722[1]	801[1,2]	288	369[1]	422[1,2]	603	772[1]	884[1,2]
362S__-30	33	640	981[1]	1,208[1]	738	880[1]	974[1]	361	459[1]	524[1]	761	968[1]	1,105[1]
362S__-33	33	776	1,182[1]	1,452[1]	916	1,085[1]	1,197[1]	458	578[1]	657[1]	972	1,226[1]	1,395[1]
362S__-43	33	1,271	1,901[1]	2,319[1]	1,589	1,853[1]	2,028[1]	830	1,027[1]	1,159[1]	1,790	2,217[1]	2,501[1]
362S__-54	33	1,892	2,783[1]	3,375[1]	2,473	2,847[1]	3,096[1]	1,349	1,645[1]	1,842[1]	2,918	3,558[1]	3,983[1]
362S__-54	50	2,867	4,217[1]	5,113[1]	3,747	4,314[1]	4,691[1]	2,045	2,493[1]	2,790[1]	4,422	5,391[1]	6,035[1]
362S__-68	33	2,828	4,089[1]	4,927[1]	3,861	4,392[1]	4,744[1]	2,193	2,633[1]	2,925[1]	4,742	5,694[1]	6,326[1]
362S__-68	50	4,285	6,195[1]	7,465[1]	5,851	6,654[1]	7,188[1]	3,322	3,989[1]	4,432[1]	7,185	8,627[1]	9,585[1]
400S__-27	33	533	822	1,015[1,2]	600	720	800[1,2]	276	353	405[1,2]	577	739	847[1,2]
400S__-30	33	639	981	1,208[1]	737	878	972[1]	347	441	504[1]	732	931	1,063[1]
400S__-33	33	776	1,181	1,451[1]	915	1,083	1,195[1]	442	557	634[1]	937	1,183	1,346[1]
400S__-43	33	1,271	1,900	2,318[1]	1,587	1,850	2,025[1]	806	998	1,126[1]	1,739	2,154	2,429[1]
400S__-54	33	1,891	2,782	3,373[1]	2,470	2,844	3,092	1,317	1,605	1,797[1]	2,848	3,472	3,886[1]
400S__-54	50	2,866	4,215	5,111[1]	3,743	4,309	4,685[1]	1,995	2,432	2,723[1]	4,315	5,260	5,889[1]
400S__-68	33	2,827	4,087	4,925[1]	3,857	4,387	4,739[1]	2,147	2,578	2,865[1]	4,644	5,576	6,195[1]
400S__-68	50	4,284	6,193	7,462[1]	5,844	6,646	7,180[1]	3,253	3,906	4,340[1]	7,036	8,448	9,387[1]

[1] Bearing length to web height ratio, N/h, exceeds NASPEC limit of 2

[2] Bearing Length to thickness ratio, N/t, exceeds NASPEC limit of 210

[1,2] Bearing length to web height ratio, N/h, exceeds NASPEC limit of 2 and bearing Length to thickness ratio, N/t, exceeds NASPEC limit of 210

Web Crippling Load Tables

See Web Crippling Load Table Notes on page 44.

Back-to-Back Members

Complies with 2009 & 2012 International Building Code (IBC)

Allowable Web Crippling Loads (lbs) — Back-to-Back Members													
Designator Depth-Thickness	Yield Strength (ksi)	Condition 1 - Fastened to Support			Condition 2 - Fastened to Support			Condition 3 - Unfastened to Support			Condition 4 - Unfastened to Support		
		Bearing Length (in.)			Bearing Length (in.)			Bearing Length (in.)			Bearing Length (in.)		
		1	3.5	6	1	3.5	6	1	3.5	6	1	3.5	6
550S__-27	33	531	821	1,013[1,2]	597	716	795[1,2]	233	298	341[1,2]	487	624	715[1,2]
550S__-30	33	638	979	1,205[1]	732	873	966[1]	298	378	432[1]	627	798	911[1]
550S__-33	33	774	1,179	1,448[1]	909	1,077	1,188[1]	384	484	551[1]	815	1,028	1,170[1]
550S__-43	33	1,269	1,897	2,314[1]	1,579	1,841	2,015[1]	721	893	1,007[1]	1,556	1,927	2,174[1]
550S__-54	33	1,888	2,778	3,368[1]	2,459	2,831	3,078[1]	1,200	1,463	1,638[1]	2,595	3,164	3,542[1]
550S__-54	50	2,861	4,208	5,104[1]	3,725	4,289	4,663[1]	1,818	2,217	2,482[1]	3,933	4,794	5,367[1]
550S__-68	33	2,823	4,082	4,918[1]	3,841	4,369	4,719[1]	1,985	2,384	2,649[1]	4,294	5,156	5,728[1]
550S__-68	50	4,278	6,185	7,452[1]	5,820	6,619	7,150[1]	3,008	3,612	4,013[1]	6,506	7,812	8,680[1]
600S__-30	33	638	978	1,204[1]	731	871	965[1]	283	359	410[1]	596	757	865[1]
600S__-33	33	774	1,178	1,447[1]	908	1,075	1,186[1]	366	462	526[1]	778	982	1,117[1]
600S__-43	33	1,268	1,896	2,313[1]	1,576	1,838	2,011[1]	696	862	972[1]	1,501	1,859	2,097[1]
600S__-54	33	1,888	2,776	3,367[1]	2,455	2,827	3,073[1]	1,165	1,420	1,590[1]	2,520	3,072	3,439[1]
600S__-54	50	2,860	4,207	5,101[1]	3,720	4,283	4,657[1]	1,765	2,152	2,409[1]	3,818	4,654	5,210[1]
600S__-68	33	2,822	4,080	4,916[1]	3,836	4,363	4,713[1]	1,937	2,326	2,584[1]	4,189	5,030	5,589[1]
600S__-68	50	4,276	6,182	7,449[1]	5,812	6,611	7,141[1]	2,935	3,524	3,915[1]	6,347	7,621	8,467[1]
600S__-97	33	5,272	7,418	8,844[1]	7,641	8,543	9,142[1]	4,157	4,883	5,366[1]	8,991	10,562	11,605[1]
600S__-97	50	7,988	11,240	13,401[1]	11,577	12,944	13,852[1]	6,299	7,399	8,130[1]	13,623	16,002	17,583[1]
600S__-118	50	11,392	15,784	18,703[1]	17,084	18,933	20,161[1]	9,616	11,165	12,195[1]	20,797	24,147	26,374[1]
800S__-43	33	1,266	1,892	2,309	1,567	1,827	2,000	603	747	843	1,302	1,613	1,819
800S__-54	33	1,885	2,772	3,361	2,443	2,812	3,058	1,038	1,266	1,417	2,246	2,738	3,065
800S__-54	50	2,855	4,200	5,093	3,702	4,261	4,633	1,573	1,918	2,147	3,402	4,148	4,643
800S__-68	33	2,818	4,074	4,909	3,819	4,344	4,692	1,762	2,115	2,350	3,810	4,575	5,083
800S__-68	50	4,270	6,173	7,438	5,786	6,581	7,109	2,669	3,205	3,561	5,772	6,931	7,701
800S__-97	33	5,265	7,409	8,833	7,612	8,510	9,107	3,867	4,542	4,991	8,363	9,823	10,794
800S__-97	50	7,978	11,226	13,384	11,533	12,895	13,799	5,859	6,882	7,562	12,671	14,883	16,354
800S__-118	50	11,379	15,766	18,682	17,025	18,867	20,091	9,028	10,482	11,449	19,524	22,670	24,760
1000S__-54	33	1,882	2,768	3,356	2,432	2,800	3,044	927	1,130	1,265	2,005	2,445	2,737
1000S__-54	50	2,851	4,194	5,086	3,685	4,242	4,613	1,405	1,713	1,917	3,038	3,704	4,146
1000S__-68	33	2,814	4,069	4,902	3,804	4,326	4,674	1,608	1,931	2,145	3,478	4,176	4,640
1000S__-68	50	4,264	6,165	7,428	5,764	6,555	7,081	2,437	2,926	3,251	5,270	6,327	7,030
1000S__-97	33	5,260	7,401	8,824	7,587	8,482	9,077	3,613	4,244	4,663	7,813	9,178	10,085
1000S__-97	50	7,969	11,213	13,369	11,495	12,852	13,753	5,474	6,430	7,065	11,839	13,906	15,280
1000S__-118	50	11,368	15,751	18,663	16,974	18,810	20,031	8,515	9,887	10,798	18,416	21,383	23,354
1200S__-68	33	2,811	4,064	4,897	3,790	4,311	4,657	1,470	1,765	1,961	3179	3,817	4,241
1200S__-68	50	4,259	6,158	7,419	5,743	6,532	7,056	2,227	2,674	2,971	4817	5,784	6,426
1200S__-97	33	5,254	7,394	8,815	7,564	8,457	9,050	3,385	3,976	4,368	7320	8,598	9,448
1200S__-97	50	7,961	11,202	13,356	11,461	12,813	13,712	5,128	6,024	6,619	11091	13,028	14,315
1200S__-118	50	11,358	15,737	18,647	16,928	18,759	19,976	8,055	9,352	10,215	17420	20,227	22,091
1400S__-68	33	2,808	4,060	4,892	3,778	4,297	4,642	1,343	1,613	1,792	2,905	3,488	3,875
1400S__-68	50	4,255	6,151	7,411	5,724	6,510	7,033	2,035	2,444	2,715	4,401	5,285	5,872
1400S__-97	33	5,250	7,387	8,807	7,543	8,434	9,025	3,175	3,730	4,098	6,867	8,067	8,864
1400S__-97	50	7,954	11,192	13,344	11,429	12,778	13,674	4,811	5,651	6,210	10,405	12,223	13,430
1400S__-118	50	11,349	15,724	18,631	16,886	18,713	19,927	7,633	8,863	9,680	16,509	19,168	20,936
1600S__-97	33	5,245	7,381	8,800	7,524	8,412	9,002	2,981	3,502	3,848	6,448	7,574	8,322
1600S__-97	50	7,947	11,183	13,333	11,400	12,745	13,639	4,517	5,306	5,830	9,769	11,475	12,609
1600S__-118	50	11,340	15,712	18,617	16,846	18,669	19,880	7,242	8,409	9,184	15,663	18,187	19,864

[1] Bearing length to web height ratio, N/h, exceeds NASPEC limit of 2
[2] Bearing Length to thickness ratio, N/t, exceeds NASPEC limit of 210

[1,2] Bearing length to web height ratio, N/h, exceeds NASPEC limit of 2 and bearing Length to thickness ratio, N/t, exceeds NASPEC limit of 210

Ceiling Span Tables

Deflection Limit L/240

Complies with 2009 & 2012 International Building Code (IBC)

Ceiling Span Table Notes

1. For unbraced sections, allowable moment is based on the 2007 AISI Specification section C3.1.2 with weak axis and torsional unbraced length assumed to be the listed span (completely unbraced.) For mid-span braced sections, allowable moment based on 2007 AISI Specification section C3.1.2 with weak axis and torsional unbraced length assumed to be one-half of the listed span (bracing at midspan.)
2. Web crippling calculation based on bearing length = 1 inch.
3. Web crippling and shear capacity have not been reduced for punchouts. If web punchouts occur near supports members must be checked for reduced shear and web crippling in accordance with the 2007 AISI Specification.
4. Values are for simple span conditions.

Allowable Ceiling Spans — Deflection Limit L/240																			
Section	F_y	4 psf						6 psf						13 psf*					
		Lateral Support of Compression Flange						Lateral Support of Compression Flange						Lateral Support of Compression Flange					
		Unsupported			Midspan			Unsupported			Midspan			Unsupported			Midspan		
		Joist Spacing (in) o.c.			Joist Spacing (in) o.c.			Joist Spacing (in) o.c.			Joist Spacing (in) o.c.			Joist Spacing (in) o.c.			Joist Spacing (in) o.c.		
	(ksi)	12	16	24	12	16	24	12	16	24	12	16	24	12	16	24	12	16	24
162S125-18	33	7' 3"	6' 7"	5' 10"	8' 6"	7' 8"	6' 7"	6' 5"	5' 10"	5' 1"	7' 4"	6' 7"	5' 9"	5' 0"	4' 5"	3' 9"	5' 7"	4' 10"	3' 11"
162S125-27	33	8' 7"	7' 11"	7' 1"	9' 8"	8' 10"	7' 8"	7' 8"	7' 1"	6' 3"	8' 6"	7' 8"	6' 8"	6' 1"	5' 6"	4' 9"	6' 6"	5' 11"	5' 2"
162S125-30	33	9' 0"	8' 3"	7' 4"	10' 0"	9' 1"	7' 11"	8' 0"	7' 4"	6' 7"	8' 9"	7' 11"	6' 11"	6' 5"	5' 10"	5' 0"	6' 9"	6' 1"	5' 4"
162S125-33	33	9' 6"	8' 8"	7' 8"	10' 4"	9' 5"	8' 2"	8' 4"	7' 8"	6' 10"	9' 0"	8' 2"	7' 2"	6' 8"	6' 1"	5' 4"	7' 0"	6' 4"	5' 6"
162S137-27	33	9' 11"	9' 2"	8' 0"	10' 1"	9' 2"	8' 0"	8' 10"	8' 0"	7' 0"	8' 10"	8' 0"	7' 0"	6' 10"	6' 2"	5' 5"	6' 10"	6' 2"	5' 5"
162S137-30	33	10' 4"	9' 6"	8' 3"	10' 5"	9' 6"	8' 3"	9' 1"	8' 3"	7' 3"	9' 1"	8' 3"	7' 3"	7' 0"	6' 5"	5' 7"	7' 0"	6' 5"	5' 7"
162S137-33	33	10' 9"	9' 9"	8' 7"	10' 9"	9' 9"	8' 7"	9' 5"	8' 7"	7' 6"	9' 5"	8' 7"	7' 6"	7' 3"	6' 7"	5' 9"	7' 3"	6' 7"	5' 9"
250S125-18	33	8' 5"	7' 9"	6' 11"	11' 7"	10' 6"	9' 1"	7' 6"	6' 11"	6' 2"	10' 1"	9' 1"	7' 8"	6' 0"	5' 6"	4' 10" e	7' 5"	6' 3" e	5' 2" e
250S125-27	33	9' 8"	8' 11"	8' 0"	13' 5"	12' 2"	10' 7"	8' 8"	8' 0"	7' 2"	11' 8"	10' 7"	9' 3"	7' 0"	6' 6"	5' 9"	9' 0"	8' 2"	6' 10"
250S125-30	33	10' 1"	9' 3"	8' 3"	13' 10"	12' 7"	10' 11"	9' 0"	8' 3"	7' 5"	12' 1"	10' 11"	9' 7"	7' 3"	6' 8"	6' 0"	9' 4"	8' 5"	7' 3"
250S125-33	33	10' 6"	9' 8"	8' 7"	14' 3"	13' 0"	11' 4"	9' 4"	8' 7"	7' 8"	12' 6"	11' 4"	9' 11"	7' 6"	6' 11"	6' 2"	9' 7"	8' 9"	7' 7"
250S125-43	33	11' 9"	10' 10"	9' 7"	15' 6"	14' 1"	12' 4"	10' 5"	9' 7"	8' 6"	13' 7"	12' 4"	10' 9"	8' 4"	7' 8"	6' 10"	10' 6"	9' 6"	8' 4"
250S137-27	33	11' 0"	10' 2"	9' 2"	14' 0"	12' 9"	11' 1"	9' 10"	9' 2"	8' 2"	12' 3"	11' 1"	9' 9"	8' 0"	7' 5"	6' 8"	9' 6"	8' 7"	7' 6"
250S137-30	33	11' 5"	10' 6"	9' 5"	14' 5"	13' 2"	11' 6"	10' 2"	9' 5"	8' 5"	12' 8"	11' 6"	10' 0"	8' 3"	7' 8"	6' 10"	9' 9"	8' 10"	7' 9"
250S137-33	33	11' 10"	10' 11"	9' 9"	14' 11"	13' 7"	11' 10"	10' 7"	9' 9"	8' 9"	13' 1"	11' 10"	10' 4"	8' 7"	7' 11"	7' 1"	10' 1"	9' 2"	8' 0"
250S137-43	33	13' 3"	12' 2"	10' 10"	16' 3"	14' 9"	12' 11"	11' 9"	10' 10"	9' 7"	14' 2"	12' 11"	11' 3"	9' 5"	8' 8"	7' 9"	10' 11"	9' 11"	8' 8"
250S162-33	33	13' 6"	12' 5"	11' 2"	15' 8"	14' 3"	12' 5"	12' 1"	11' 2"	10' 0"	13' 8"	12' 5"	10' 10"	9' 10"	9' 1"	8' 1"	10' 7"	9' 7"	8' 5"
250S162-43	33	15' 0"	13' 9"	12' 3"	17' 1"	15' 6"	13' 6"	13' 4"	12' 3"	10' 11"	14' 11"	13' 6"	11' 10"	10' 9"	9' 11"	8' 10"	11' 6"	10' 5"	9' 2"
350S125-18	33	9' 2"	8' 6"	7' 6"	12' 6"	11' 5"	9' 11"	8' 3"	7' 6"	6' 8"	11' 0"	9' 11"	8' 5" e	6' 6"	5' 11" e	5' 3" e	8' 2" e	7' 2" e	6' 0" e
350S125-27	33	10' 7"	9' 9"	8' 9"	14' 11"	13' 9"	12' 3"	9' 5"	8' 9"	7' 9"	13' 4"	12' 3"	10' 7"	7' 7"	7' 1"	6' 4"	10' 4"	9' 3"	7' 9"
350S125-30	33	10' 11"	10' 1"	9' 0"	15' 5"	14' 2"	12' 9"	9' 9"	9' 0"	8' 1"	13' 9"	12' 9"	11' 2"	7' 11"	7' 3"	6' 6"	10' 11"	9' 9"	8' 3"
350S125-33	33	11' 4"	10' 5"	9' 4"	16' 0"	14' 9"	13' 2"	10' 1"	9' 4"	8' 4"	14' 3"	13' 2"	11' 9"	8' 2"	7' 7"	6' 9"	11' 5"	10' 4"	8' 10"
350S125-43	33	12' 7"	11' 7"	10' 4"	17' 7"	16' 3"	14' 6"	11' 2"	10' 4"	9' 2"	15' 8"	14' 6"	12' 11"	9' 0"	8' 3"	7' 5"	12' 7"	11' 6"	10' 1"
350S137-27	33	11' 11"	11' 0"	9' 11"	17' 0"	15' 9"	14' 1"	10' 8"	9' 11"	8' 11"	15' 3"	14' 1"	12' 4"	8' 8"	8' 1"	7' 3"	11' 11"	10' 7"	8' 11" e
350S137-30	33	12' 4"	11' 5"	10' 3"	17' 7"	16' 3"	14' 7"	11' 0"	10' 3"	9' 2"	15' 9"	14' 7"	12' 10"	9' 0"	8' 4"	7' 6"	12' 6"	11' 3"	9' 6"
350S137-33	33	12' 9"	11' 10"	10' 7"	18' 2"	16' 9"	15' 1"	11' 5"	10' 7"	9' 6"	16' 3"	15' 1"	13' 4"	9' 3"	8' 7"	7' 8"	13' 0"	11' 9"	10' 0"
350S137-43	33	14' 2"	13' 0"	11' 7"	19' 10"	18' 4"	16' 5"	12' 7"	11' 7"	10' 4"	17' 9"	16' 5"	14' 7"	10' 2"	9' 4"	8' 5"	14' 2"	12' 11"	11' 3"
350S162-33	33	14' 6"	13' 5"	12' 1"	20' 3"	18' 5"	16' 1"	13' 0"	12' 1"	10' 10"	17' 9"	16' 1"	14' 1"	10' 7"	9' 10"	8' 10"	13' 8"	12' 5"	10' 10"
350S162-43	33	16' 0"	14' 9"	13' 2"	22' 1"	20' 0"	17' 6"	14' 3"	13' 2"	11' 9"	19' 3"	17' 6"	15' 3"	11' 6"	10' 8"	9' 7"	14' 11"	13' 6"	11' 10"
362S125-18	33	9' 3"	8' 7"	7' 7"	12' 8"	11' 7"	10' 0"	8' 4"	7' 7"	6' 9"	11' 1"	10' 0"	8' 6" e	6' 7"	6' 0" e	5' 4" e	8' 3" e	7' 4" e	6' 1" e
362S125-27	33	10' 8"	9' 10"	8' 10"	15' 0"	13' 11"	12' 4"	9' 6"	8' 10"	7' 10"	13' 5"	12' 4"	10' 9"	7' 8"	7' 1"	6' 5"	10' 5"	9' 4"	7' 11"
362S125-30	33	11' 0"	10' 2"	9' 1"	15' 6"	14' 4"	12' 10"	9' 10"	9' 1"	8' 2"	13' 11"	12' 10"	11' 4"	8' 0"	7' 4"	6' 7"	11' 0"	9' 11"	8' 5"
362S125-33	33	11' 5"	10' 7"	9' 5"	16' 2"	14' 10"	13' 3"	10' 3"	9' 5"	8' 5"	14' 5"	13' 3"	11' 10"	8' 3"	7' 8"	6' 10"	11' 7"	10' 6"	9' 0"
362S125-43	33	12' 8"	11' 8"	10' 5"	17' 9"	16' 5"	14' 8"	11' 3"	10' 5"	9' 3"	15' 10"	14' 8"	13' 0"	9' 1"	8' 4"	7' 6"	12' 9"	11' 8"	10' 2"
362S137-27	33	12' 0"	11' 2"	10' 0"	17' 2"	15' 11"	14' 3"	10' 10"	10' 0"	9' 0"	15' 5"	14' 3"	12' 6"	8' 9"	8' 2"	7' 4"	12' 1"	10' 9"	9' 1" e
362S137-30	33	12' 5"	11' 6"	10' 4"	17' 8"	16' 5"	14' 8"	11' 2"	10' 4"	9' 3"	15' 10"	14' 8"	13' 0"	9' 1"	8' 5"	7' 6"	12' 8"	11' 5"	9' 8"
362S137-33	33	12' 11"	11' 11"	10' 8"	18' 4"	16' 11"	15' 2"	11' 6"	10' 8"	9' 7"	16' 5"	15' 2"	13' 6"	9' 4"	8' 8"	7' 9"	13' 2"	11' 11"	10' 2"
362S137-43	33	14' 3"	13' 2"	11' 8"	20' 0"	18' 6"	16' 7"	12' 8"	11' 8"	10' 5"	17' 11"	16' 7"	14' 9"	10' 3"	9' 5"	8' 6"	14' 5"	13' 2"	11' 5"
362S162-33	33	14' 8"	13' 7"	12' 2"	20' 10"	18' 11"	16' 6"	13' 2"	12' 2"	10' 11"	18' 2"	16' 6"	14' 5"	10' 8"	9' 11"	8' 11"	14' 1"	12' 9"	11' 2"
362S162-43	33	16' 2"	14' 11"	13' 4"	22' 8"	20' 7"	18' 0"	14' 5"	13' 4"	11' 11"	19' 10"	18' 0"	15' 9"	11' 8"	10' 9"	9' 8"	15' 4"	13' 11"	12' 2"
400S125-18	33	9' 6" e	8' 9" e	7' 10" e	13' 0" e	11' 11" e	10' 5" e	8' 6" e	7' 10" e	6' 11" e	11' 6" e	10' 5" e	8' 11" e	6' 9" e	6' 2" e	5' 6" e	8' 7" e	7' 8" e	6' 5" e
400S125-27	33	10' 11"	10' 1"	9' 1"	15' 5"	14' 3"	12' 9"	9' 9"	9' 1"	8' 1"	13' 10"	12' 9"	11' 2"	7' 11"	7' 4"	6' 7"	10' 10"	9' 9"	8' 3"
400S125-30	33	11' 4"	10' 5"	9' 4"	16' 0"	14' 9"	13' 2"	10' 1"	9' 4"	8' 4"	14' 3"	13' 2"	11' 9"	8' 2"	7' 7"	6' 9"	11' 5"	10' 4"	8' 9"
400S125-33	33	11' 9"	10' 10"	9' 8"	16' 7"	15' 3"	13' 8"	10' 6"	9' 8"	8' 8"	14' 9"	13' 8"	12' 2"	8' 6"	7' 10"	7' 0"	11' 11"	10' 11"	9' 4"
400S125-43	33	13' 0"	12' 0"	10' 8"	18' 3"	16' 10"	15' 0"	11' 7"	10' 8"	9' 6"	16' 3"	15' 0"	13' 5"	9' 4"	8' 7"	7' 8"	13' 1"	12' 0"	10' 7"
400S137-27	33	12' 4"	11' 5"	10' 3"	17' 7"	16' 4"	14' 8"	11' 1"	10' 3"	9' 2"	15' 10"	14' 8"	13' 0"	9' 0"	8' 4"	7' 6"	12' 7"	11' 3"	9' 6" e
400S137-30	33	12' 9"	11' 10"	10' 7"	18' 2"	16' 10"	15' 1"	11' 5"	10' 7"	9' 6"	16' 4"	15' 1"	13' 5"	9' 3"	8' 7"	7' 9"	13' 1"	11' 10"	10' 1"
400S137-33	33	13' 3"	12' 3"	10' 11"	18' 9"	17' 4"	15' 7"	11' 10"	10' 11"	9' 10"	16' 10"	15' 7"	13' 11"	9' 7"	8' 11"	8' 0"	13' 7"	12' 4"	10' 8"
400S137-43	33	14' 7"	13' 6"	12' 0"	20' 7"	19' 0"	17' 0"	13' 0"	12' 0"	10' 9"	18' 4"	17' 0"	15' 2"	10' 6"	9' 8"	8' 8"	14' 10"	13' 7"	11' 10"
400S162-33	33	15' 0"	13' 11"	12' 6"	21' 5"	19' 10"	17' 9"	13' 6"	12' 6"	11' 2"	19' 3"	17' 9"	15' 7"	10' 11"	10' 2"	9' 1"	15' 2"	13' 9"	11' 9"
400S162-43	33	16' 7"	15' 3"	13' 8"	23' 4"	21' 7"	19' 4"	14' 9"	13' 8"	12' 2"	20' 11"	19' 4"	16' 11"	11' 11"	11' 0"	9' 11"	16' 6"	15' 0"	13' 1"
600S125-27	33	12' 5" e	11' 6" e	10' 4" e	17' 11" e	16' 6" e	14' 9" e	11' 2" e	10' 4" e	9' 4" e	16' 0" e	14' 9" e	13' 2" e	9' 2" e	8' 6" e	7' 7" e	12' 11" e	11' 10" e	10' 4" e
600S125-30	33	12' 9"	11' 10"	10' 8"	18' 5"	17' 1"	15' 3"	11' 6"	10' 8"	9' 7"	16' 7"	15' 3"	13' 8"	9' 5"	8' 9"	7' 10"	13' 4"	12' 4"	10' 11" e
600S125-33	33	13' 2"	12' 3"	11' 0"	18' 11"	17' 7"	15' 10"	11' 10"	11' 0"	9' 10"	17' 0"	15' 10"	14' 2"	9' 8"	8' 11"	8' 1"	13' 10"	12' 9"	11' 5"
600S125-43	33	14' 6"	13' 4"	11' 11"	20' 6"	19' 0"	17' 0"	12' 11"	11' 11"	10' 8"	18' 4"	17' 0"	15' 3"	10' 5"	9' 8"	8' 8"	15' 0"	13' 11"	12' 6"
600S137-27	33	14' 0" e	13' 0" e	11' 9" e	20' 2" e	18' 8" e	16' 9" e	12' 7" e	11' 9" e	10' 6" e	18' 1" e	16' 9" e	15' 0" e	10' 4" e	9' 7" e	8' 7" e	14' 8" e	13' 7" e	11' 10" e
600S137-30	33	14' 5"	13' 4"	12' 0"	20' 10"	19' 3"	17' 3"	13' 0"	12' 0"	10' 10"	18' 8"	17' 3"	15' 6"	10' 7"	9' 10"	8' 10"	15' 2"	14' 0"	12' 5" e
600S137-33	33	14' 11"	13' 9"	12' 5"	21' 5"	19' 10"	17' 10"	13' 4"	12' 5"	11' 2"	19' 3"	17' 10"	16' 0"	10' 11"	10' 2"	9' 2"	15' 8"	14' 6"	12' 11" e
600S137-43	33	16' 3"	15' 0"	13' 5"	23' 1"	21' 5"	19' 3"	14' 6"	13' 5"	12' 0"	20' 9"	19' 3"	17' 4"	11' 9"	10' 11"	9' 10"	16' 11"	15' 9"	14' 2"
600S162-33	33	16' 11"	15' 8"	14' 1"	24' 5"	22' 8"	20' 5"	15' 2"	14' 1"	12' 8"	22' 0"	20' 5"	18' 5"	12' 5"	11' 7"	10' 5"	18' 0"	16' 8"	14' 9" e
600S162-43	33	18' 5"	17' 0"	15' 3"	26' 4"	24' 4"	21' 11"	16' 6"	15' 3"	13' 8"	23' 8"	21' 11"	19' 9"	13' 5"	12' 5"	11' 2"	19' 4"	17' 11"	16' 0"

* Loads that exceed 10 psf limit require an approved CP60 coating.
"e" web stiffeners required at ends.

Ceiling Span Tables

See Ceiling Span Table Notes on page 49.

Deflection Limit L/360

Complies with 2009 & 2012 International Building Code (IBC)

Allowable Ceiling Spans — Deflection Limit L/360																			
Section	F_y	4 psf						6 psf						13 psf*					
		Lateral Support of Compression Flange						Lateral Support of Compression Flange						Lateral Support of Compression Flange					
		Unsupported			Midspan			Unsupported			Midspan			Unsupported			Midspan		
		Joist Spacing (in) o.c.			Joist Spacing (in) o.c.			Joist Spacing (in) o.c.			Joist Spacing (in) o.c.			Joist Spacing (in) o.c.			Joist Spacing (in) o.c.		
	(ksi)	12	16	24	12	16	24	12	16	24	12	16	24	12	16	24	12	16	24
162S125-18	33	7' 3"	6' 7"	5' 10"	7' 5"	6' 9"	5' 11"	6' 5"	5' 10"	5' 1"	6' 6"	5' 11"	5' 1"	4' 11"	4' 5"	3' 9"	4' 11"	4' 6"	3' 10"
162S125-27	33	8' 6"	7' 8"	6' 9"	8' 6"	7' 8"	6' 9"	7' 5"	6' 9"	5' 10"	7' 5"	6' 9"	5' 10"	5' 9"	5' 2"	4' 6"	5' 9"	5' 2"	4' 6"
162S125-30	33	8' 9"	7' 11"	6' 11"	8' 9"	7' 11"	6' 11"	7' 8"	6' 11"	6' 1"	7' 8"	6' 11"	6' 1"	5' 11"	5' 4"	4' 8"	5' 11"	5' 4"	4' 8"
162S125-33	33	9' 0"	8' 2"	7' 2"	9' 0"	8' 2"	7' 2"	7' 11"	7' 2"	6' 3"	7' 11"	7' 2"	6' 3"	6' 1"	5' 6"	4' 10"	6' 1"	5' 6"	4' 10"
162S137-27	33	8' 10"	8' 0"	7' 0"	8' 10"	8' 0"	7' 0"	7' 9"	7' 0"	6' 2"	7' 9"	7' 0"	6' 2"	6' 0"	5' 5"	4' 9"	6' 0"	5' 5"	4' 9"
162S137-30	33	9' 1"	8' 3"	7' 3"	9' 1"	8' 3"	7' 3"	8' 0"	7' 3"	6' 4"	8' 0"	7' 3"	6' 4"	6' 2"	5' 7"	4' 11"	6' 2"	5' 7"	4' 11"
162S137-33	33	9' 5"	8' 7"	7' 6"	9' 5"	8' 7"	7' 6"	8' 3"	7' 6"	6' 6"	8' 3"	7' 6"	6' 6"	6' 4"	5' 9"	5' 1"	6' 4"	5' 9"	5' 1"
250S125-18	33	8' 5"	7' 9"	6' 11"	10' 3"	9' 3"	8' 1"	7' 6"	6' 11"	6' 2"	8' 11"	8' 1"	7' 0"	6' 0"	5' 6"	4' 10" e	6' 10"	6' 2" e	5' 2" e
250S125-27	33	9' 8"	8' 11"	8' 0"	11' 9"	10' 8"	9' 4"	8' 8"	8' 0"	7' 2"	10' 3"	9' 4"	8' 1"	7' 0"	6' 6"	5' 9"	7' 11"	7' 2"	6' 3"
250S125-30	33	10' 1"	9' 3"	8' 3"	12' 1"	11' 0"	9' 7"	9' 0"	8' 3"	7' 5"	10' 7"	9' 7"	8' 5"	7' 3"	6' 8"	6' 0"	8' 2"	7' 5"	6' 5"
250S125-33	33	10' 6"	9' 8"	8' 7"	12' 6"	11' 4"	9' 11"	9' 4"	8' 7"	7' 8"	10' 11"	9' 11"	8' 8"	7' 6"	6' 11"	6' 2"	8' 5"	7' 8"	6' 8"
250S125-43	33	11' 9"	10' 10"	9' 7"	13' 7"	12' 4"	10' 9"	10' 5"	9' 7"	8' 6"	11' 10"	10' 9"	9' 5"	8' 4"	7' 8"	6' 10"	9' 2"	8' 4"	7' 3"
250S137-27	33	11' 0"	10' 2"	9' 2"	12' 3"	11' 1"	9' 9"	9' 10"	9' 2"	8' 2"	10' 8"	9' 9"	8' 6"	8' 0"	7' 5"	6' 7"	8' 3"	7' 6"	6' 7"
250S137-30	33	11' 5"	10' 6"	9' 5"	12' 8"	11' 6"	10' 0"	10' 2"	9' 5"	8' 5"	11' 0"	10' 0"	8' 9"	8' 3"	7' 8"	6' 9"	8' 6"	7' 9"	6' 9"
250S137-33	33	11' 10"	10' 11"	9' 9"	13' 1"	11' 10"	10' 4"	10' 7"	9' 9"	8' 9"	11' 5"	10' 4"	9' 1"	8' 7"	7' 11"	7' 0"	8' 10"	8' 0"	7' 0"
250S137-43	33	13' 3"	12' 2"	10' 10"	14' 2"	12' 11"	11' 3"	11' 9"	10' 10"	9' 7"	12' 5"	11' 3"	9' 10"	9' 5"	8' 8"	7' 7"	9' 7"	8' 8"	7' 7"
250S162-33	33	13' 6"	12' 5"	10' 10"	13' 8"	12' 5"	10' 10"	12' 0"	10' 10"	9' 6"	12' 0"	10' 10"	9' 6"	9' 3"	8' 5"	7' 4"	9' 3"	8' 5"	7' 4"
250S162-43	33	14' 11"	13' 6"	11' 10"	14' 11"	13' 6"	11' 10"	13' 0"	11' 10"	10' 4"	13' 0"	11' 10"	10' 4"	10' 1"	9' 2"	8' 0"	10' 1"	9' 2"	8' 0"
350S125-18	33	9' 2"	8' 6"	7' 6"	12' 6"	11' 5"	9' 11"	8' 3"	7' 6"	6' 8"	11' 0"	9' 11"	8' 5" e	6' 6"	5' 11" e	5' 3" e	8' 2" e	7' 2" e	6' 0" e
350S125-27	33	10' 7"	9' 9"	8' 9"	14' 11"	13' 9"	12' 0"	9' 5"	8' 9"	7' 9"	13' 3"	12' 0"	10' 6"	7' 7"	7' 1"	6' 4"	10' 2"	9' 3"	7' 9"
350S125-30	33	10' 11"	10' 1"	9' 0"	15' 5"	14' 2"	12' 5"	9' 9"	9' 0"	8' 1"	13' 8"	12' 5"	10' 10"	7' 11"	7' 3"	6' 6"	10' 7"	9' 7"	8' 3"
350S125-33	33	11' 4"	10' 5"	9' 4"	16' 0"	14' 8"	12' 10"	10' 1"	9' 4"	8' 4"	14' 2"	12' 10"	11' 3"	8' 2"	7' 7"	6' 9"	10' 11"	9' 11"	8' 8"
350S125-43	33	12' 7"	11' 7"	10' 4"	17' 7"	16' 0"	13' 11"	11' 2"	10' 4"	9' 2"	15' 4"	13' 11"	12' 2"	9' 0"	8' 3"	7' 5"	11' 10"	10' 9"	9' 5"
350S137-27	33	11' 11"	11' 0"	9' 11"	15' 10"	14' 5"	12' 7"	10' 8"	9' 11"	8' 11"	13' 10"	12' 7"	11' 0"	8' 8"	8' 1"	7' 3"	10' 8"	9' 9"	8' 6"
350S137-30	33	12' 4"	11' 5"	10' 3"	16' 4"	14' 10"	13' 0"	11' 0"	10' 3"	9' 2"	14' 3"	13' 0"	11' 4"	9' 0"	8' 4"	7' 6"	11' 0"	10' 0"	8' 9"
350S137-33	33	12' 9"	11' 10"	10' 7"	16' 11"	15' 4"	13' 5"	11' 5"	10' 7"	9' 6"	14' 9"	13' 5"	11' 9"	9' 3"	8' 7"	7' 8"	11' 5"	10' 4"	9' 1"
350S137-43	33	14' 2"	13' 0"	11' 7"	18' 4"	16' 8"	14' 7"	12' 7"	11' 7"	10' 4"	16' 1"	14' 7"	12' 9"	10' 2"	9' 4"	8' 5"	12' 5"	11' 3"	9' 10"
350S162-33	33	14' 6"	13' 5"	12' 1"	17' 9"	16' 1"	14' 1"	13' 0"	12' 1"	10' 10"	15' 6"	14' 1"	12' 3"	10' 7"	9' 10"	8' 10"	11' 11"	10' 10"	9' 6"
350S162-43	33	16' 0"	14' 9"	13' 2"	19' 3"	17' 6"	15' 3"	14' 3"	13' 2"	11' 9"	16' 10"	15' 3"	13' 4"	11' 6"	10' 8"	9' 7"	13' 0"	11' 10"	10' 4"
362S125-18	33	9' 3"	8' 7"	7' 7"	12' 8"	11' 7"	10' 0"	8' 4"	7' 7"	6' 9"	11' 1"	10' 0"	8' 6" e	6' 7"	6' 0" e	5' 4" e	8' 3" e	7' 4" e	6' 1" e
362S125-27	33	10' 8"	9' 10"	8' 10"	15' 0"	13' 11"	12' 4"	9' 6"	8' 10"	7' 10"	13' 5"	12' 4"	10' 9"	7' 8"	7' 1"	6' 5"	10' 5"	9' 4"	7' 11"
362S125-30	33	11' 0"	10' 2"	9' 1"	15' 6"	14' 4"	12' 9"	9' 10"	9' 1"	8' 2"	13' 11"	12' 9"	11' 2"	8' 0"	7' 4"	6' 7"	10' 10"	9' 10"	8' 5"
362S125-33	33	11' 5"	10' 7"	9' 5"	16' 2"	14' 10"	13' 2"	10' 3"	9' 5"	8' 5"	14' 5"	13' 2"	11' 6"	8' 3"	7' 8"	6' 10"	11' 3"	10' 2"	8' 11"
362S125-43	33	12' 8"	11' 8"	10' 5"	17' 9"	16' 5"	14' 4"	11' 3"	10' 5"	9' 3"	15' 9"	14' 4"	12' 6"	9' 1"	8' 4"	7' 6"	12' 2"	11' 1"	9' 8"
362S137-27	33	12' 0"	11' 2"	10' 0"	16' 3"	14' 9"	12' 11"	10' 10"	10' 0"	9' 0"	14' 3"	12' 11"	11' 3"	8' 9"	8' 2"	7' 4"	11' 0"	10' 0"	8' 9" e
362S137-30	33	12' 5"	11' 6"	10' 4"	16' 10"	15' 3"	13' 4"	11' 2"	10' 4"	9' 3"	14' 8"	13' 4"	11' 8"	9' 1"	8' 5"	7' 6"	11' 4"	10' 4"	9' 0"
362S137-33	33	12' 11"	11' 11"	10' 8"	17' 4"	15' 9"	13' 9"	11' 6"	10' 8"	9' 7"	15' 2"	13' 9"	12' 0"	9' 4"	8' 8"	7' 9"	11' 9"	10' 8"	9' 4"
362S137-43	33	14' 3"	13' 2"	11' 8"	18' 11"	17' 2"	15' 0"	12' 8"	11' 8"	10' 5"	16' 6"	15' 0"	13' 1"	10' 3"	9' 5"	8' 6"	12' 9"	11' 7"	10' 1"
362S162-33	33	14' 8"	13' 7"	12' 2"	18' 2"	16' 6"	14' 5"	13' 2"	12' 2"	10' 11"	15' 11"	14' 5"	12' 7"	10' 8"	9' 11"	8' 11"	12' 3"	11' 2"	9' 9"
362S162-43	33	16' 2"	14' 11"	13' 4"	19' 10"	18' 0"	15' 9"	14' 5"	13' 4"	11' 11"	17' 3"	15' 9"	13' 9"	11' 8"	10' 9"	9' 8"	13' 4"	12' 2"	10' 7"
400S125-18	33	9' 6" e	8' 9" e	7' 10" e	13' 0" e	11' 11" e	10' 5" e	8' 6" e	7' 10" e	6' 11" e	11' 6" e	10' 5" e	8' 11" e	6' 9" e	6' 2" e	5' 6" e	8' 7" e	7' 8" e	6' 5" e
400S125-27	33	10' 11"	10' 1"	9' 1"	15' 5"	14' 3"	12' 9"	9' 9"	9' 1"	8' 1"	13' 10"	12' 9"	11' 2"	7' 11"	7' 4"	6' 7"	10' 10"	9' 9"	8' 3"
400S125-30	33	11' 4"	10' 5"	9' 4"	16' 0"	14' 9"	13' 2"	10' 1"	9' 4"	8' 4"	14' 3"	13' 2"	11' 9"	8' 2"	7' 7"	6' 9"	11' 5"	10' 4"	8' 9"
400S125-33	33	11' 9"	10' 10"	9' 8"	16' 7"	15' 3"	13' 8"	10' 6"	9' 8"	8' 8"	14' 9"	13' 8"	12' 2"	8' 6"	7' 10"	7' 0"	11' 11"	10' 11"	9' 4"
400S125-43	33	13' 0"	12' 0"	10' 8"	18' 3"	16' 10"	15' 0"	11' 7"	10' 8"	9' 6"	16' 3"	15' 0"	13' 5"	9' 4"	8' 7"	7' 8"	13' 1"	12' 0"	10' 6"
400S137-27	33	12' 4"	11' 5"	10' 3"	17' 7"	16' 0"	13' 11"	11' 1"	10' 3"	9' 2"	15' 4"	13' 11"	12' 2"	9' 0"	8' 4"	7' 6"	11' 10"	10' 9"	9' 5" e
400S137-30	33	12' 9"	11' 10"	10' 7"	18' 2"	16' 6"	14' 5"	11' 5"	10' 7"	9' 6"	15' 10"	14' 5"	12' 7"	9' 3"	8' 7"	7' 9"	12' 3"	11' 1"	9' 9"
400S137-33	33	13' 3"	12' 3"	10' 11"	18' 9"	17' 0"	14' 11"	11' 10"	10' 11"	9' 10"	16' 5"	14' 11"	13' 0"	9' 7"	8' 11"	8' 0"	12' 8"	11' 6"	10' 1"
400S137-43	33	14' 7"	13' 6"	12' 0"	20' 5"	18' 6"	16' 2"	13' 0"	12' 0"	10' 9"	17' 10"	16' 2"	14' 2"	10' 6"	9' 8"	8' 8"	13' 9"	12' 6"	10' 11"
400S162-33	33	15' 0"	13' 11"	12' 6"	19' 8"	17' 10"	15' 7"	13' 6"	12' 6"	11' 2"	17' 2"	15' 7"	13' 7"	10' 11"	10' 2"	9' 1"	13' 3"	12' 0"	10' 6"
400S162-43	33	16' 7"	15' 3"	13' 8"	21' 4"	19' 5"	16' 11"	14' 9"	13' 8"	12' 2"	18' 8"	16' 11"	14' 10"	11' 11"	11' 0"	9' 11"	14' 5"	13' 1"	11' 5"
600S125-27	33	12' 5" e	11' 6" e	10' 4" e	17' 11" e	16' 6" e	14' 9" e	11' 2" e	10' 4" e	9' 4" e	16' 0" e	14' 9" e	13' 2" e	9' 2" e	8' 6" e	7' 7" e	12' 11" e	11' 10" e	10' 4" e
600S125-30	33	12' 9"	11' 10"	10' 8"	18' 5"	17' 1"	15' 3"	11' 6"	10' 8"	9' 7"	16' 7"	15' 3"	13' 8"	9' 5"	8' 9"	7' 10"	13' 4"	12' 4"	10' 11" e
600S125-33	33	13' 2"	12' 3"	11' 0"	18' 11"	17' 7"	15' 10"	11' 10"	11' 0"	9' 10"	17' 0"	15' 10"	14' 2"	9' 8"	8' 11"	8' 1"	13' 10"	12' 9"	11' 5"
600S125-43	33	14' 6"	13' 4"	11' 11"	20' 6"	19' 0"	17' 0"	12' 11"	11' 11"	10' 8"	18' 4"	17' 0"	15' 3"	10' 5"	9' 8"	8' 8"	15' 0"	13' 11"	12' 6"
600S137-27	33	14' 0" e	13' 0" e	11' 9" e	20' 2" e	18' 8" e	16' 9" e	12' 7" e	11' 9" e	10' 6" e	18' 1" e	16' 9" e	15' 0" e	10' 4" e	9' 7" e	8' 7" e	14' 8" e	13' 7" e	11' 10" e
600S137-30	33	14' 5"	13' 4"	12' 0"	20' 10"	19' 3"	17' 3"	13' 0"	12' 0"	10' 10"	18' 8"	17' 3"	15' 6"	10' 7"	9' 10"	8' 10"	15' 2"	14' 0"	12' 5" e
600S137-33	33	14' 11"	13' 9"	12' 5"	21' 5"	19' 10"	17' 10"	13' 4"	12' 5"	11' 2"	19' 3"	17' 10"	16' 0"	10' 11"	10' 2"	9' 2"	15' 8"	14' 6"	12' 11" e
600S137-43	33	16' 3"	15' 0"	13' 5"	23' 1"	21' 5"	19' 3"	14' 6"	13' 5"	12' 0"	20' 9"	19' 3"	17' 4"	11' 9"	10' 11"	9' 10"	16' 11"	15' 9"	14' 2"
600S162-33	33	16' 11"	15' 8"	14' 1"	24' 5"	22' 8"	20' 5"	15' 2"	14' 1"	12' 8"	22' 0"	20' 5"	18' 5"	12' 5"	11' 7"	10' 5"	18' 0"	16' 6"	14' 5" e
600S162-43	33	18' 5"	17' 0"	15' 3"	26' 4"	24' 4"	21' 11"	16' 6"	15' 3"	13' 8"	23' 8"	21' 11"	19' 9"	13' 5"	12' 5"	11' 2"	19' 4"	17' 11"	15' 9"

* Loads that exceed 10 psf limit require an approved CP60 coating.

"e" web stiffeners required at ends.

Typical Ceiling Details

See Ceiling Span Table Notes on page 47.

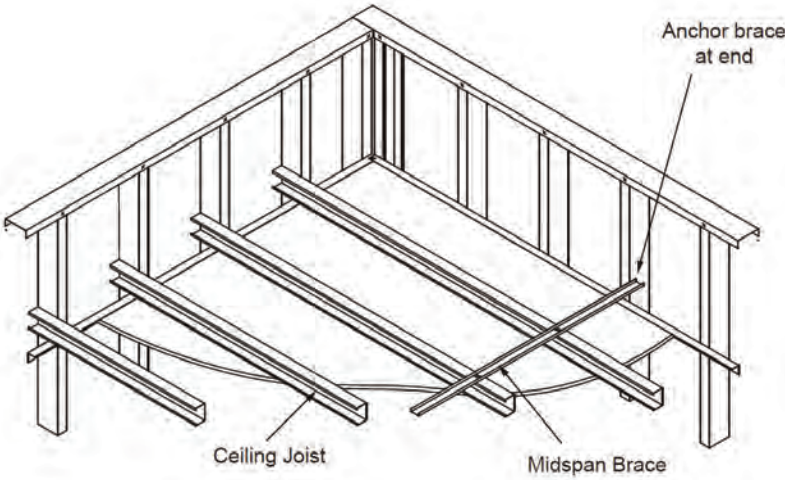

Midspan Bracing Details

Complies with 2009 & 2012 International Building Code (IBC)

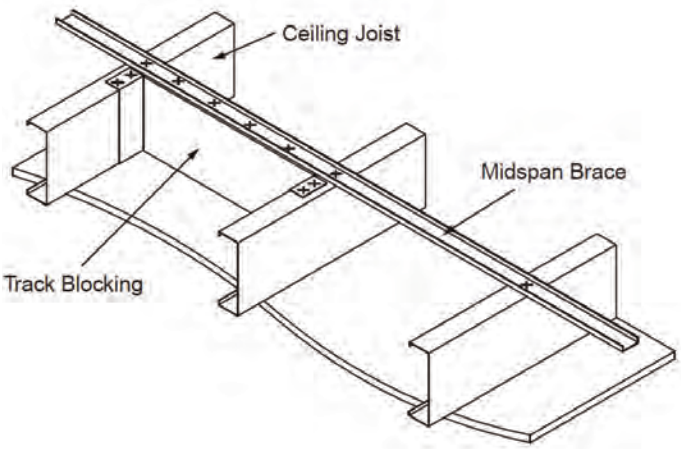

Channel Properties

U-Channel

U-Channel Section Properties											
Section	Design Thickness	Gross Properties						Effective Properties 33 ksi			
		Area	Weight	I_x	R_x	I_y	R_y	I_x	S_x	M_a	V_a
	(in)	(in^2)	(lb/ft)	(in^4)	(in)	(in^4)	(in)	(in^4)	(in^3)	(in-k)	(lb)
75U050-54	0.0566	0.087	0.30	0.007	0.288	0.002	0.155	0.007	0.019	0.45	315
150U050-54	0.0566	0.129	0.44	0.039	0.547	0.003	0.144	0.039	0.052	1.22	840
200U050-54	0.0566	0.157	0.54	0.079	0.709	0.003	0.136	0.079	0.079	1.87	1190
250U050-54	0.0566	0.186	0.63	0.139	0.866	0.003	0.128	0.139	0.111	2.64	1540

1. Inside bend radius taken as 3/32".
2. Moment of inertia given is for deflection calculations.
3. Effective properties based on F_y = 33 ksi.

U-Channel Allowable Ceiling Spans L/240																					
Section	Spans	4 psf					6 psf					13 psf*					15 psf*				
		Channel Spacing (in) o.c.					Channel Spacing (in) o.c.					Channel Spacing (in) o.c.					Channel Spacing (in) o.c.				
		24	36	48	60	72	24	36	48	60	72	24	36	48	60	72	24	36	48	60	72
75U050-54	Single	3' 11"	3' 5"	3' 1"	2' 10"	2' 8"	3' 5"	3' 0"	2' 8"	2' 6"	2' 4"	2' 7"	2' 4"	2' 1"	1' 11"	1' 9"	2' 6"	2' 2"	2' 0"	1' 10"	1' 8"
	Multiple	4' 10"	4' 2"	3' 10"	3' 7"	3' 4"	4' 2"	3' 8"	3' 4"	3' 1"	2' 10"	3' 3"	2' 9"	2' 4"	2' 1"	1' 11"	3' 1"	2' 7"	2' 2"	2' 0"	1' 9"
150U050-54	Single	5' 6"	4' 10"	4' 5"	4' 1"	3' 10"	4' 10"	4' 3"	3' 10"	3' 7"	3' 5"	3' 9"	3' 3"	3' 0"	2' 9"	2' 7"	3' 7"	3' 2"	2' 10"	2' 7"	2' 5"
	Multiple	7' 1"	6' 2"	5' 8"	5' 3"	4' 11"	6' 2"	5' 5"	4' 11"	4' 7"	4' 4"	4' 10"	4' 2"	3' 9"	3' 4"	3' 0"	4' 7"	4' 0"	3' 6"	3' 1"	2' 9"
200U050-54	Single	5' 10"	5' 1"	4' 8"	4' 4"	4' 1"	5' 1"	4' 6"	4' 1"	3' 10"	3' 7"	4' 0"	3' 6"	3' 2"	3' 0"	2' 10"	3' 10"	3' 4"	3' 1"	2' 10"	2' 8"
	Multiple	7' 5"	6' 6"	5' 11"	5' 6"	5' 2"	6' 6"	5' 8"	5' 2"	4' 10"	4' 7"	5' 1"	4' 5"	4' 0"	3' 9"	3' 6"	4' 10"	4' 3"	3' 10"	3' 7"	3' 2"
250U050-54	Single	6' 1"	5' 4"	4' 10"	4' 6"	4' 3"	5' 4"	4' 8"	4' 3"	4' 0"	3' 9"	4' 2"	3' 8"	3' 4"	3' 1"	2' 11"	4' 0"	3' 6"	3' 2"	3' 0"	2' 10"
	Multiple	7' 9"	6' 9"	6' 2"	5' 9"	5' 5"	6' 9"	5' 11"	5' 5"	5' 0"	4' 9"	5' 3"	4' 7"	4' 3"	3' 11"	3' 9"	5' 0"	4' 5"	4' 0"	3' 9"	3' 7"

* Loads that exceed 10 psf limit require an approved CP60 coating.

U-Channel Allowable Ceiling Spans L/360																					
Section	Spans	4 psf					6 psf					13 psf*					15 psf*				
		Channel Spacing (in) o.c.					Channel Spacing (in) o.c.					Channel Spacing (in) o.c.					Channel Spacing (in) o.c.				
		24	36	48	60	72	24	36	48	60	72	24	36	48	60	72	24	36	48	60	72
75U050-54	Single	3' 5"	3' 0"	2' 8"	2' 6"	2' 4"	3' 0"	2' 7"	2' 4"	2' 2"	2' 1"	2' 4"	2' 0"	1' 10"	1' 8"	1' 7"	2' 2"	1' 11"	1' 9"	1' 7"	1' 6"
	Multiple	4' 2"	3' 8"	3' 4"	3' 1"	2' 11"	3' 8"	3' 2"	2' 11"	2' 8"	2' 7"	2' 10"	2' 6"	2' 3"	2' 1"	1' 11"	2' 8"	2' 4"	2' 2"	2' 0"	1' 9"
150U050-54	Single	5' 6"	4' 10"	4' 5"	4' 1"	3' 10"	4' 10"	4' 3"	3' 10"	3' 7"	3' 5"	3' 9"	3' 3"	3' 0"	2' 9"	2' 7"	3' 7"	3' 2"	2' 10"	2' 7"	2' 5"
	Multiple	7' 1"	6' 2"	5' 8"	5' 3"	4' 11"	6' 2"	5' 5"	4' 11"	4' 7"	4' 4"	4' 10"	4' 2"	3' 9"	3' 4"	3' 0"	4' 7"	4' 0"	3' 6"	3' 1"	2' 9"
200U050-54	Single	5' 10"	5' 1"	4' 8"	4' 4"	4' 1"	5' 1"	4' 6"	4' 1"	3' 10"	3' 7"	4' 0"	3' 6"	3' 2"	3' 0"	2' 10"	3' 10"	3' 4"	3' 1"	2' 10"	2' 8"
	Multiple	7' 5"	6' 6"	5' 11"	5' 6"	5' 2"	6' 6"	5' 8"	5' 2"	4' 10"	4' 7"	5' 1"	4' 5"	4' 0"	3' 9"	3' 6"	4' 10"	4' 3"	3' 10"	3' 7"	3' 2"
250U050-54	Single	6' 1"	5' 4"	4' 10"	4' 6"	4' 3"	5' 4"	4' 8"	4' 3"	4' 0"	3' 9"	4' 2"	3' 8"	3' 4"	3' 1"	2' 11"	4' 0"	3' 6"	3' 2"	3' 0"	2' 10"
	Multiple	7' 9"	6' 9"	6' 2"	5' 9"	5' 5"	6' 9"	5' 11"	5' 5"	5' 0"	4' 9"	5' 3"	4' 7"	4' 3"	3' 11"	3' 9"	5' 0"	4' 5"	4' 0"	3' 9"	3' 7"

* Loads that exceed 10 psf limit require an approved CP60 coating.

1. Multiple span indicates two or more equal spans with channel continuous over interior supports.
2. Web crippling check is based on ¾" bearing at end and interior supports. No bearing stiffeners are required.
3. Listed spans are based on unbraced compression flanges.
4. See page 2 for additional table notes.

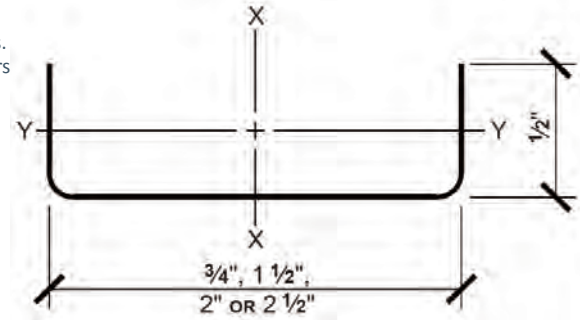

Furring Channel (Hat Channel)

Complies with 2009 & 2012 International Building Code (IBC)

Furring Channel Section Properties											
Section	F_y (ksi)	Design Thickness (in)	Gross Properties						Effective Properties		
			Area (in^2)	Weight (lb/ft)	I_x (in^4)	R_x (in)	I_y (in^4)	R_y (in)	I_x (in^4)	S_x (in^3)	M_a (in-k)
087F125-18	33	0.0188	0.070	0.239	0.009	0.356	0.035	0.710	0.009	0.016	26.41
087F125-27	33	0.0283	0.105	0.356	0.013	0.353	0.053	0.710	0.013	0.027	44.78
087F125-30	33	0.0312	0.115	0.391	0.014	0.353	0.058	0.710	0.014	0.031	50.47
087F125-33	33	0.0346	0.127	0.432	0.016	0.351	0.064	0.710	0.016	0.034	55.43
087F125-43	33	0.0451	0.162	0.550	0.020	0.348	0.082	0.711	0.020	0.042	69.17
150F125-18	33	0.0188	0.094	0.320	0.031	0.575	0.047	0.705	0.030	0.034	56.59
150F125-27	33	0.0283	0.140	0.477	0.046	0.572	0.070	0.705	0.046	0.057	93.74
150F125-30	33	0.0312	0.154	0.525	0.050	0.571	0.077	0.705	0.050	0.064	105.25
150F125-33	33	0.0346	0.171	0.581	0.055	0.570	0.085	0.705	0.055	0.070	115.92
150F125-43	33	0.0451	0.219	0.745	0.070	0.565	0.109	0.705	0.070	0.089	146.25

1. Hems and offset in flange, if present, are ignored.
2. Effective properties are given as the minimum value for positive or negative bending.
3. See page 2 for additional table notes.

Furring Channel Allowable Ceiling Spans L/240											
Section	F_y (ksi)	Spans	Uniform Load								
			4 psf			6 psf			13 psf		
			Spacing (in) o.c.			Spacing (in) o.c.			Spacing (in) o.c.		
			12	16	24	12	16	24	12	16	24
087F125-18	33	Single	5' 2"	4' 9"	4' 1"	4' 6"	4' 1"	3' 7"	3' 6"	3' 2"	2' 9"
		Multiple	6' 5"	5' 10"	5' 1"	5' 7"	5' 1"	4' 2"	4' 0"	3' 6"	2' 10"
087F125-27	33	Single	6' 0"	5' 5"	4' 9"	5' 3"	4' 9"	4' 2"	4' 0"	3' 8"	3' 2"
		Multiple	7' 5"	6' 9"	5' 10"	6' 6"	5' 10"	5' 2"	5' 0"	4' 6"	3' 8"
087F125-30	33	Single	6' 2"	5' 7"	4' 11"	5' 5"	4' 11"	4' 3"	4' 2"	3' 9"	3' 4"
		Multiple	7' 7"	6' 11"	6' 1"	6' 8"	6' 1"	5' 3"	5' 2"	4' 8"	3' 11"
087F125-33	33	Single	6' 4"	5' 9"	5' 1"	5' 7"	5' 1"	4' 5"	4' 4"	3' 11"	3' 5"
		Multiple	7' 10"	7' 2"	6' 3"	6' 10"	6' 3"	5' 5"	5' 4"	4' 10"	4' 1"
087F125-43	33	Single	6' 10"	6' 3"	5' 5"	6' 0"	5' 5"	4' 9"	4' 7"	4' 2"	3' 8"
		Multiple	8' 6"	7' 8"	6' 9"	7' 5"	6' 9"	5' 10"	5' 9"	5' 2"	4' 6"
150F125-18	33	Single	7' 11"	7' 2"	6' 3"	6' 11"	6' 3"	5' 6"	5' 4"	4' 10"	4' 2"
		Multiple	9' 9"	8' 10"	7' 6"	8' 6"	7' 6"	6' 0"	5' 8"	4' 9"	3' 8"
150F125-27	33	Single	9' 1"	8' 3"	7' 3"	7' 11"	7' 3"	6' 4"	6' 2"	5' 7"	4' 10"
		Multiple	11' 3"	10' 3"	8' 11"	9' 10"	8' 11"	7' 10"	7' 7"	6' 7"	5' 4"
150F125-30	33	Single	9' 5"	8' 6"	7' 5"	8' 2"	7' 5"	6' 6"	6' 4"	5' 9"	5' 0"
		Multiple	11' 7"	10' 6"	9' 2"	10' 2"	9' 2"	8' 0"	7' 10"	6' 12"	5' 8"
150F125-33	33	Single	9' 8"	8' 10"	7' 8"	8' 6"	7' 8"	6' 9"	6' 6"	5' 11"	5' 2"
		Multiple	12' 0"	10' 11"	9' 6"	10' 6"	9' 6"	8' 4"	8' 1"	7' 4"	5' 12"
150F125-43	33	Single	10' 6"	9' 6"	8' 4"	9' 2"	8' 4"	7' 3"	7' 1"	6' 5"	5' 7"
		Multiple	13' 0"	11' 9"	10' 3"	11' 4"	10' 3"	9' 0"	8' 9"	8' 0"	6' 8"

Furring Channel Allowable Ceiling Spans L/360											
Section	F_y (ksi)	Spans	Uniform Load								
			4 psf			6 psf			13 psf		
			Spacing (in) o.c.			Spacing (in) o.c.			Spacing (in) o.c.		
			12	16	24	12	16	24	12	16	24
087F125-18	33	Single	4' 6"	4' 1"	3' 7"	4' 0"	3' 7"	3' 2"	3' 1"	2' 9"	2' 5"
		Multiple	5' 7"	5' 1"	4' 5"	4' 11"	4' 5"	3' 11"	3' 9"	3' 5"	2' 10"
087F125-27	33	Single	5' 3"	4' 9"	4' 2"	4' 7"	4' 2"	3' 7"	3' 6"	3' 2"	2' 10"
		Multiple	6' 6"	5' 10"	5' 2"	5' 8"	5' 2"	4' 6"	4' 4"	4' 0"	3' 6"
087F125-30	33	Single	5' 5"	4' 11"	4' 3"	4' 8"	4' 3"	3' 9"	3' 8"	3' 4"	2' 11"
		Multiple	6' 8"	6' 1"	5' 3"	5' 10"	5' 3"	4' 7"	4' 6"	4' 1"	3' 7"
087F125-33	33	Single	5' 7"	5' 1"	4' 5"	4' 10"	4' 5"	3' 10"	3' 9"	3' 5"	3' 0"
		Multiple	6' 10"	6' 3"	5' 5"	6' 0"	5' 5"	4' 9"	4' 8"	4' 3"	3' 8"
087F125-43	33	Single	6' 0"	5' 5"	4' 9"	5' 3"	4' 9"	4' 2"	4' 0"	3' 8"	3' 2"
		Multiple	7' 5"	6' 9"	5' 10"	6' 6"	5' 10"	5' 2"	5' 0"	4' 6"	4' 0"
150F125-18	33	Single	6' 11"	6' 3"	5' 6"	6' 0"	5' 6"	4' 9"	4' 8"	4' 3"	3' 8"
		Multiple	8' 6"	7' 9"	6' 9"	7' 5"	6' 9"	5' 11"	5' 8"	4' 9"	3' 8"
150F125-27	33	Single	7' 11"	7' 3"	6' 4"	6' 11"	6' 4"	5' 6"	5' 4"	4' 10"	4' 3"
		Multiple	9' 10"	8' 11"	7' 10"	8' 7"	7' 10"	6' 10"	6' 8"	6' 0"	5' 3"
150F125-30	33	Single	8' 2"	7' 5"	6' 6"	7' 2"	6' 6"	5' 8"	5' 6"	5' 0"	4' 5"
		Multiple	10' 2"	9' 2"	8' 0"	8' 10"	8' 0"	7' 0"	6' 10"	6' 3"	5' 5"
150F125-33	33	Single	8' 6"	7' 8"	6' 9"	7' 5"	6' 9"	5' 10"	5' 9"	5' 2"	4' 6"
		Multiple	10' 6"	9' 6"	8' 4"	9' 2"	8' 4"	7' 3"	7' 1"	6' 5"	5' 7"
150F125-43	33	Single	9' 2"	8' 4"	7' 3"	8' 0"	7' 3"	6' 4"	6' 2"	5' 7"	4' 11"
		Multiple	11' 4"	10' 3"	9' 0"	9' 11"	9' 0"	7' 10"	7' 8"	6' 11"	6' 1"

1. Single spans taken as the minimum span based on moment, shear, web crippling, or deflection.
2. Multiple spans indicate two or more equal, continuous spans with span length measured support to support.
3. Web crippling check is based on 1" of bearing at end and interior supports.
4. Multiple spans taken as the minimum span based on moment, shear, web crippling, deflection, combined bending and shear, or combined bending and web crippling.
5. See page 2 for additional table notes.

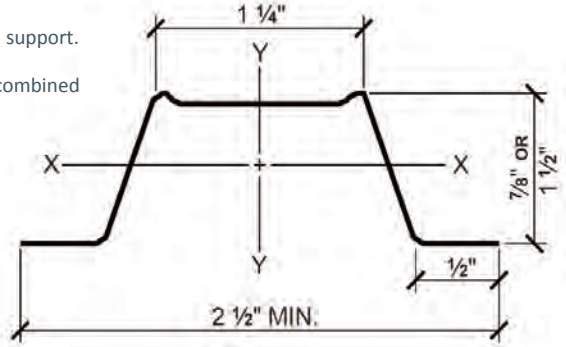

Screw Table Notes

1. Capacities based on section E4 of the AISI 2007 Specification. See table on page 2 for design thicknesses.
2. When connecting materials of different steel thicknesses or tensile strengths, use the lowest values. Tabulated values assume two sheets of equal thickness are connected.
3. Capacities are based on Allowable Strength Design (ASD) and include safety factor of 3.0.
4. Where multiple fasteners are used, screws are assumed to have a center-to-center spacing of at least 3 times the nominal diameter (d) of the screw.
5. Screws are assumed to have a center-of-screw to edge-of-steel dimension of at least 1.5 times the nominal diameter (d) of the screw.
6. Pull-out capacity is based on the lesser of pull-out capacity in sheet closest to screw tip, or tension strength of screw.
7. Pull-over capacity is based on the lesser of pull-over capacity for sheet closest to screw head, or tension strength of screw.
8. Values are for pure shear or tension loads. See AISI section E4.5 for combined shear and pull-over.
9. Screw Shear (Pss), tension strength (Pts), screw diameter and screw head diameter are from CFSEI Tech Note(F701-12).
10. Screw shear strength is the average value and tension strength is the lowest value listed in CFSEI Tech Note (F701-12).
11. Higher values for screw strength (Pss, Pts), may be obtained by specifying screws from a specific manufacturer.

Allowable Screw Connection Capacity (Pounds per Screw)																		
Thickness (Mils)	Design Thickness	F_y Yield (ksi)	F_u Tensile (ksi)	#6 Screw (Pss = 643 lb; Pts = 419 lb) (0.138" dia; ¼" head)			#8 Screw (Pss= 1278 lb; Pts = 586 lb) (0.164" dia; 5/16" head)			#10 Screw (Pss= 1644 lb; Pts = 1158 lb) (0.190" dia; 0.340" head)			#12 Screw (Pss= 2330 lb; Pts = 2325 lb) (0.216" dia; 0.340" head)			¼" Screw (Pss= 3048 lb; Pts = 3201 lb) (0.250" dia; 0.409" head)		
				Shear	Pull-Out	Pull-Over	Shear	Pull-Out	Pull-Over	Shear	Pull-Out	Pull-Over	Shear	Pull-Out	Pull-Over	Shear	Pull-Out	Pull-Over
18	0.0188	33	33	44	24	84	48	29	84	52	33	105	55	38	105	60	44	127
27	0.0283	33	33	82	37	127	89	43	127	96	50	159	102	57	79	110	66	191
30	0.0312	33	33	95	40	140	103	48	140	111	55	175	118	63	88	127	73	211
33	0.0346	33	45	151	61	140	164	72	195	177	84	265	188	95	132	203	110	318
43	0.0451	33	45	214	79	140	244	94	195	263	109	345	280	124	173	302	144	415
54	0.0566	33	45	214	100	140	344	118	195	370	137	386	394	156	216	424	180	521
68	0.0713	33	45	214	125	140	426	149	195	523	173	386	557	196	273	600	227	656
97	0.1017	33	45	214	140	140	426	195	195	548	246	386	777	280	389	1,016	324	936
118	0.1242	33	45	214	140	140	426	195	195	548	301	386	777	342	475	1,016	396	1,067
54	0.0566	50	65	214	140	140	426	171	195	534	198	386	569	225	313	613	261	752
68	0.0713	50	65	214	140	140	426	195	195	548	249	386	777	284	394	866	328	948
97	0.1017	50	65	214	140	140	426	195	195	548	356	386	777	405	562	1,016	468	1,067
118	0.1242	50	65	214	140	140	426	195	195	548	386	386	777	494	686	1,016	572	1,067

Weld Table Notes

1. Capacities based on section E2.4 (for fillet welds) and E2.5 (for flare groove welds) of the AISI S100 Specification.
2. When connecting materials of different steel thicknesses or tensile strengths, use the lowest values.
3. Capacities are based on Allowable Strength Design (ASD).
4. Weld capacities are based on E60 electrodes. For material thinner than 68 mil, 0.030" to 0.035" diameter wire electrodes may provide best results.
5. Longitudinal capacity is considered to be loading in the direction of the length of the weld.
6. For flare groove welds, the effective throat of weld is conservatively assumed to be less than 2t.
7. For longitudinal fillet welds, a minimum value of EQ E2.4-1, E2.4-2 and E2.4-4 was used.
8. For transverse fillet welds, a minimum value of EQ E2.4-3 and E2.4-4 was used.
9. For longitudinal flare groove welds, a minimum value of EQ E2.5-2 and E2.5-3 was used.

Allowable Weld Capacity (lbs/in)							
Thickness (Mils)	Design Thickness	F_y (ksi)	F_u (ksi)	Fillet Welds		Flare Groove Welds	
				Longitudinal	Transverse	Longitudinal	Transverse
43	0.0451	33	45	499	864	544	663
54	0.0566	33	45	626	1,084	682	832
68	0.0713	33	45	789	1,365	859	1,048
97	0.1017	33	45	1,125	1,269	-[1]	-[1]
54	0.0566	50	65	905	1,566	985	1,202
68	0.0713	50	65	1,140	1,972	1,241	1,514
97	0.1017	50	65	1,269	1,269	-[1]	-[1]

[1] Weld capacity for material thickness greater than 0.10" requires engineering judgment to determine leg of welds, W^1 and W^2.

Typical Details

Cold-Rolled Lateral Bracing

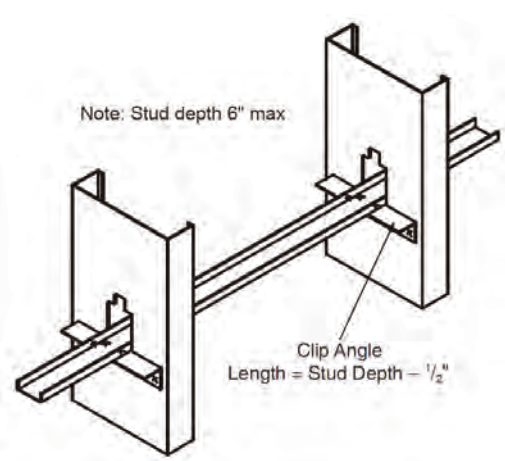

Wall Stud Web Stiffener

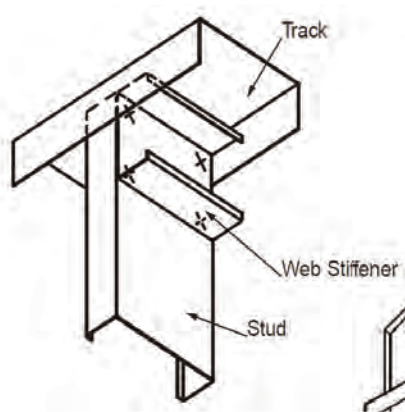

Flat Strap Lateral Bracing

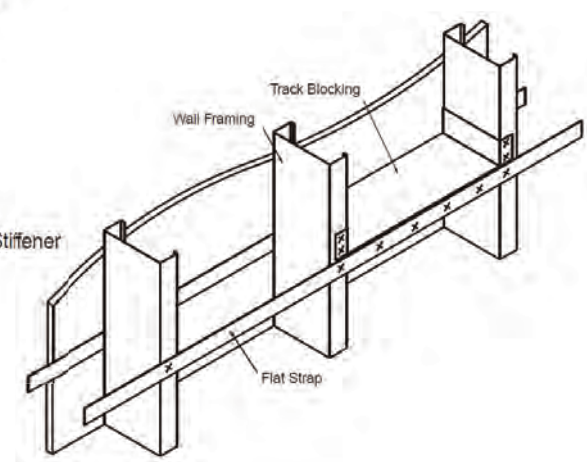

Terms, Conditions, and Limited Warranty

Product Use

Products in this catalog are designed and manufactured for the specific purposes shown, and should not be used in other applications unless approved by a qualified design professional. All modifications to products or changes in installation procedures should be made by a qualified design professional. The performance of such modified products or altered installation procedures is the sole responsibility of the design professional or installation contractor. The installation contractor and/or qualified design professional are responsible for installing all products in accordance with relevant specifications and building codes.

Customers modifying products or installation procedures, or designing Custom products for fabrication by The Steel Network, Inc. ("TSN") shall, regardless of specific instructions to the user, indemnify, defend, and hold TSN harmless for any and all claimed loss or damage occasioned in whole or in part by Custom or modified products or installation procedures.

Loads published on TSN's website and current product catalogs are for the described specific applications of properly installed products. Modifications to TSN products, improper loading or installation procedures, or deviations from recommended applications will affect TSN products' load-carrying capacities. TSN products are fabricated from hot-dipped galvanized steel for corrosion protection but will corrode and lose load-carrying capacity if exposed to salt air, corrosive fire-retardant chemicals, fertilizers, or other substances that may adversely affect steel or its galvanized coating. The current editions of TSN's catalogs and load tables published on this website may reflect changes in the allowable loads and configurations of some of TSN's products. This information supersedes information in earlier catalogs or technical reports. All earlier catalogs or technical reports should be discarded and reference made exclusively to the versions available at http://www.steelnetwork.com/Site/Catalogs. TSN may correct any clerical or typographical errors. All sales are subject to TSN's standard terms and conditions of sale.

Limited Warranty

TSN warrants its products to be free from defects in material or workmanship at the time of shipment. TSN standard catalog products are warranted for adequacy of design when used in accordance with design limits in this catalog and properly specified and installed. TSN products shall not be substituted with non-TSN products if it is part of a system. Substitution of a TSN product will immediately void any warranty claim made by Purchaser. This warranty excludes uses not in compliance with specific applications and installation procedures set forth in this catalog. Warranty claims must be made by Purchaser in writing within ninety (90) days of receipt of the products.

All warranty obligations of TSN shall be limited, at the sole discretion of TSN, to repair or replace the defective product(s). These remedies shall constitute TSN's sole obligation and sole remedy of purchaser under this warranty. In no event will TSN be responsible for incidental, consequential, indirect, exemplary, incidental, special, consequential, or punitive damages, or other losses or damages however caused, including, but not limited to, installation costs, lost revenue or lost profits. TSN's liability for damages shall in no event exceed the applicable portion of the purchase price for defective product(s).

Product defects that arise from acts of God, accidents, misuse, misapplication, improper installation, storage damage, negligence, or modification to product(s) or its components are specifically excluded from this warranty. Product defects that arise from Purchaser providing incorrect information to TSN, including but not limited to incorrect specifications such as incorrect dimensions, designs and/or loads, are also specifically excluded from this warranty. TSN does not authorize any person or party to assume or create for it any other obligation or liability in connection with Products except as set forth herein.

This Warranty is expressly in lieu of all other warranties, expressed or implied, including any warranties of merchantability or fitness for a particular purpose, all such other warranties being hereby expressly excluded.

Patented Technology

BackIt®, BridgeBar®, BridgeClip®, BuckleBridge®, CircleTrak®, DriftClip®, DriftCorner®, DriftTrak®, GripClip®, 600JAM®, 800JAM®, JamStud®, MidWall™, MasterClip®, NotchTrak®, PrimeWall®, 600SG®, 800SG®, SigmaStud®, SigmaTrak®, Step-Bushing Technology™, StiffClip®, StiffWall®, ThermaFast®, TightStrap®, VertiClip®, and VertiTrack® are trademarked products, and are patented or patent-pending technologies of TSN. Numerous TSN design configurations are patented and/or patent pending and are protected under US and International patent laws. Patent numbers include: #4,970,410; #4,970,411; #4,970,412; #4,970,413; #5,079,710; #5,467,566; #5,904,023; #5,906,080; #6,612,087; #6,701,689; #6,892,504; #7,104,024; #7,503,150; #7,559,519; #7,596,921; #7,634,889; # 7,788,878; #7,832,162; #7,836,657; # 8,132,383; #8,181,419; #8,205,402; #8,387,321 and #8,683,770.

Contact Information

North Carolina
(headquarters)
2012-A T.W. Alexander Drive
P.O. Box 13887
Durham, NC 27709
Phone: (919) 845-1025
Fax: (919) 845-1028

Texas
600 Lemens Avenue
Suite 120
Hutto, TX 78634
Phone: (512) 642-9603
Fax: (512) 857-1663

Nevada
1650 Helm Drive
Suite 1000 - 1200
Las Vegas, NV 89119
Phone: (702) 643-4330
Fax: (702) 643-4331

Web Site: www.steelnetwork.com
Email: support@steelnetwork.com
Toll Free Nationwide Phone:
(888) 474-4876

Copyright © 2016-2020 The Steel Network Inc. All rights reserved. No part of this publication may be reproduced in whole or in part by any method without the prior written consent of The Steel Network, Inc.