VertiClip® SLS Installation Instructions
Vertical Deflection @ Structure Bypass

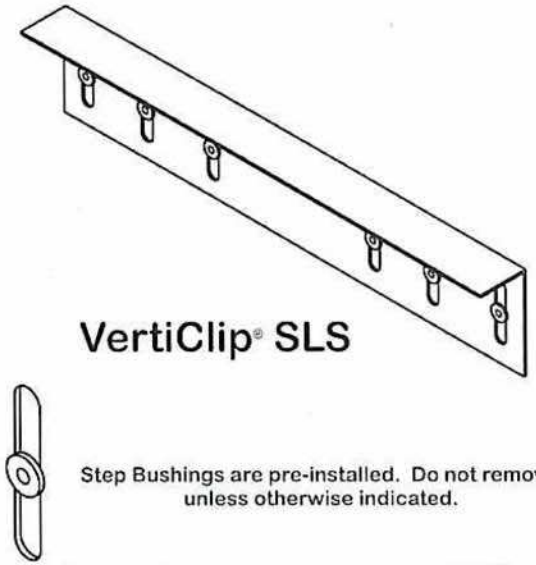

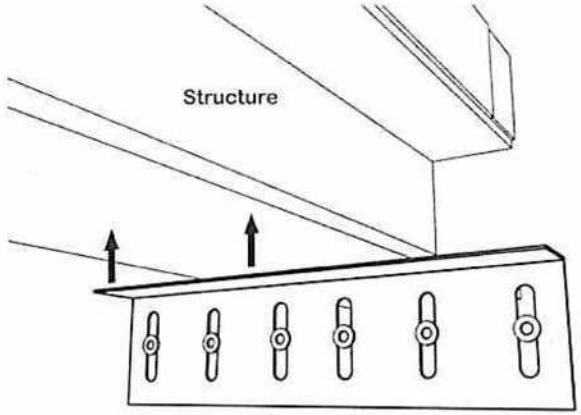

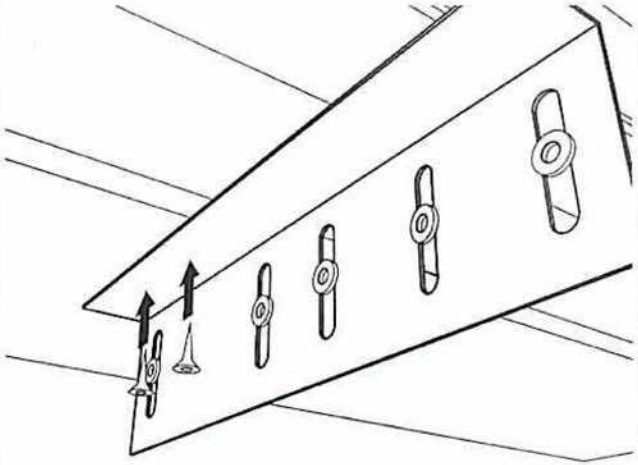

Refer to Design Drawings
for fastener type, size, and amount

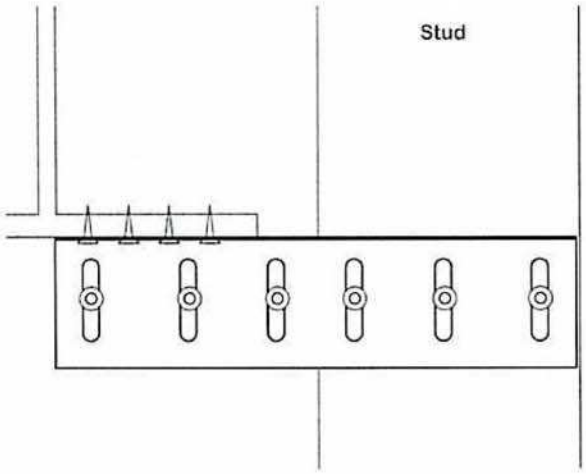

Install screw using a screw gun that does not exceed 2,500 rpm.

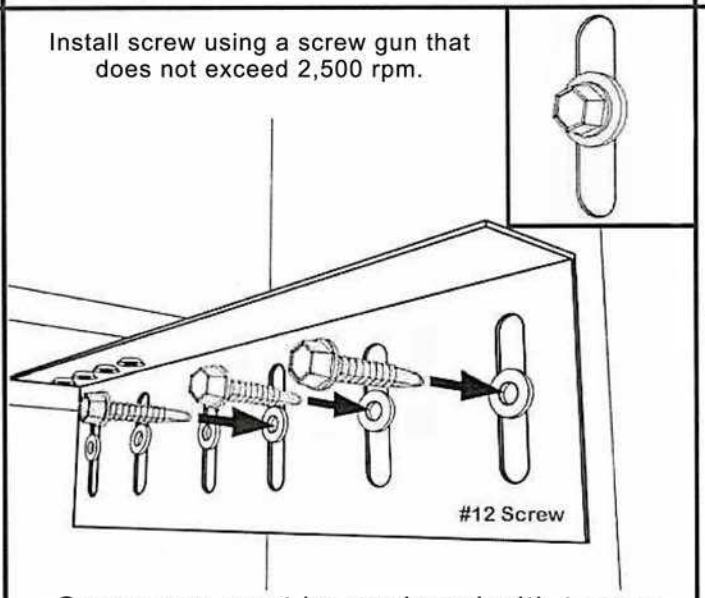

Screw gun must be equipped with torque limiting clutch to avoid fastener overdrive.

For Installation, Technical, or Submittal questions, contact TSN at (888) 474-4876.

Email us at support@steelnetwork.com

Visit www.steelnetwork.com and discover the value of each TSN Solution.

© 2012 The Steel Network, Inc. All Rights Reserved

Rev 1

US Patent #5,906,080

Products in this catalog are designed and manufactured for the specific purposes shown, and should not be used in other applications unless approved by a qualified design professional. All modifications to products or changes in installation procedures should be made by a qualified design professional. The performance of such modified products or altered installation procedures is the sole responsibility of the design professional or installation contractor. The installation contractor is responsible for installing all products in accordance with relevant specifications and building codes.