Tectum®

Ceiling & Wall Panels

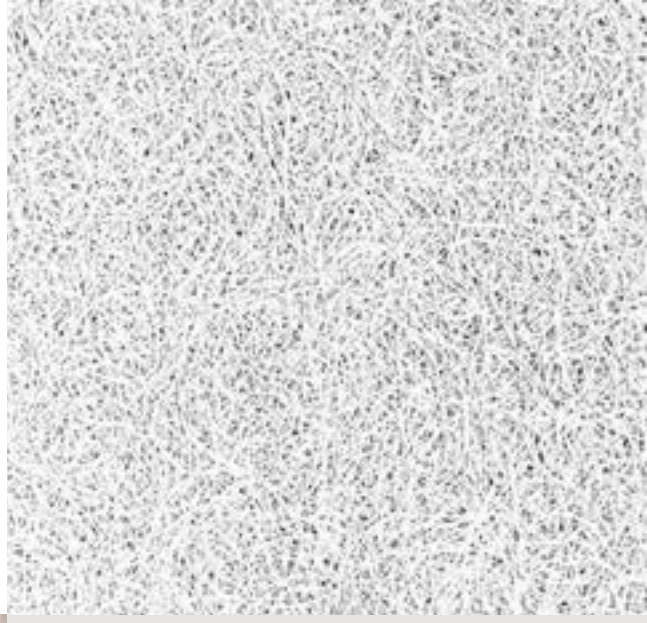

Armstrong®
World Industries

Tectum®

Ceiling & Wall Panels

Tectum® ceiling and wall panels provide durable, sustainable, acoustical solutions with unlimited design options. Tectum 1" thick panels are part of the Sustain® portfolio and meet the most stringent sustainability standards today. Tectum panels also have UL® Certified acoustics with acoustical testing and reporting that align with industry-wide best practices.

4 Sustainability

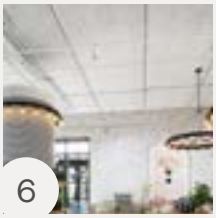

6 Direct-Attach & Direct-Attach High NRC

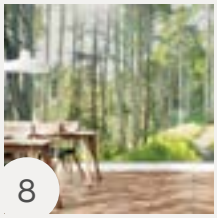

8 Tectum® Create!™

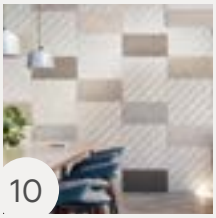

10 Tectum® DesignArt™

12 Lay-in & Tegular and Lay-in & Tegular High NRC

13 Finale™ & Finale™ PB

14 Blades & Baffles

15 Shapes & Clouds

Direct-Attach in custom colors; Kalamazoo Public Library, Kalamazoo, MI; David Milling Architects, Ann Arbor, MI

Tectum Direct-Attach Ceiling Panels; Temple School of Architecture, Philadelphia, PA; NELSON, Philadelphia, PA

The Sustain® Portfolio Contributes to Better Spaces

1" Thick Tectum® Panels in Standard Colors

Basalt (TBT)	Polar (TPO)	Oat (TOT)	Rainstorm (TRS)	Lilac (TLC)	Boxwood (TBW)
Feldspar (TFS)	Rose (TRO)	Riverstone (TRV)	Limestone (TLM)	Hay (THY)	Pacific (TPC)
Twilight (TTT)	Fern (TFN)	Topaz (TTZ)	Honeysuckle (THS)	Coffee (TCE)	Fossil (TFL)
Sandstone (TSS)	Mist (TMT)	Ocean (TOC)	Ivy (TIV)	Bronzite (TBZ)	Marigold (TMG)

Available as standard colors for Tectum® DesignArt™ product lines

Here's how:

- Contribute to LEED® v4 (including new Materials and Resources credits)
- Have Health Product Declarations (HPDs) which tell you what's in the products
- Are free of Red List chemicals per Living Building Challenge® 3.0 (including no added formaldehyde)
- Have Declare® labels – easy reference "nutrition labels"
- Meet California Department of Public Health (CDPH) low- emissions standards
- Have Environmental Product Declarations (EPDs) which tell you the impact of the products
- Contribute to WELL Building Standard™

SUSTAIN®
High Performance Sustainable Ceiling Systems

White (TWH)

Natural (TNA)

Custom Colors Available*

* Colors that are pre-qualified to meet Sustain portfolio requirements are available upon request. Other made-to-order colors must be evaluated if sustainability criteria is required. Lead time will increase.

Made from Nature

Tectum® products are made of fibers from one of the most sustainably harvested trees of its kind - the Wisconsin Aspen. The part of the Aspen that grows above ground can live between 40-150 years. The root system of the Aspen can survive thousands of years. Aspens quickly regenerate from their root system after the trunks have been harvested. Tectum panels are certified by the Forest Stewardship Council® (FSC), ensuring wood comes from responsibly managed forests.

FSC
www.fsc.org
FSC® C007626
The mark of responsible forestry

Tectum products are made of natural fibers and binders that are turned into unique, sound-absorbing, textured ceiling and wall panels that bring nature inside. Ideal for spaces where sustainability, durability, and noise control are needed.

Wisconsin Aspen Trees

Tectum High NRC 47-3/4" x 96" Direct-Attach wall panels in White

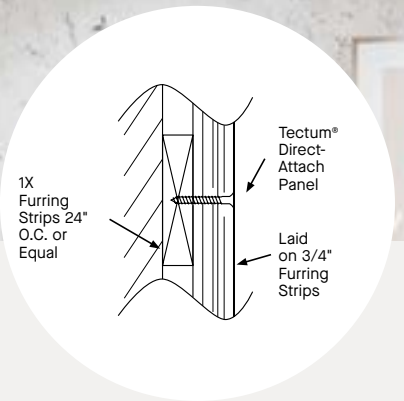

Direct-Attach & Direct-Attach High NRC Fit the Bill

Install panels directly to ceilings and walls to add durability and noise reduction to a wide variety of spaces using a sustainable solution.

- Tectum® Direct-Attach panels now have UL® Certified acoustics with acoustical testing and reporting that align with industry-wide best practices
- Tectum High NRC panels have a proprietary, factory-applied acoustical backing, adding sound absorption that is UL-certified
- 1" thick panels are part of the Sustain® and CleanAssure™ portfolios
- Excellent sound absorption – NRC up to 1.0 (mounting and thickness dependent)
- Retrofit solution for noise reduction
- Can be mechanically fastened to a wide variety of surfaces
- Install 1" thick Tectum on Trusses and I-Beams for added acoustics while maintaining an exposed structure visual on the deck
- Durable for heavy-use interiors, pools, and exterior-covered spaces

CLASSIFIED UL®

SUSTAIN®
High Performance Sustainable Ceiling Systems

Boys & Girls Club of Lancaster

Case Study

Location: Lancaster, PA

Product: Tectum Direct-Attach Wall Panels, Tectum Panel Art Shapes and Soundsoak Baffles

Architect: You Inspire™ Solutions Center

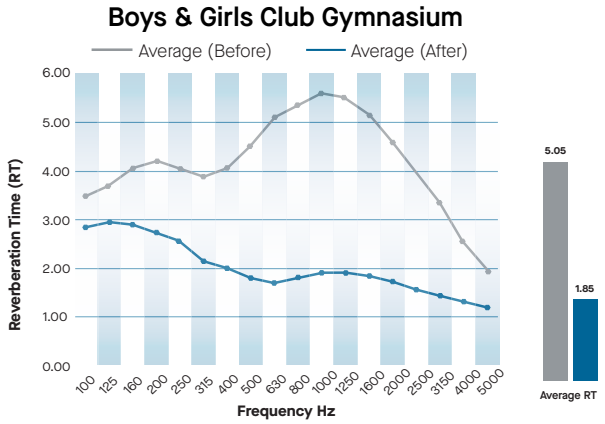

The Challenge

The gymnasium at the Boys & Girls Club of Lancaster is in use every day, not only for sports activities but for a variety of other functions as well. Its acoustic environment, however, was not always ideal. Acoustical testing showed that reverberation time in the gym was 5.05 seconds, far above the 2.00 seconds or less recommended for this type of space. As Karen Schloer, the Club's chief executive officer, notes, "The noise level was putting a real strain on the staff because they had to shout so often when trying to communicate with the kids."

The Solution

To solve the problem, Armstrong Ceiling and Wall Solutions installed more than 3,500 square feet of Tectum® Direct-Attach wall panels to the gym's masonry walls. The panels were chosen because of their ability to absorb both sound and the impact of basketballs, volleyballs, and other objects that hit the walls.

Aesthetically, the two-inch-thick, 2' x 4' panels are installed in ribbons of white and a custom blue that match the Club's colors. They start nearly 10 feet off the floor and continue up the wall another 18 feet.

In addition, a re-creation of the Boys & Girls Club logo is installed at each end of the gym. The 15-foot wide and 13-foot high visual of two interlocking hands was created using eight-inch triangular custom Tectum panels. The white triangles are one-inch thick, while the blue triangles are two-inches thick so that they stand out from the wall. Two rows of 12 Soundsoak® Baffles were installed in the center of the ceiling for added noise absorption.

Acoustically, the 2" Direct-Attach Tectum wall panels have a Noise Reduction Coefficient (NRC) of 0.70. Acoustical testing conducted after the installation of the combination acoustical treatment showed that reverberation time dropped to 1.85 seconds, a 63% reduction. According to Chief Operations Officer, Scott McLellan, "The difference is like night and day. The biggest takeaway is how much easier it is now for the staff to gain control of the space because the kids can hear directions much more clearly."

Looking back at the difference in the gym's acoustic comfort, McLellan adds, "The staff simply didn't realize how bad it was because they didn't realize how good it could be."

Tectum® Create!™ Direct-Attach
Fit the Aesthetic

Transform interior spaces with distinctive image depth and personality with texture-rich custom panels.

- 1" thick Tectum® Create!™ Direct-Attach panels are now available in four standard designs, or you can submit your own custom artwork
- Repeat panel patterns that can span wall surfaces in both vertical and horizontal directions
- Marry art with excellent sound absorption – NRC up to 0.85 (mounting method dependent)
- Panel sizes include 23-3/4" x 48" and 47-3/4" x 96" with long and short beveled edges (no additional custom sizes available)
- Panels can be directly attached to a wide variety of interior wall surfaces
- Tectum Create! panels are part of the Sustain® and CleanAssure™ portfolios

SUSTAIN®
High Performance Sustainable Ceiling Systems

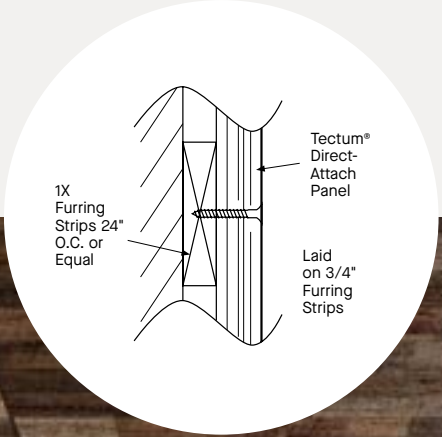

1" thick Tectum Create! Direct-Attach 47-3/4" x 96" Rustic Plank ceiling & wall panels

1" thick Tectum® Create!™ Direct-Attach 47-3/4" x 96" custom wall panels

DesignArt™
Fit to Transform

Combining texture, shapes, linear designs, patterns, and colors with sustainable, acoustical Tectum® DesignArt™ ceiling and wall panels.

- Mix and match 30 standard Shapes and 29 standard Lines to create your own unique visual
- 24 standard colors inspired by nature
- Over 100 variations of pre-designed patterns ready to add energy and beauty to your interiors
- Tectum DesignArt – Lines High NRC panels have a proprietary, factory-applied acoustical backing
- new Tectum® DesignArt™ – Lines Finale™ PB direct-attach panels feature integrated furring strips and a plant-based binder infill for excellent acoustic performance and aesthetics
- 1" thick panels are part of the Sustain® and CleanAssure™ portfolios
- Tectum® DesignArt™ panels have UL® Certified acoustics with testing and reporting that align with industry-wide best practices
- Color-coordinated suspension systems available

CLASSIFIED UL

SUSTAIN®
High Performance Sustainable Ceiling Systems

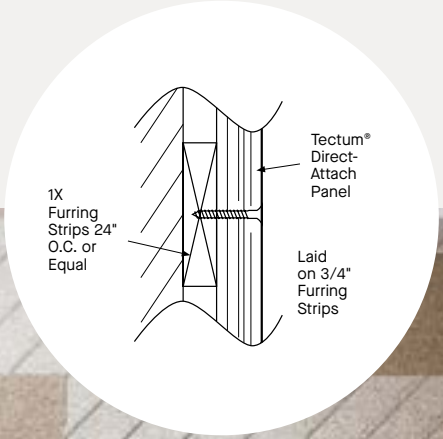

Tectum DesignArt – Shapes Direct-Attach and Tectum DesignArt – Lines Direct-Attach Wall panels pattern TDSL - 0005

Our Town Brewery

The Challenge

Our Town Brewery, a 6,000-square-foot pub housed in a former auto showroom, opened in September 2020. According to owner Rob Tarves, a common complaint soon after opening was acoustics. “Patrons said they couldn’t hear themselves think,” he says. “In addition, we weren’t able to conduct trivia contests as we had hoped and had to limit our live music choices.” Improving acoustics while maintaining the brewery’s aesthetic thus became the challenge.

Case Study

Location: Lancaster, PA

Product: Tectum DesignArt – Shapes

The Solution

To help remedy the situation, Tarves contacted Armstrong Ceiling & Wall Solutions. “The space was full of flat surfaces including picture windows on three sides,” Armstrong designer Marie DePaul explains. “Plus, the owner wanted to preserve the brewery’s 91-year-old tin ceiling, which meant there were not a lot of surfaces to treat acoustics. The challenge was to install enough acoustic treatment to make a difference and also contribute to the design of the space.”

Selected for use were Armstrong Tectum® DesignArt™ - Shapes, which are direct-attach wall panels. The durable panels feature a unique textured wood fiber visual and are ideally suited for high-traffic interiors. Tectum DesignArt panels transform interior spaces by combining texture, shapes, patterns, and colors with sustainability and acoustics. As part of the Armstrong Sustain® portfolio, standard Tectum DesignArt panels meet the most stringent industry sustainability compliance standards today.

The focal point of the space is now a 33-foot-long by 7-foot-high mosaic-type wall pattern above the bar. It was created using Tectum DesignArt – Shapes and consists of 48 full hexagons and 37 partial hexagons in Polar, the standard color, and three custom colors: light gray, medium gray, and dark gray. Hexagonal panels in a blue/green color were installed on the side and front walls.

All together, 167 two-foot-wide Tectum DesignArt hexagons were installed. The colors were chosen to match the pub’s brand design and to complement the existing aesthetics. “The ability to work with a brand’s standards to coordinate custom colors was key,” DePaul adds.

According to Tarves, installation went quickly and smoothly. One reason was that each panel was labeled as to where it went in the pattern. The panels were installed on 1" thick furring strips which results in a Noise Reduction Coefficient (NRC) of 0.85, meaning they absorb 85% of the sound that strikes them.

Once complete, Tarves notes both the patrons and the staff noticed the improvement. Acoustical tests confirmed it. Reverberation time fell from 4.94 seconds to 2.88 seconds, a 42% reduction. As Tarves says, “The efficacy of the panels was quickly evident. You could hear the difference as each panel was installed.

“We wanted the space to look great and control sound at the same time,” Tarves adds. “The Tectum DesignArt panels accomplished that by combining aesthetics and acoustics.”

Lay-in & Tegular and Lay-in & Tegular High NRC Fit For Purpose

Durable, sustainable, noise control for spaces requiring acoustics and design flexibility.

- Tectum® Lay-in and Tegular panels now have UL® Certified acoustics with acoustical testing and reporting that align with industry-wide best practices
- Tectum High NRC panels have a proprietary, factory-applied acoustical backer, adding sound absorption that is UL-certified
- 1" thick panels are part of the Sustain® and CleanAssure™ portfolios
- Tegular panels have Total Acoustics® Performance (NRC 0.90 CAC 35) with 1713 infill panel
- Durable for heavy-use interiors
- Lay-In and Tegular panels are part of the automated ceiling solutions in ProjectWorks®

CLASSIFIED UL

SUSTAIN®
High Performance Sustainable Ceiling Systems

TOTAL ACOUSTICS®
Sound Absorption (NRC) + Sound Blocking (CAC)

ProjectWorks®

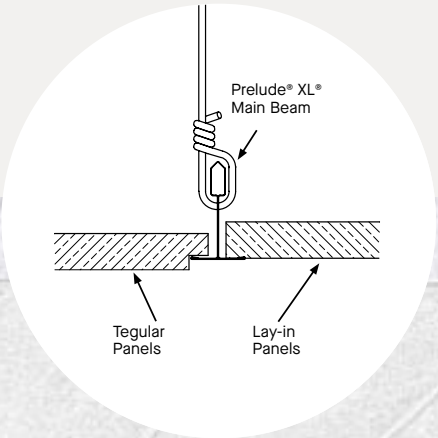

Tectum Tegular 24" x 48" panels in White with Prelude® XL® 15/16" suspension system

Tectum Finale PB ceiling and wall panels in White

Finale™ & Finale PB
A Sound Fit

Tectum® Finale™ and Finale PB ceiling and wall panels have built-in furring pieces with factory-filled panels that provide maximum sound control and install 2.5x faster than C-20 mount Direct-Attach panels for reduced installation costs. A perfect way to add acoustics to exposed structure spaces.

- Tectum Finale and Finale PB now have UL® Certified acoustics with acoustical testing and reporting that align with industry-wide best practices
- Finale PB panels are manufactured with a plant-based binder infill
- Finale PB panels are part of the Sustain® portfolio
- All panels are part of the CleanAssure™ portfolio
- Select products are included in the FAST134 program – ready to ship in 4 weeks or less
- Excellent sound absorption – NRC up to 0.90 (mounting method dependent)
- new Add routed lines and color to your design with Tectum® DesignArt™ – Lines Finale™ PB direct-attach panels

CLASSIFIED UL

SUSTAIN®
High Performance Sustainable Ceiling Systems

Blades & Baffles
Fit to the Max

Vertical elements control acoustics with an upscale linear visual.

- Upscale linear visual adds acoustics and aesthetics to any space
- Noise absorption up to 0.60 Sabins/SF
- Custom shapes and sizes available to meet your project needs
- Mounting channels available to extend panel length beyond four feet

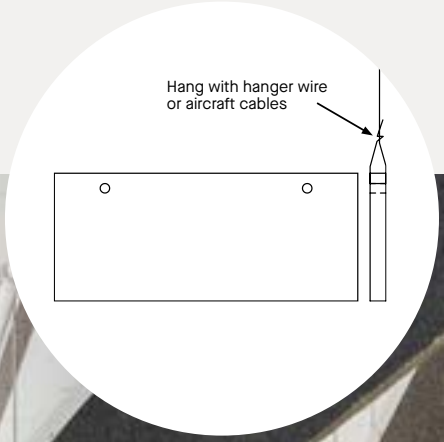

Tectum® Blades custom acoustical panels;
Cisco Umbrella, San Francisco, CA

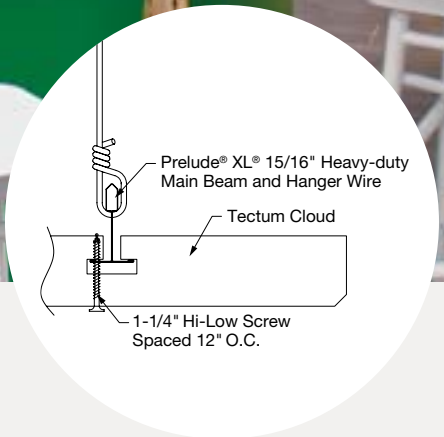

Tectum® Clouds; Retail Me Not, Austin, TX; STG Design, Austin, TX

Shapes & Clouds
Flexible Fit

Shapes and Clouds offer design flexibility in a floating system.

- Noise absorption up to 0.50 Sabins/SF
- Wide variety of color options available
- Installs with Prelude® XL® 15/16" heavy-duty main beams
- Square or radius edges
- Made in sizes up to 4' and can be suspended or direct-attached to drywall grid system

Fabric Walls
Twice the Fit

Tectum® fabric walls do double duty, providing both acoustics and a tackable surface for displays and bulletin boards.

- Abuse-resistant, fabric-wrapped panels attach directly to walls
- Excellent Noise Absorption – NRC up to 0.90
- Mounting is quick and easy using internal spline system
- Durable fabric options available

Fabric Wall – Decor Clip

Tectum Fabric wall panels; Southland Christian Church, Lexington, KY

1" thick Tectum® Create!™ Direct-Attach 47-3/4" x 96" custom wall panels

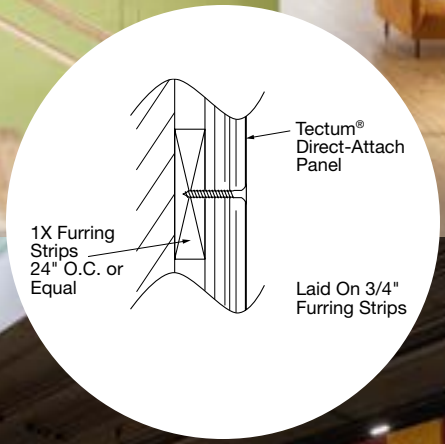

TECTUM®
Made to Fit

Tectum® ceiling and wall panels are available in a variety of sizes, shapes, forms, and colors. Select from a natural factory finish, white, or made-to-order colors. Panels can be field painted up to six times without impacting acoustic or fire performance. Tectum panels are made to fit your design needs.

Tectum® DesignArt™ - Lines Direct-Attach Wall Panels

Acoustics

Product	Panel Thickeness	Weight (SF)	Mounting NRC Rating Suspended	A Mounting	D-20 Mounting	C-20 Mounting	C-40 Mounting
			NRC	NRC	NRC	NRC	NRC
Tectum® Blades & Baffles	1"	1.63 LBS/SF	0.40 (Sabins/SF)	–	–	–	–
	1-1/2"	2.53 LBS/SF	0.50 (Sabins/SF)	–	–	–	–
Tectum® Create!™ Direct-Attach Ceiling & Wall Panels	1"	1.63 LBS/SF	–	0.40	0.45	0.80	0.85
Tectum Direct-Attach Ceiling & Wall Panels	1"	1.63 LBS/SF	I-Beam: 3.8 Truss: 2.9 (Sabins/24 × 48 × 1" Tectum panel)	0.40	0.45	0.80	0.85
Tectum® DesignArt™ – Shapes & Tectum DesignArt – Lines Direct-Attach Ceiling & Wall Panels	1"	1.63 LBS/SF	–	0.40	0.45	0.80	0.85
Tectum DesignArt – Lines High NRC Direct-Attach Ceiling & Wall Panels	1"	1.63 LBS/SF	–	–	0.60	–	–
Tectum DesignArt – Lines Tegular Ceiling Panels	1"	1.63 LBS/SF	0.40	–	–	–	–
Tectum DesignArt – Lines High NRC Tegular Ceiling Panels	1"	1.63 LBS/SF	0.85	–	–	–	–
Tectum® DesignArt™ – Lines Finale™ PB Direct-Attach Ceiling & Wall Panels	1" Panel with Plant-based Binder infill & 1" furring	3.1 LBS/SF	–	0.80	0.85	–	0.90
Tectum® Finale™ Ceiling & Wall Panels	1" Panel with acoustical insert & 1" Furring	3.00 LBS/SF	–	0.85	0.90	–	–
Tectum Finale PB Ceiling & Wall Panels	1" Panel with Plant-based Binder infill & 1" furring	3.00 LBS/SF	–	0.80	0.85	–	–
Tectum Fabric Walls	1"	1.63 LBS/SF	–	0.50	0.60	–	0.90
Tectum High NRC Direct-Attach Ceiling & Wall Panels	1"	1.63 LBS/SF	–	–	0.60	–	–
Tectum High NRC Lay-in & Tegular Ceiling Panels	1"	1.63 LBS/SF	0.85	–	–	–	–
Tectum Lay-in & Tegular Ceiling Panels	1"	1.63 LBS/SF	0.40	–	–	–	–
	1" w/ 1713 infill	2.94 LBS/SF	0.90/CAC 33	–	–	–	–
	1-1/2"	2.53 LBS/SF	0.50	–	–	–	–
Tectum Shapes & Clouds	1-1/2"	2.55 LBS/SF	0.50 (Sabins/SF)	–	–	–	–

Edge Detail Recommendations

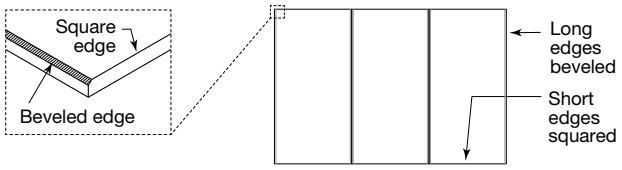

NOTE: Use Beveled Edge/Square End for the above panel layout.

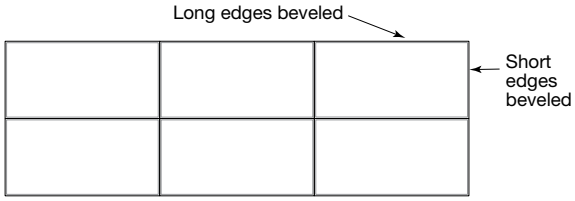

NOTE: Stacked bond patterns are possible, but not recommended. Field trimming panels may be required to achieve desired fit and alignment.

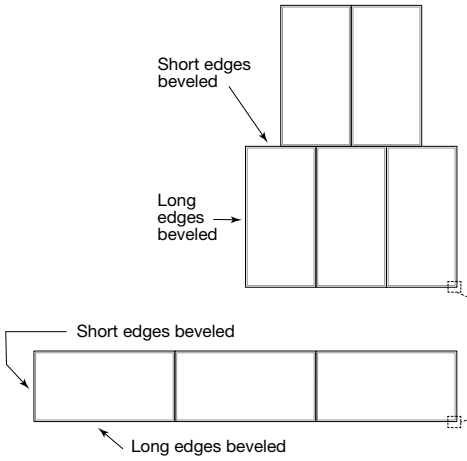

NOTE: All exposed edges of the panel are factory painted.

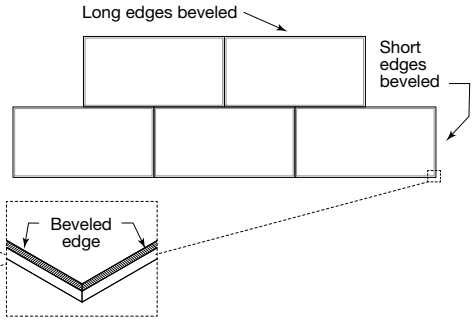

NOTE: Use Beveled Edge/Beveled End panels for all adjoining panel installations.

Take the Next Step

877 276-7876

Customer Service Representatives
7:45 a.m. to 5:00 p.m. EST
Monday through Friday

TechLine – Technical information, detail drawings, CAD design assistance, installation information, other technical services – 8:00 a.m. to 5:30 p.m. EST, Monday through Friday. FAX 1 800 572 8324 or email: techline@armstrongceilings.com

armstrongceilings.com/commercial

Latest product news

Standard and custom product information

Online catalog

CAD, Revit®, SketchUp® files

A Ceiling for Every Space® Visual Selection Tool

Product literature and samples – express service or regular delivery

Contacts – reps, where to buy, who will install

ProjectWorks®

armstrongceilings.com/projectworks

The power of ProjectWorks® Design and Pre-Construction Service

Mix and match different sizes, shapes, colors, and materials to reinvent your standard, specialty, or custom ceiling.

Visit our pattern gallery online to see ideas for your next project at armstrongceilings.com/patterngallery

Contact your local representative to get a design started! Not sure who your local rep is? Visit armstrongceilings.com/findarep

FSC® is a registered trademark of FSC Forest Stewardship Council®, A.C., license code FSC-C007626; LEED® is a registered trademark of the U.S. Green Building Council; Revit® is a registered trademark of Autodesk, Inc.; SketchUp® is a registered trademark of Trimble, Inc.; Declare® is a registered trademark and Living Building Challenge® (LBC) are registered trademarks of the International Living Future Institute®; WELL Building Standard™ is a trademark of The International WELL Building Institute (IWBI); UL® and UL Certified are registered trademarks of UL LLC
All other trademarks used herein are the property of AWI Licensing LLC and/or its affiliates
© 2024 AWI Licensing LLC · Printed in the United States of America

armstrongceilings.com/tectum

Armstrong® World Industries

BPCS-5496-324